WACKER NEUSON

System Handbook

Telehandlers

TH627

Machine model	**418-02**
From serial no.	**418 02 0011**
Version	**1.0**
Doc. Number	**1000363144**
Language	**[en]**

Legend	
Original System Manual	
Version	1.0
Date	05/2016
Document	SHB 41802 *

Copyright – 2016 Kramer-Werke GmbH

Printed in Germany

All rights reserved, in particular the copyright, the right of reproduction and the right of distribution applicable worldwide.

This document may be used by the receiver only for the designated purpose. It may in no way be duplicated or translated in any other language, in whole or in part, without prior permission in writing from the manufacturer.

No reproduction or translation of this publication, in whole or part, without the written consent of KRAMER-WERKE GmbH.

Violations of legal regulations, in particular of the copyright protection, shall be subject to civil and criminal prosecution.

KRAMER-WERKE GmbH keep abreast of the latest technical developments and constantly improve their products. For this reason, we may from time to time need to make changes to figures and descriptions in this documentation that do not reflect products that have already been delivered and that will not be implemented on these machines.

Technical data, dimensions and weights are only given as an indication. Responsibility for errors or omissions not accepted.

The cover features the machine with possible optional equipment.

Exclusively built for Wacker Neuson SE.

Kramer-Werke GmbH

Wacker-Neuson-Str. 1

D-88630 Pfullendorf

Tel. 0080090209020
E-mail info@kramer.de
www.kramer.de

E Introduction

E.1 About this System Manual

Working with System Manual

This System Manual is intended to help ensure continual operational functionality. This ensures the high value of the machine through careful maintenance and after-sales monitoring.

The experiences of our factory personnel and service technicians are summarized in this System Manual.

Every sequence of images shows the procedure of a repair process. The provided text contains necessary instructions for adjustment, application of special tools, etc.

Major repair procedures are described in such a way that smaller sub-tasks can also be performed individually following the respective procedures.

The manual is appended according to further technical development of the machines and therefore is kept up-to-date to serve as a reference.

For reasons of safety and security, always compare the specified values and capacities with the latest Operator's Manual of the respective machine.

Deviations of images are possible.

Information

Careful and prudent working is the best way to avoid accidents!

Explanation of symbols and abbreviations

The indication **left** or **right** in the descriptions always refers to the travel direction of the machine.

Symbols	Explanation
•	Identifies a general list
1 2	Identifies a list in a table (position numbers)
1. 2.	Identifies activities that must be performed in a certain order
➥	Identifies results
►	Identifies things to be avoided in the warning and safety instructions
Abbreviations	**Explanation**
Fig.	Figure
resp.	respectively
i.e..	that is
etc.	et cetera
poss.	possibly
if nec.	if necessary
o.s.	or similar
etc.	et cetera
e.g.	for example
Order no.	Order, item or part number
o/h	Operating hours
MIN.	minimum
MAX.	maximum
Weight %	Weight percentage
LED	Light Emitter Diode
sec	Seconds
Rpm	Revolution per minute
l/min	Litres per minute
(WSxx)	Wrench size, for example WS13 = wrench size 13

(opt)	Option
SW	Quickhitch (loader unit)
Agricultural/forestry certification	Agricultural or forestry registration
ROPS	Roll Over Protective Structure
FOPS	Falling Object Protective Structure
Trucks	Trucks
ECU	“Electronic Control System Unit” (electronic control unit for monitoring and operating electronic components)
ECS	“Emission Control System” (exhaust-gas treatment system)
EGR	“Exhaust Gas Recirculation” (system for emission reduction)

Repair instructions

Technical data

Technical data, dimensions and weights are only given as an indication. Subject to technical modifications. Responsibility for errors or omissions not accepted.

Cause of damage

Identify the cause of damage, avoid further damage, and secure the machine.

Spare parts

Use Wacker Neuson original spare parts and corresponding Wacker Neuson special tools.

When ordering spare parts or submitting technical queries, always provide the machine serial number and, in case of the diesel engine and/or attachments, also the respective serial numbers. This is required to prevent the delivery of wrong spare parts.

Only use Wacker Neuson original spare parts, accessories and attachments which have been checked and approved by Wacker Neuson. This is the only way to maintain the design-specific properties and functional capability of the Wacker Neuson machine. Wacker Neuson original spare parts also help maintain the active and/or passive driving safety and the work safety of the machine.

Wacker Neuson shall not be liable whatsoever for any damage occurring due to the use of non-Wacker Neuson spare parts, non-Wacker Neuson accessories and non-Wacker Neuson attachments.

Diesel engine

Always disconnect the battery cable or operate the battery master switch before working on the diesel engine.

Gearbox

When disassembling the gearbox, always drain the gear oil first before removing the gears. Separate parts that are interlocked with a soft-metal or plastic hammer.

Required tools and screw connections

- Standard tools, electric power tools, pit
- 2 x 60 bar (900 psi) pressure gauge
- 2 x 600 bar (9000 psi) pressure gauge
- 1 x 250 bar (4000 psi) pressure gauge
- 2 x micro screw connection 7/16 UNF with O-ring
- 2 x micro screw connection M12x1.5 with O-ring
- 2 x micro screw connection S25 (high pressure up to 600 bar (9000 psi))
- 2 x sealing plugs S25 (high pressure up to 600 bar (9000 psi))
- 1 x diesel engine speed sensor (or diagnosis system)
- 1 x multimeter (or diagnosis system)
- Allen key set with spherical lock (retaining function)

Procedure

Replacement of components/warranty handling

Basically, approval is required for replacing the variable displacement pump or the high-speed gearbox. Please always make a note of the name of the person giving the approval and the date of it on the test report. If you are replacing a pump or the gearbox, the following documents must be sent back in paper form together with the old part:

- Standard test report “**Before troubleshooting**”
- Hydraulic pump report
- High-speed gearbox report (only if high-speed gearbox is replaced)
- Standard test report "**After troubleshooting**"

E.2 Tightening torques

General tightening torques

Screw dimensions	Torque settings [1] in Nm (ft.lb)		
	8.8	10.9	12.9
M4	3 (2,2)	4 (3)	5 (3,7)
M5	5,5 (4,1)	8 (5,9)	10 (7,4)
M6	10 (7,4)	14 (10,3)	16 (11,8)
M8	23 (17)	34 (25,1)	40 (29,5)
M10	46 (33,9)	67 (49,4)	79 (58,3)
M12	79 (58,3)	115 (84,8)	135 (99,6)
M14	125 (92,2)	185 (136,4)	220 (162,3)
M16	195 (143,8)	290 (213,9)	340 (250,8)
M18	280 (206,5)	400 (295)	470 (346,7)
M20	395 (291,3)	560 (413)	660 (486,8)
M22	540 (398,3)	760 (560,5)	890 (656,4)
M24	680 (501,5)	970 (715,4)	1150 (848,2)
M27	1000 (737,6)	1450 (1069,5)	1700 (1253,9)
M30	1350 (995,7)	1950 (1438,2)	2300 (1696,4)

1. These values are valid for screws with untreated, non-lubricated surfaces.

Torque values for metric coarse-pitch thread

Screws/bolts and nuts

The tightening torques specified below only apply if:

- If a coefficient of friction of μ ges = 0.14 is attained in combination with the thread lubricant. A surface protection, for example A3C+L, Dacromet or Termosil, is recommended for this.
- No other tightening torque is specified in the text.
- No additional screw locks, for example MK screws or a liquid screw lock, are used.

Torque settings in Nm (ft.lb)				
Property class		**8.8**	**10.9**	**12.9**
Designation	**Dimensions**			
Hex head screws ISO 4014 to ISO 4018 Cheese-head screws ISO 4762 Hexagon nuts ISO 4032	M4	2,9 (2,1)	4,3 (3,2)	5 (3,7)
	M5	5,8 (4,3)	8,5 (6,3)	10 (7,4)
	M6	10 (7,4)	14,5 (10,7)	17 (12,5)
	M8	24,5 (18,1)	36 (26,6)	42 (31)
	M10	48,5 (35,8)	71 (52,4)	83,5 (61,6)
	M12	83,5 (61,6)	123 (90,7)	144 (106,2)
	M14	133 (98,1)	196 (144,6)	229 (168,9)
	M16	207 (152,7)	304 (224,2)	355 (261,8)
	M18	296 (218,3)	422 (311,3)	494 (364,4)
	M20	417 (307,6)	594 (438,1)	695 (512,6)
	M22	570 (420,4)	813 (599,6)	951 (701,4)
	M24	718 (529,6)	1022 (753,8)	1196 (882,1)
	M27	1058 (780,3)	1506 (1110,8)	1763 (1300,3)
	M30	1437 (1059,9)	2046 (1509,1)	2395 (1766,5)
	M33	1944 (1433,8)	2770 (2043)	3240 (2389,7)
	M36	2500 (1843,9)	3561 (2626,5)	4167 (3073,4)
	M39	3237 (2387,5)	4610 (3400,2)	5394 (3978,4)

Torque values for metric fine-pitch thread

Screws/bolts and nuts

The specified tightening torques only apply if:

- If a coefficient of friction of μ ges = 0.14 is attained in combination with the thread lubricant. A surface protection, for example A3C+L, Dacromet or Termosil, is recommended for this.
- No other tightening torque is specified in the text.
- No additional screw locks, for example MK screws or a liquid screw lock, are used.

Torque settings in Nm (ft.lb)				
Property class		**8.8**	**10.9**	**12.9**
Designation/dimensions				
Hex head screws ISO 8765, ISO 8876 Hexagon nuts ISO 4032	M8 x 1	26 (19,2)	38,5 (28,4)	45 (33,2)
	M10 x 1	54 (39,8)	79 (58,3)	92,5 (68,2)
	M10 x 1.25	51 (37,6)	74,5 (54,9)	88 (64,9)
	M12 x 1.25	90,5 (66,7)	134 (98,8)	156 (115,1)
	M12 x 1.5	87 (64,2)	128 (94,4)	150 (110,6)
	M14 x 1.5	143 (105,5)	210 (154,9)	246 (181,4)
	M16 x 1.5	219 (161,5)	323 (238,2)	378 (278,8)
	M18 x 1.5	331 (244,1)	470 (346,7)	551 (406,4)
	M18 x 2	313 (230,9)	446 (329)	522 (385)
	M20 x 1.5	459 (338,5)	655 (483,1)	766 (565)
	M22 x 1.5	622 (458,8)	886 (653,5)	1037 (764,9)
	M24 x 1.5	809 (596,7)	1152 (849,7)	1348 (994,2)
	M24 x 2	778 (573,8)	1108 (817,2)	1297 (956,6)
	M27 x 1.5	1173 (865,2)	1672 (1233,2)	1956 (1442,7)
	M27 x 2	1135 (837,1)	1617 (1192,6)	1892 (1395,5)
	M30 x 2	1580 (1165,3)	2251 (1660,3)	2634 (1942,7)
	M33 x 2	2116 (1560,7)	3015 (2223,7)	3528 (2602,1)
	M36 x 2	2773 (2045,3)	3951 (2887,6)	4623 (3409,7)
	M39 x 2	3557 (2623,5)	5067 (3737,2)	5930 (4373,7)

Tightening torques for hydraulic screw connections and air-conditioning screw connections with sealing cone and O-ring DIN 3865

Outside tube diameter in mm (in.)	Tightening torque (Light row) in Nm (ft.lb)	Tightening torque (Heavy row) in Nm (ft.lb)
6 (0,24)	10 (7,4)	15 (11,1)
8 (0,31)	15 (11,1)	25 (18,4)
10 (0,39)	25 (18,4)	35 (25,8)
12 (0,47)	35 (25,8)	50 (36,9)
15 (0,59)	50 (36,9)	–
16 (0,63)	–	80 (59)
18 (0,71)	80 (59)	–
20 (0,79)	–	110 (81,1)
22 (0,87)	110 (81,1)	–
25 (0,98)	–	160 (118)
28 (1,1)	160 (118)	–
30 (1,18)	–	210 (154,9)
35 (1,38)	210 (154,9)	–
38 (1,5)	–	320 (236)
42 (1,65)	320 (236)	–

Tightening torques for hydraulic screw connections with olive DIN 3861

Outside tube diameter in mm (in.)	Tightening torque (Light row) in Nm (ft.lb)	Tightening torque (Heavy row) in Nm (ft.lb)
6 (0,24)	15 (11,1)	25 (18,4)
8 (0,31)	25 (18,4)	35 (25,8)
10 (0,39)	35 (25,8)	50 (36,9)
12 (0,47)	50 (36,9)	80 (59)
15 (0,59)	80 (59)	–
16 (0,63)	–	110 (81,1)
18 (0,71)	110 (81,1)	–
20 (0,79)	–	160 (118)
22 (0,87)	160 (118)	–
25 (0,98)	–	210 (154,9)
28 (1,1)	210 (154,9)	–
30 (1,18)	–	320 (236)
35 (1,38)	320 (236)	–
38 (1,5)	–	400 (295)
42 (1,65)	400 (295)	–

Tightening torques for hydraulic system screw-in spud SDS

Shape B with sealing edge (cutting edge) and shape E with soft O-ring seal

Dimension	Tightening torque (Light row) in Nm (ft.lb)	Tightening torque (Heavy row) in Nm (ft.lb)
M5	–	–
M6	–	–
M8 x 1	–	–
M10 x 1	18 (13,3)	–
M12 x 1.5	30 (22,1)	35 (25,8)
M14 x 1.5	45 (33,2)	55 (40,6)
M16 x 1.5	60 (44,3)	70 (51,6)
M18 x 1.5	70 (51,6)	110 (81,1)
M20 x 1.5	–	140 (103,3)
M22 x 1.5	140 (103,3)	170 (125,4)
M26 x 1.5	180 (132,8)	220 (162,3)
M27 x 2	190 (140,1)	250 (184,4)
M33 x 2	300 (221,3)	300 (221,3)
M42 x 2	500 (368,8)	550 (405,7)
M48 x 2	550 (405,7)	600 (442,5)
G 1/8 A	20 (14,8)	25 (18,4)
G 1/4 A	35 (25,8)	40 (29,5)
G 3/8 A	70 (51,6)	90 (66,4)
G 1/2 A	100 (73,8)	150 (110,6)
G 3/4 A	180 (132,8)	270 (199,1)
G 1 A	250 (184,4)	350 (258,1)
G 1-1/4 A	450 (331,9)	500 (368,8)
G 1-1/2 A	550 (405,7)	600 (442,5)
7/16-20	–	–
1/2-20 (UNF)	–	–
9/16-18	–	–
3/4-16	–	–
7/8-14	–	–
1-1/16-12	–	–
1-5/16-12	–	–
1-5/8-12 (UNF)	–	–
1-7/8-12 (UNF)	–	–
2-12 (UNF)	–	–

Shape F with O-ring and plug

Dimension	Tightening torque (Light row) in Nm (ft.lb)	Tightening torque (Heavy row) in Nm (ft.lb)
M5	2,8 (2,1)	–
M6	5,2 (3,8)	–
M8 x 1	7 (5,2)	–
M10 x 1	11 (8,1)	–
M12 x 1.5	15 (11,1)	15 (11,1)
M14 x 1.5	25 (18,4)	25 (18,4)
M16 x 1.5	35 (25,8)	35 (25,8)
M18 x 1.5	50 (36,9)	50 (36,9)
M20 x 1.5	–	55 (40,6)
M22 x 1.5	80 (59)	80 (59)
M26 x 1.5	110 (81,1)	110 (81,1)
M27 x 2	110 (81,1)	160 (118)
M33 x 2	160 (118)	210 (154,9)
M42 x 2	210 (154,9)	320 (236)
M48 x 2	320 (236)	420 (309,8)
G 1/8 A	–	–
G 1/4 A	–	–
G 3/8 A	–	–
G 1/2 A	–	–
G 3/4 A	–	–
G 1 A	–	–
G 1-1/4 A	–	–
G 1-1/2 A	–	–
7/16 - 20	15 (11,1)	20 (14,8)
1/2-20 (UNF)	20 (14,8)	25 (18,4)
9/16-18	30 (22,1)	30 (22,1)
3/4-16	35 (25,8)	60 (44,3)
7/8-14	70 (51,6)	90 (66,4)
1-1/16-12	85 (62,7)	100 (73,8)
1-5/16-12	150 (110,6)	170 (125,4)
1-5/8-12 (UNF)	250 (184,4)	300 (221,7)
1-7/8-12 (UNF)	300 (221,7)	350 (258,1)
2-12 (UNF)	350 (258,1)	400 (295)

Shape H with O-ring and chamber ring

Dimension	Tightening torque (Light row) in Nm (ft.lb)	Tightening torque (Heavy row) in Nm (ft.lb)
G 1/8 A	20 (14,8)	20 (14,8)
G 1/4 A	40 (29,5)	40 (29,5)
G 3/8 A	75 (55,3)	75 (55,3)
G 1/2 A	85 (62,7)	85 (62,7)
G 3/4 A	180 (132,8)	180 (132,8)
G 1 A	310 (228,6)	310 (228,6)
G 1-1/4 A	450 (331,9)	450 (331,9)
G 1-1/2 A	540 (398,3)	540 (398,3)

Tightening torques for hydraulics rotating threaded fittings

Dimension	Tightening torque (Light row) in Nm (ft.lb)	Tightening torque (Heavy row) in Nm (ft.lb)
M10 x 1	20 (14,8)	30 (22,1)
M12 x 1.5	35 (25,8)	40 (29,5)
M14 x 1.5	45 (33,2)	50 (36,9)
M16 x 1.5	60 (44,3)	70 (51,6)
M18 x 1.5	75 (55,3)	80 (59)
M20 x 1.5	–	100 (73,8)
M22 x 1.5	125 (92,2)	130 (95,9)
M26 x 1.5	130 (95,9)	–
M27 x 2	130 (95,9)	140 (103,3)
M33 x 2	300 (221,3)	300 (221,3)
M42 x 2	500 (368,8)	500 (368,8)
M48 x 2	600 (442,5)	600 (442,5)
G 1/8 A	20 (14,8)	–
G 1/4 A	40 (29,5)	40 (29,5)
G 3/8 A	65 (47,9)	70 (51,6)
G 1/2 A	90 (66,4)	100 (73,8)
G 3/4 A	130 (95,9)	130 (95,9)
G 1 A	270 (199,1)	380 (280,3)
G 1-1/4 A	500 (368,8)	600 (442,5)
G 1-1/2 A	600 (442,5)	700 (516,3)

Tightening torques for banjo bolts DIN 7643

Dimension	Torque setting in Nm (ft.lb)
M8 x 1	8 (5,9)
M10 x 1	15 (11,1)
M12 x 1.5	27 (19,9)
M14 x 1.5	38 (28,)
M16 x 1.5	70 (51,6)
M18 x 1.5	45 (33,2)
M20 x 1.5	58 (42,8)
M22 x 1.5	95 (70,1)
M26 x 1.5	130 (95,9)
M30 x 1.5	183 (135)

Tightening torques for hydraulics screw struts SDE

Shape F with O-ring

Dimension	Tightening torque (Very light row) in Nm (ft.lb)	Tightening torque (Light row) in Nm (ft.lb)	Tightening torque (Heavy row) in Nm (ft.lb)
M8 x 1	–	–	–
M10 x 1	20 (14,8)	15 (11,1)	–
M12 x 1.5	–	25 (18,4)	35 (25,8)
M14 x 1.5	–	35 (25,8)	45 (33,2)
M16 x 1.5	–	40 (29,5)	55 (40,6)
M18 x 1.5	–	45 (33,2)	90 (66,4)
M20 x 1.5	–	–	140 (103,3)
M22 x 1.5	–	60 (44,3)	170 (125,4)
M26 x 1.5	–	100 (73,8)	190 (140,1)
M27 x 2	–	100 (73,8)	190 (140,1)
M33 x 2	–	160 (118)	310 (228,6)
M42 x 2	–	210 (154,9)	330 (243,4)
M48 x 2	–	260 (191,8)	420 (309,8)
7/16-20	–	15 (11,1)	20 (14,8)
1/2-20 (UNF)	–	30 (22,1)	40 (29,5)
9/16-18	–	35 (25,8)	45 (33,2)
3/4-16	–	55 (40,6)	60 (44,3)
7/8-14	–	80 (59)	90 (66,4)
1-1/16-12	–	100 (73,8)	100 (73,8)
1-5/16-12	–	150 (110,6)	170 (125,4)
1-5/8-12 (UNF)	–	290 (213,9)	340 (250,8)
1-7/8-12 (UNF)	–	325 (239,7)	415 (306,1)
2-12 (UNF)	–	350 (258,1)	450 (331,9)

Shape H with O-ring and chamber ring

Dimension	Tightening torque (Very light row) in Nm (ft.lb)	Tightening torque (Light row) in Nm (ft.lb)	Tightening torque (Heavy row) in Nm (ft.lb)
M8 x 1	10 (7,4)	–	–
M10 x 1	20 (14,8)	18 (13,3)	–
M12 x 1.5	–	30 (22,1)	35 (25,8)
M14 x 1.5	–	45 (33,2)	55 (40,6)
M16 x 1.5	–	60 (44,3)	80 (59)
M18 x 1.5	–	70 (51,6)	105 (77,4)
M20 x 1.5	–	–	140 (103,3)
M22 x 1.5	–	125 (92,2)	125 (92,2)
M26 x 1.5	–	180 (132,8)	180 (132,8)
M27 x 2	–	180 (132,8)	180 (132,8)
M33 x 2	–	300 (221,3)	380 (280,3)
M42 x 2	–	450 (331,9)	500 (368,8)
M48 x 2	–	600 (442,5)	600 (442,5)
G 1/8 A	20 (14,8)	20 (14,8)	25 (18,4)
G 1/4 A	–	35 (25,8)	45 (33,2)
G 3/8 A	–	70 (51,6)	75 (55,3)
G 1/2 A	–	100 (73,8)	100 (73,8)
G 3/4 A	–	180 (132,8)	180 (132,8)
G 1 A	–	300 (221,3)	300 (221,3)
G 1-1/4 A	–	450 (331,9)	450 (331,9)
G 1-1/2 A	–	540 (398,3)	540 (398,3)

Tightening torques for brake line threaded fittings

Shape F male fitting screws and shape FS male fitting screws with flare

Dimension	Torque setting in Nm (ft.lb)
M10 x 1	14+2 (10,3+1,5)

Tightening torques for worm drive hose clamps

Width of the clamp in mm (in)	Torque settings for first-time installation of new hoses in Nm (ft. lb)	Torque settings for re-tightening or reassembly in Nm (ft. lb)
7,9 (0,31)	0,9±0,2 (0,7±0,1)	0,7±0,2 (0,5±0,1)
13,5 (0,53)	4,5±0,5 (3,3±0,4)	3,0±0,5 (2,2±0,4)
15,9 (0,63)	7,5±0,5 (5,5±0,4)	4,5±0,5 (3,3±0,4)

Tightening torques for spring-loaded worm drive hose clamps

Width of the clamp in mm (in)	Diameter of the clamp in mm (in)	Torque setting in Nm (ft.lb)
12 (0,47)	60-80 (2,36-3,15)	5+0,5 (3,7+0,4)
12 (0,47)	70-90 (2,76-3,54)	5+0,5 (3,7+0,4)

E.3 Safety instructions

Pay particular attention to the following

The information in this System Manual must be read and observed in order to avoid risks to all persons who use, maintain, repair, service or inspect this machine.

In particular, read this section on safety.

Safety symbols and signal words

Explanation

The following symbol identifies safety instructions. It is used for warning against potential personal risk or danger.

DANGER

DANGER identifies a situation causing death or serious injury if it is not avoided.

Consequences in case of non-observance.

► Avoidance of injury or death.

WARNING

WARNING identifies a situation that can cause death or serious injury if it is not avoided.

Consequences in case of non-observance.

► Avoidance of injury or death.

CAUTION

CAUTION identifies a situation that can cause injury if it is not avoided.

Consequences in case of non-observance.

► Avoidance of injury.

NOTICE

NOTICE identifies a situation that causes damage to the machine if it is not observed.

► Avoidance of damage to property.

The warning and safety signs attached to the machine provide important information for safe operation. Compliance is for your safety.

Safety and accident prevention regulations

- In addition to this service manual also always observe the Operator's Manual of the machine.
- Observe all safety and accident prevention regulations.
- When driving on public roads, observe the respective regulations!
- Before starting the diesel engine, please ensure that no gear is engaged and that all safety devices are attached and set at the safety position.
- Before starting the diesel engine and before switching on the main drive, hoot the horn.
- Start the diesel engine only from the driver's seat. The diesel engine must not be started by short-circuiting the electric connections on the starter because doing so may cause the machine to start moving immediately!
- Do not let the diesel engine run in enclosed areas.
- The assemblers clothes should be close-fitting. Avoid loose-fitting clothes!
- Caution is essential when handling fuel – increased fire hazard.
- Do not smoke during refueling, and avoid fire and sparks.
- Do not smoke when refueling!
- Before refueling, always stop the diesel engine and remove the starting key. Do not refuel in closed rooms.
- Wipe away fuel spills immediately!
- Keep the machine clean to avoid fire hazard.
- Caution is required when handling brake fluids and battery acid. Battery acid is toxic and caustic!
- Only perform work under the lifted machine if safe and secure means of support are used.
- After maintenance work or servicing, reattach the safety devices!

Leaving the machine

- Secure the machine against rolling before leaving it (parking brake, wheel chocks). Stop the engine, remove the starting key and, if necessary, lock the cabin!
- If the vehicle is not going to be moved for a longer period, switch off the battery circuit breaker.
- Never leave the machine untended as long as the engine is still running!
- Before leaving the vehicle, lower the loading unit completely!

Adjustment and maintenance

Due to their function the machine drives are not automatically secured after stopping the engine.

In addition, adjustment work can require that the drives are rotated.

Observe the following:

- Prior to adjustment, cleaning, and maintenance work as well as rectifying functional disorders:
  - Stop the engine.
  - Disconnect the battery circuit breaker.
- Before any adjustment, cleaning or maintenance work or before rectifying any functional faults in the hydraulic system, lower the attachment and/or infeed unit.

- When working on the electric system, always disconnect the battery circuit breaker.
- You must ensure that no-one can start the vehicle or cause the drives to start rotating.
- Fluids emitted under high pressure (fuel hydraulic oil, etc.) can penetrate the skin and cause serious injuries, therefore call a doctor immediately as otherwise serious infections can be caused!
- Repairs to the hydraulic system may only be carried out by specialist workshops.
- Be careful when opening the radiator cap. The radiator is under pressure when the engine is hot!
- Sufficient knowledge and assembly tools in accordance with regulations are required for mounting tires!
- Dispose of oil, fuels and filters properly!
- Retighten the wheel nuts regularly!

Risk of injury from hydraulic fluids

WARNING

Risk of injury due to liquids under high pressure.

Liquids can penetrate the skin and cause death or serious injury.

► Work on the hydraulic system may only be performed by authorized service centers.

► Check the flexible lines regularly.

► Ensure that the oil jet is not directed toward your body.

► Replace damaged flexible lines.

► Replace hose lines max 6 years after manufacture's date.

► If hydraulic fluids penetrate skin or eyes, this must be treated by a specialist doctor immediately.

Air conditioning

Environment

The air-conditioning system is filled with an HFC refrigerant which can damage the atmosphere. Be particularly careful when working on the air conditioning system. Maintenance and repair work may only be performed by specialized cryo-service centers. Refrigerant must always be extracted and recycled properly

Pressure accumulator

WARNING

Risk of injury due to liquids under high pressure.

Fluids penetrate the skin and can cause serious injuries.

► Work on the hydraulic system may only be carried out by specialist workshops.

First-aid measures

Breathing:

- Supply persons with fresh air and seek medical attention depending on symptoms.
- Remove person from the danger zone.

Eye contact:

Rinse thoroughly several minutes with plenty of water. Seek medical attention if necessary.

Skin contact:

Wash thoroughly with plenty of water and soap, immediately remove soaked clothes, seek medical attention in case of skin irritations (reddening, etc.).

Swallowing:

Do not induce vomiting, immediately seek medical attention.

Jack up the machine

WARNING

Crushing hazard due to incorrectly jacked-up machine.

Serious injury or death of persons underneath the machine can be caused if the machine lowers or falls down.

► Use jack/trestle of sufficient lifting capacity.

► Use hydraulic jacks/trestles that function reliably.

► Use the jack/trestle on firm and level ground.

► Install a jack/trestle at a suitable position on the machine.

Parking the machine

Perform the following steps before working on the machine:

- Stop the diesel engine.
- Apply the parking brake.
- Remove the starting key.
- Remove key from main battery switch.
- Wait until all parts of the machine have come to a complete standstill.
- Secure the machine with wheel chocks.
- Ensure that the machine cannot be put into operation by other persons.

2 Engine

2.1 Specifications, overview of nameplates

Engine	Kohler
Type	KDI 2504TCR NA V-Belt KDI 2504TCR NA V-Belt LRC[1]
Power (according to ISO14396)	55.4 kW (74,3 hp) at 2300 U/min (rpm)
Max. torque	300 Nm (221.3 ft.lb) at 1500 U/min (rpm)
Min. specific fuel consumption	210 g/kWh (7.4 oz/kWh)
Number of cylinders	4
Displacement	2482 cm^3 (151,46 in^3)
Bore and stroke	88 mm x 102 mm (3,46 in x 4.01 in)
Max. engine speed without load	approx. 2600 U/min (rpm)
Idling speed	approx. 950 U/min (rpm)
fuel injection system	Common Rail direct fuel injection
Firing order	1-3-4-2
Starting aid	Glow plug
Max. inclined position (engine no longer supplied with oil)	25°/max. 30 min in all directions (Note tilt limit of vehicle!)
Oil pressure	Forced feed lubrication
Valve clearance	Hydraulic tappets
Exhaust-emission level	Level IIIB / Tier 4 interim
Exhaust emissions according to standard	97/68 EC and 2011/88 EC

1. Only for countries without emission standard IIIB / Tier 4 f

Type labels

Engine type label

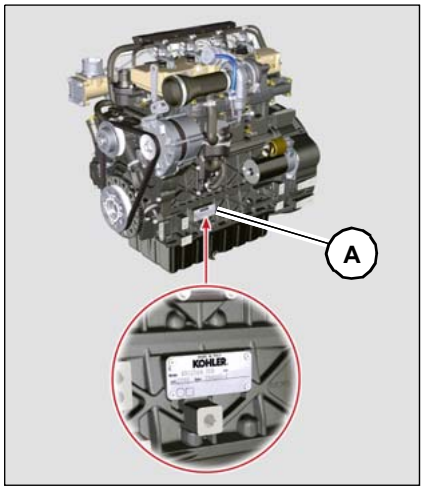

The type plate **A** is affixed to the suction side at the bottom of the crankcase.

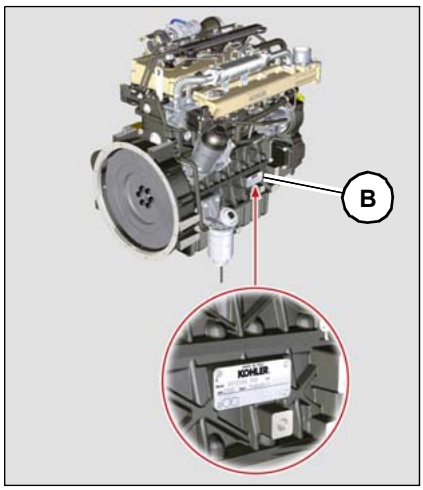

The type plate B is affixed to the exhaust side at the bottom of the crankcase.

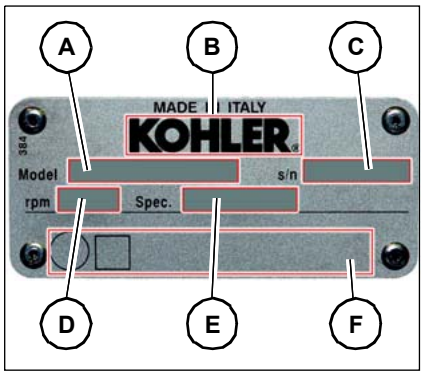

Pos.	Designation
A	Engine model
B	Name of manufacturer
C	Serial number of engine
D	Maximum rotational speed per minute
E	Motor design
F	Registration data and ‘‘CE‘‘ guidelines

Information

When ordering spare parts, the spec. no. must always be entered in field **F**!

Type plate, EPA standards

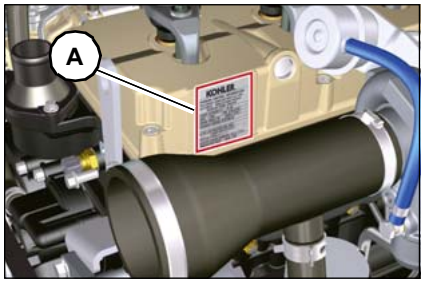

The type plate **A** is affixed to the valve cover on the turbo loader.

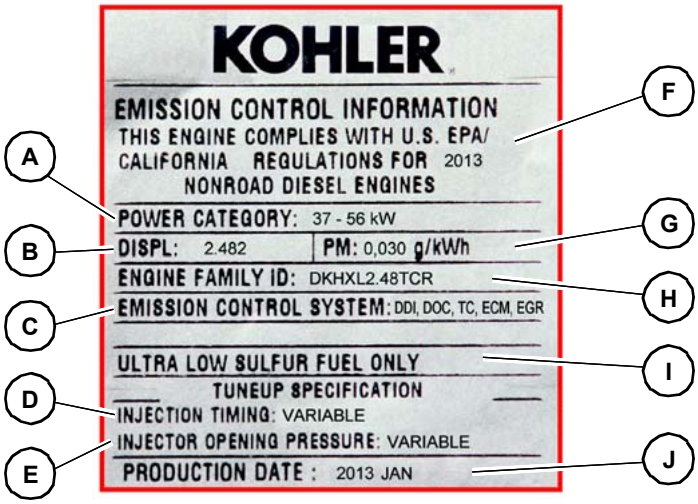

Pos.	Designation
A	Output category (kW)
B	Engine displacement (litre)
C	Emission Control System = ECS
D	Entry of injection time
E	Pressure opening injection valve (bar)
F	Reference year for compliance with standards
G	Entry of particulate emission (g/kWh)
H	ID number of motor family
I	Fuel with low sulphur content
J	Date of manufacture (example: January 2013)

2.2 Cylinder numbering

Cylinder arrangement:

The cylinders are counted, starting with flywheel **B**.

The viewing direction refers to the flywheel **B**.

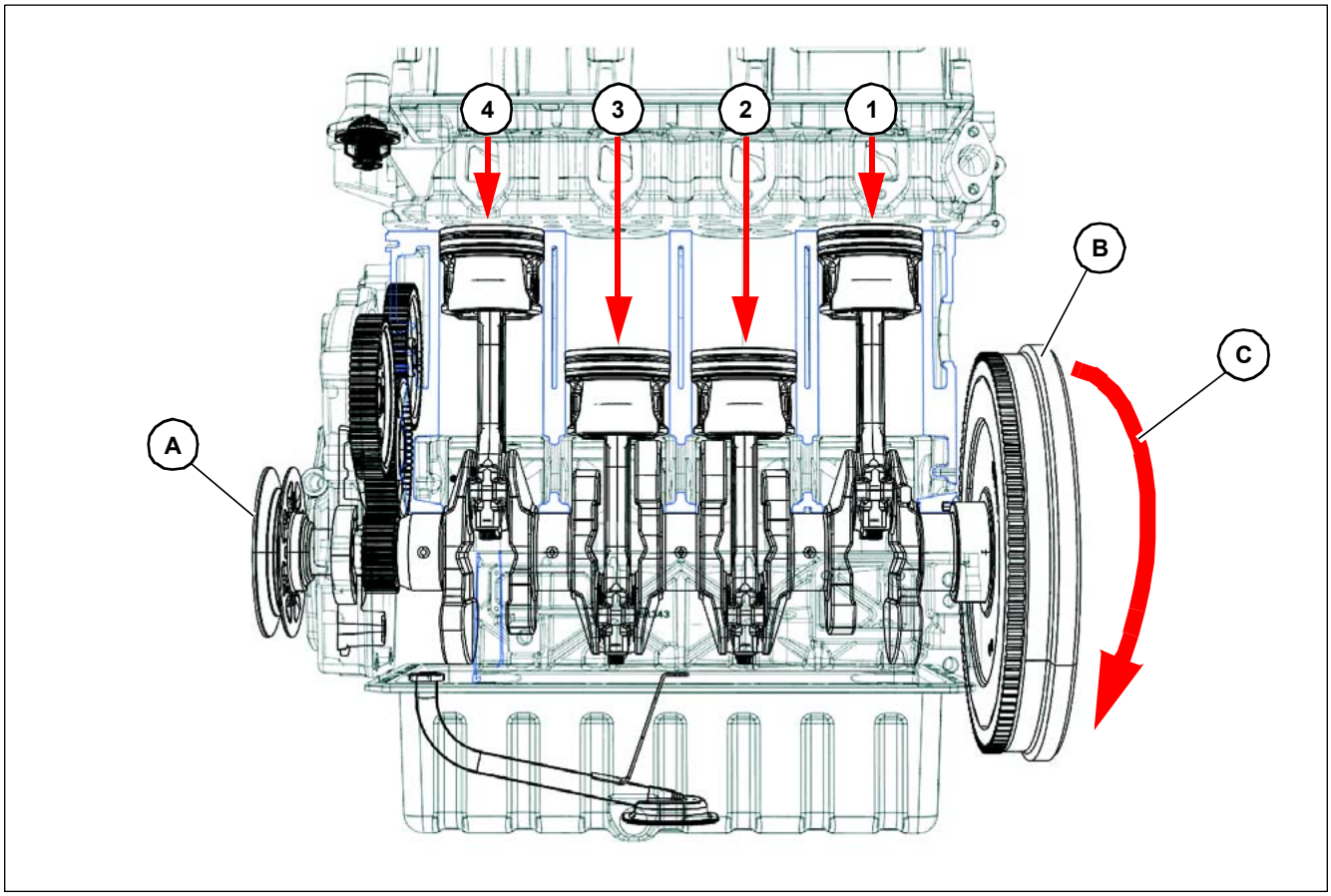

Pos.	Component
A	Belt pulley for crankshaft
B	Flywheel
C	Direction of rotation (seen as anti-clockwise to the flywheel **B**)
1-4	Cylinder

2.3 Diesel engine overview

View from the right

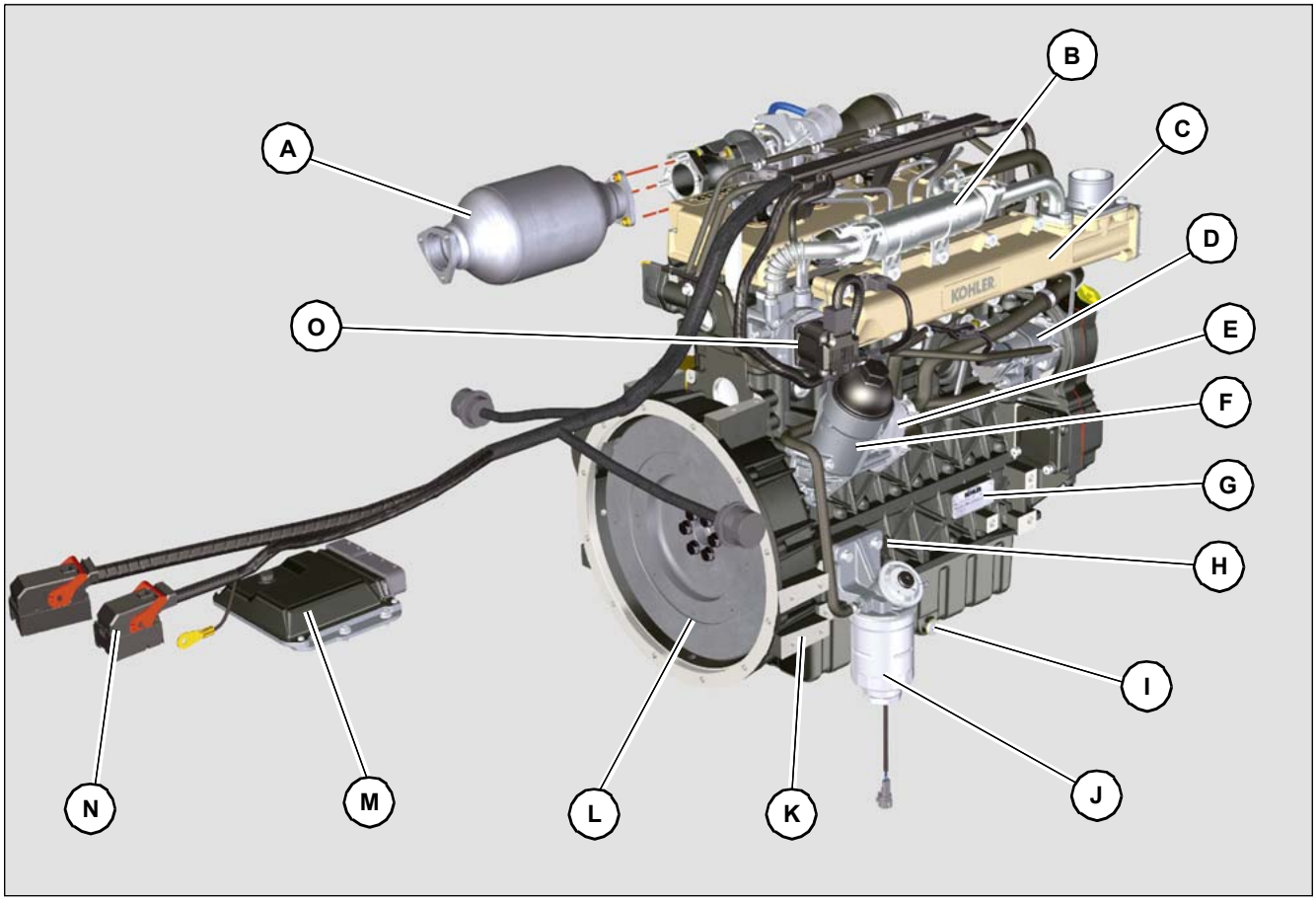

Pos.	Component
A	SCR catalytic converter
B	EGR cooler
C	Suction collector pipe
D	High-pressure pump for fuel injection
E	Engine oil cooler
F	Engine oil filter
G	Engine type label
H	Oil dipstick
I	Oil drain plug
J	Fuel filter
K	Flange bell
L	Flywheel
M	Engine control unit
N	Engine wiring harness
O	EGR valve

Seen from the left

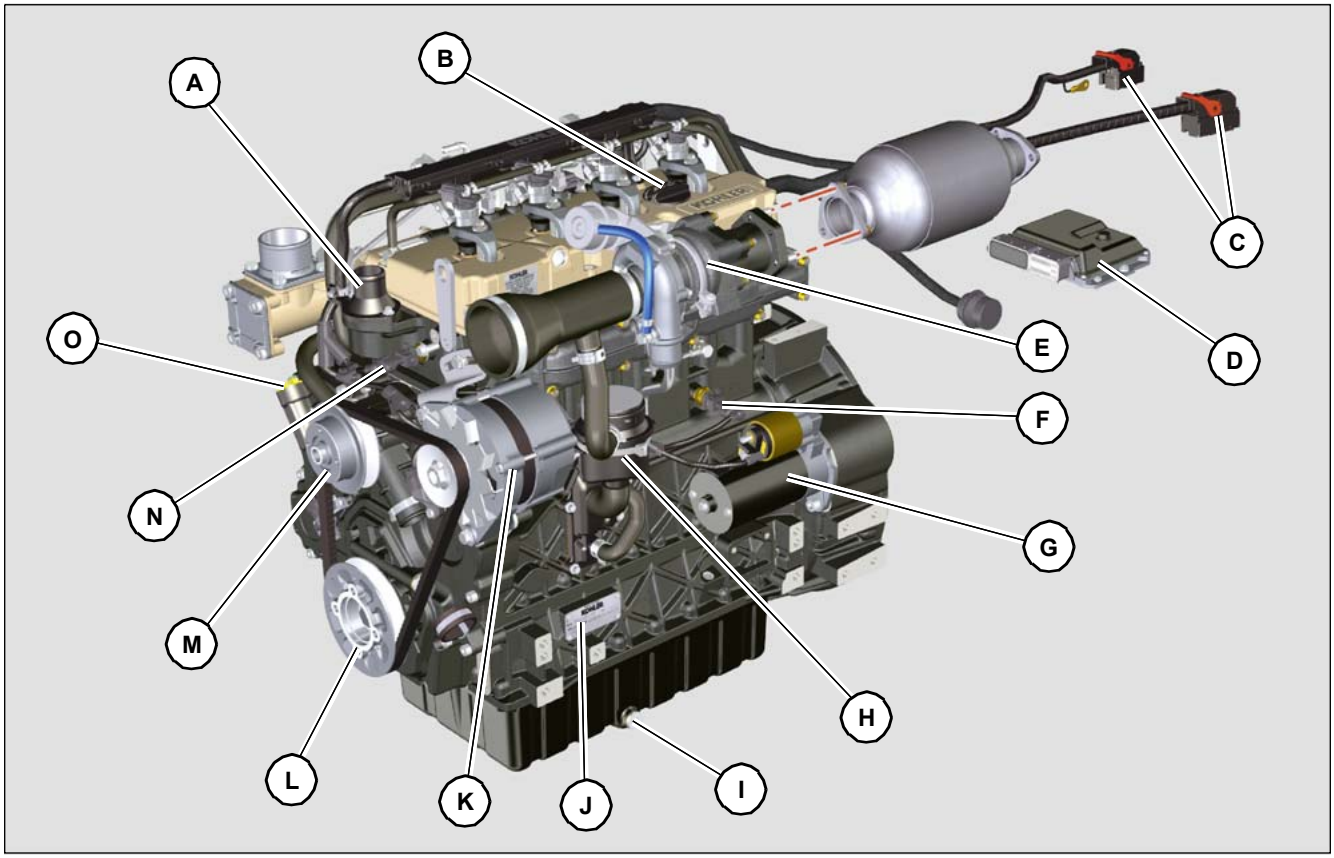

Pos.	Component
A	Thermostat valve
B	Oil filler neck
C	Engine wiring harness
D	Engine control unit
E	Exhaust turbocharger
F	Engine oil pressure switch
G	Starter
H	Oil vapour separator
I	Oil drain plug
J	Engine type label
K	Generator (alternator)
L	Pulley
M	Coolant pump
N	Diesel engine temperature sensor
O	Side oil filler neck

Seen from above

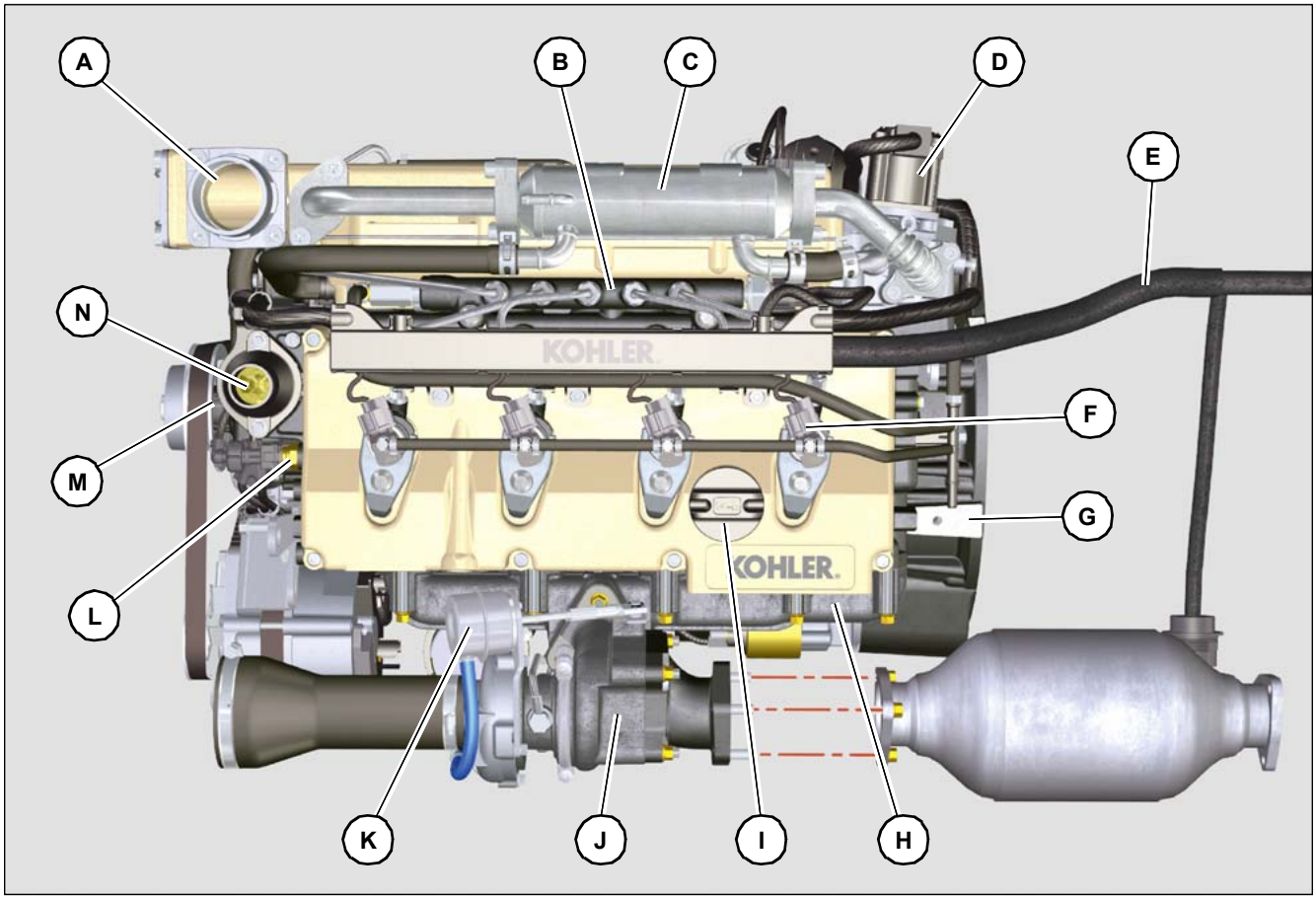

Pos.	Component
A	Suction collector pipe
B	Common Rail
C	EGR cooler
D	EGR valve
E	Engine wiring harness
F	Injectors
G	Flange bell
H	Exhaust manifold
I	Oil filler neck
J	Exhaust turbocharger
K	Setting device for Wastegate valve
L	Diesel engine temperature sensor
M	Coolant pump
N	Thermostat valve

2.4 Lube oil system

Overview of lubricant oil system

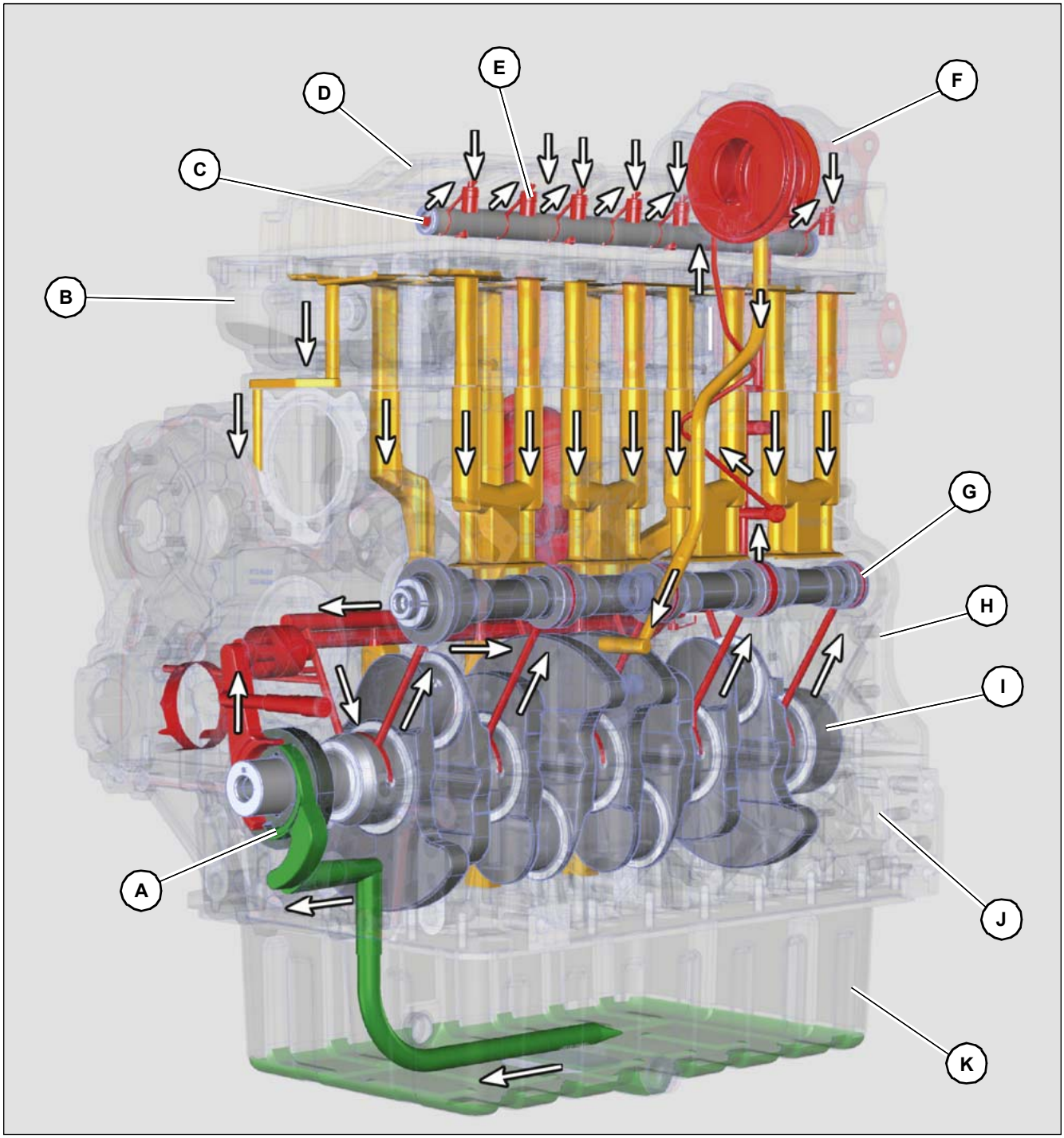

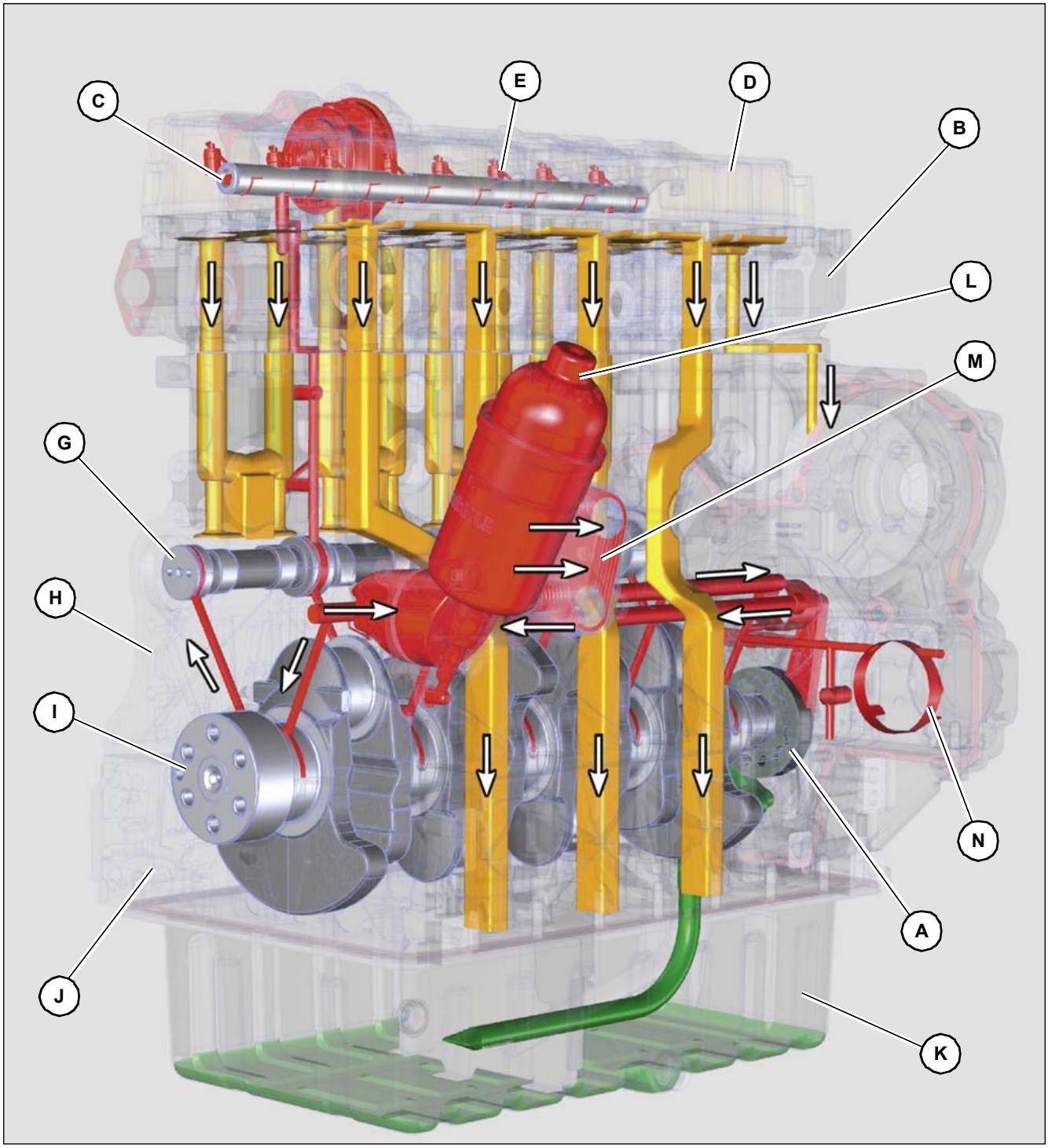

Colour	Description
	Engine oil is suctioned up
	Engine oil under pressure
	Engine oil in reflux to engine oil sump

Pos.	Component
A	Lube oil pump
B	Cylinder head
C	Rocker
D	Cylinder-head cover
E	Hydraulic tappets
F	Exhaust turbocharger
G	Camshaft
H	Upper crankcase
I	Crankshaft
J	Lower crankcase
K	Engine oil sump
L	Engine oil filter
M	Engine oil cooler
N	Gear support (auxiliary operation)

Functional description - lubricant oil system

The drive for the lubricating oil pump **A** is executed via the crankshaft **I** on the switch side.

The engine oil is drawn up through the green channels. In the red channels, the engine oil is at a working pressure of 4 bar (58.01 psi). The returning engine oil is conveyed through the yellow channels to the engine oil sump **K**.

The lubricant oil pressure is monitored by engine control unit **N005**.

2.5 Fuel system

Overview of fuel supply

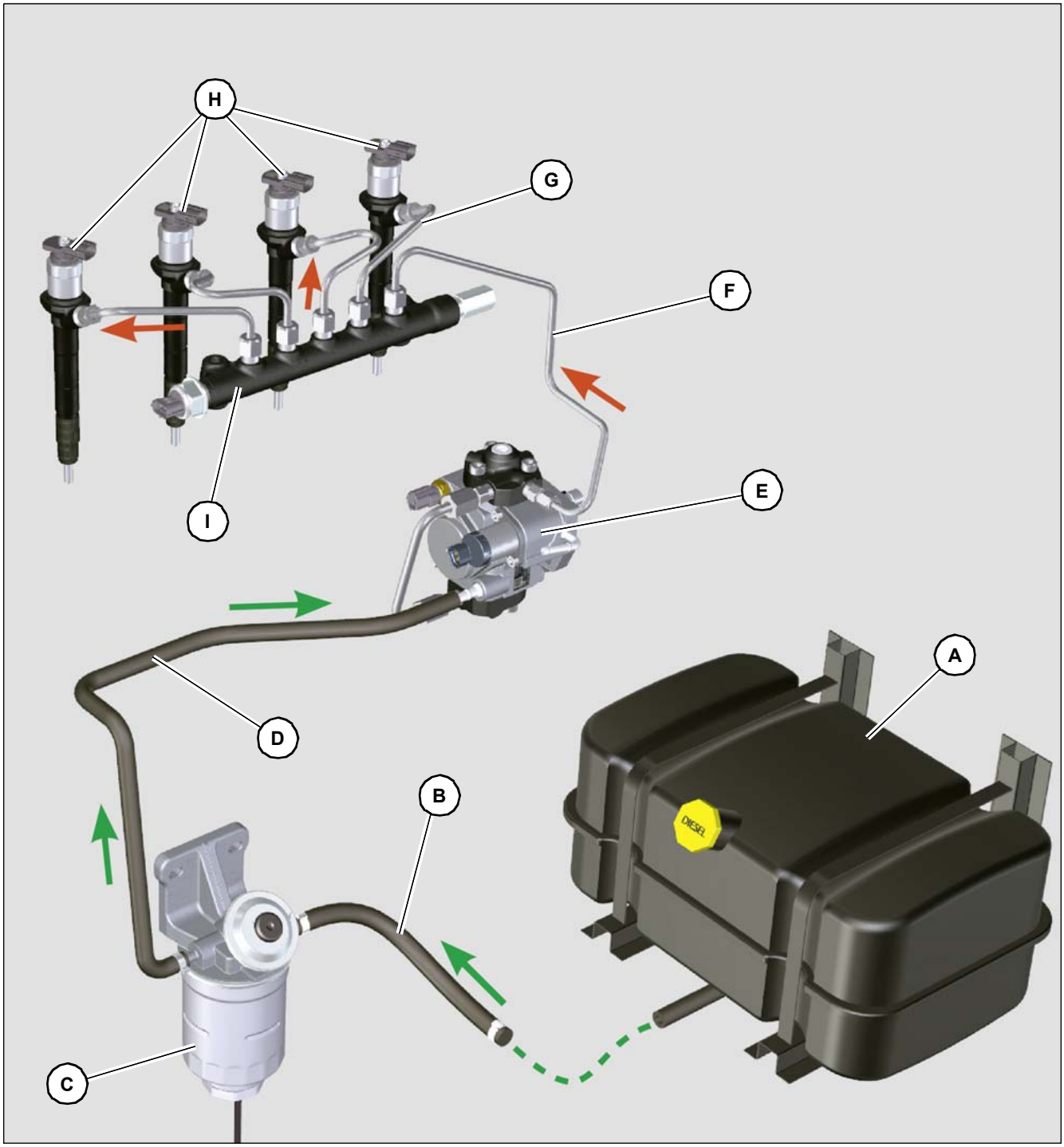

Colour	Description
	Low pressure (0.2 bar) (2.90 psi)
	High pressure (2000 bar) (29007.55 psi)

Pos.	Component
A	Fuel tank
B	Low pressure line between fuel tank **A** and fuel filter **C**
C	Fuel filter
D	Low pressure line between fuel filter C and high pressure pump E
E	High-pressure pump
F	High pressure line between high pressure pump **E** and common rail **I**
G	High pressure line between common rail I and injectors H
H	Injectors
I	Common Rail

Function description of fuel supply

The fuel is conveyed from tank **A** in the low pressure range from max. 0.2 bar (2.90 psi) via fuel filter**C** to the high pressure pump **E**.

From the high pressure pump **E** the fuel is conveyed at a pressure of 2000 bar (29007.55 psi) via the common rail **I** and the injectors **H** into the combustion chamber bowl of the diesel engine.

Overview of fuel reflux

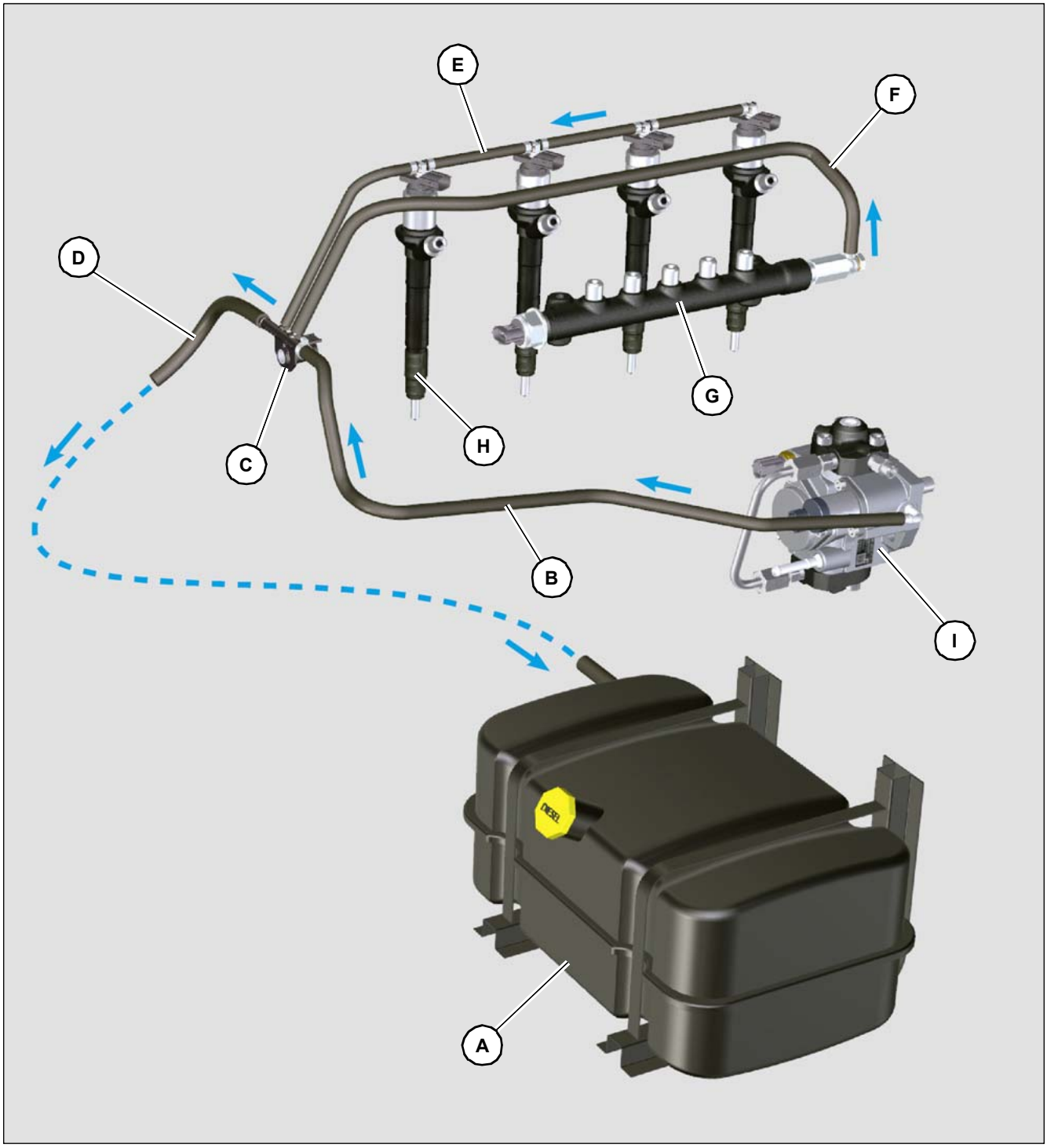

Colour	Description
	Reverse travel (0.2 bar) (2.90 psi)

Pos.	Component
A	Fuel tank
B	Reflux line between high pressure pump **I** and the fuel reflux manifold **C**
C	Fuel reflux manifold
D	Reflux line between fuel reflux manifold C and the fuel tank A
E	Reflux line between injectors H and the fuel reflux manifold **C**
F	Reflux line between common rail **G** and fuel reflux manifold **C**
G	Common Rail
H	Injectors
I	High-pressure pump

Overview of high-pressure pump

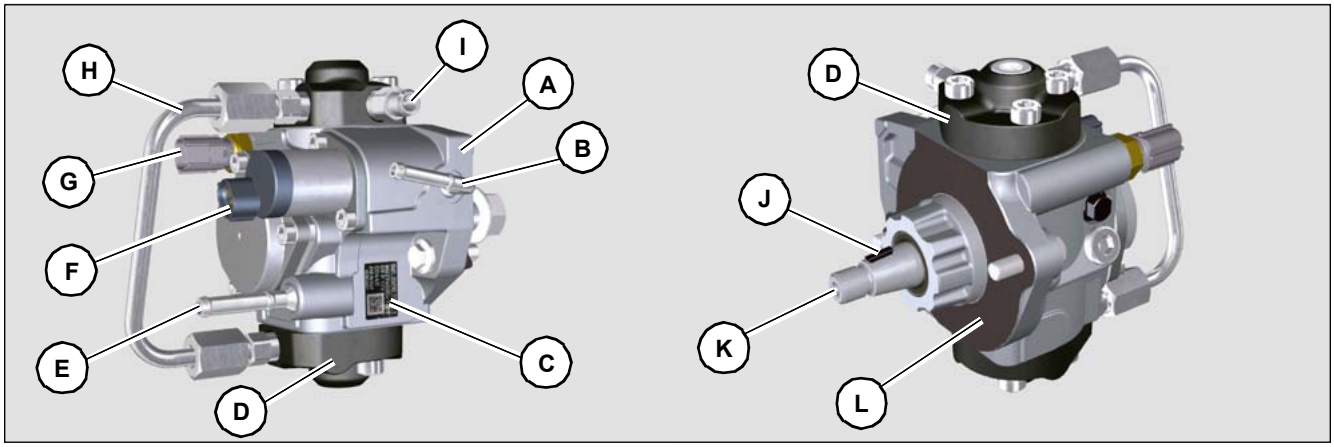

Pos.	Component
A	High-pressure pump
B	Fuel reflux connection
C	Type plate with QR code
D	Position of injection pump elements
E	Fuel supply connection
F	Control valve for fuel suction
G	Fuel temperature sensor
H	Connecting line, position of injection pump elements **D**
I	High pressure connection (outlet) to common rail
J	Wedge to position the shaft at the pump gearbox
K	Shaft
L	Gasket

Injector overview

Pos.	Component
A	Connecting piece for control box of solenoid valve
B	Groove nut to close solenoid valve and valve
C	High pressure line inlet
D	Injector body
E	Annular nut to close injector nozzle
F	Injection nozzle
G	QR code (visual reading)
H	Reflux line connection
I	QR code (electric reading)
J	Injector ID code

Cross-sectional view of injector

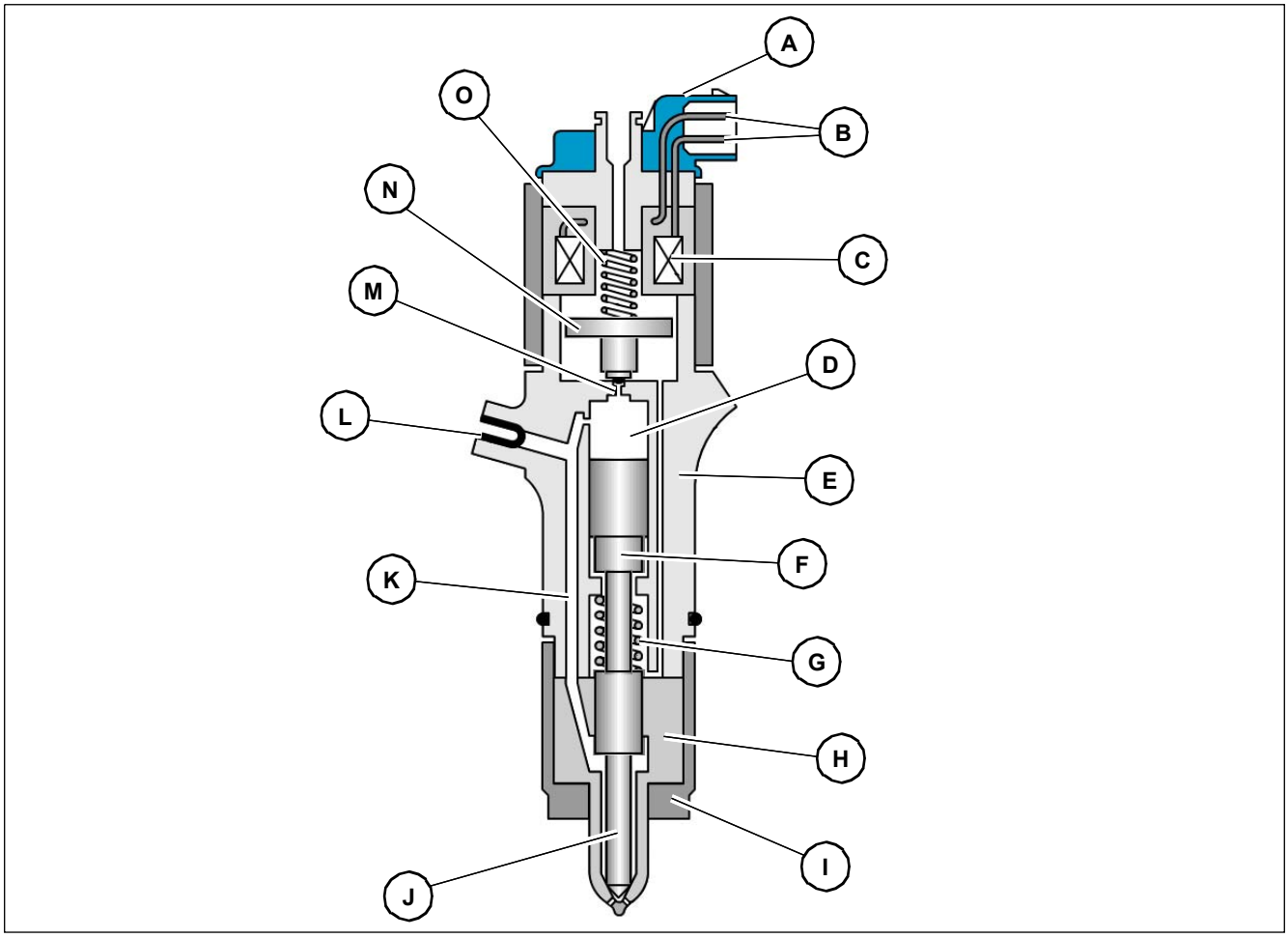

Pos.	Component
A	QR code (visual reading)
B	Magnetic coil connections
C	Solenoid coil
D	Equalisation chamber
E	Injector body
F	Control spool
G	Nozzle needle spring
H	Nozzle needle body
I	Annular nut to close injector nozzle
J	Nozzle needle
K	Fuel duct
L	Filter
M	Reflux bore
N	Solenoid armature
O	Spring

Functional description - injector

Via the filter **L** at the fuel inlet, the fuel is conveyed directly from the rail to the compensating chamber **D** and the fuel channel **K**. The full rail pressure of 2000 bar (29007.55 psi) is applied.

Through the compensating chamber **D** that the nozzle needle **J** is balanced hydraulically. The additional force of the nozzle needle spring **G** prevents the nozzle needle **J** from opening.

When the magnetic oil is energised **C** the force of the spring **O** is overcome and the magnet anchor **N** is opened.

This releases pressure in the compensating chamber **D** via the reflux bore **M**. This means that the needle **J** is no longer in hydraulic balance and is raised by the increasing pressure in the fuel channel **K**.

Overview of common rail

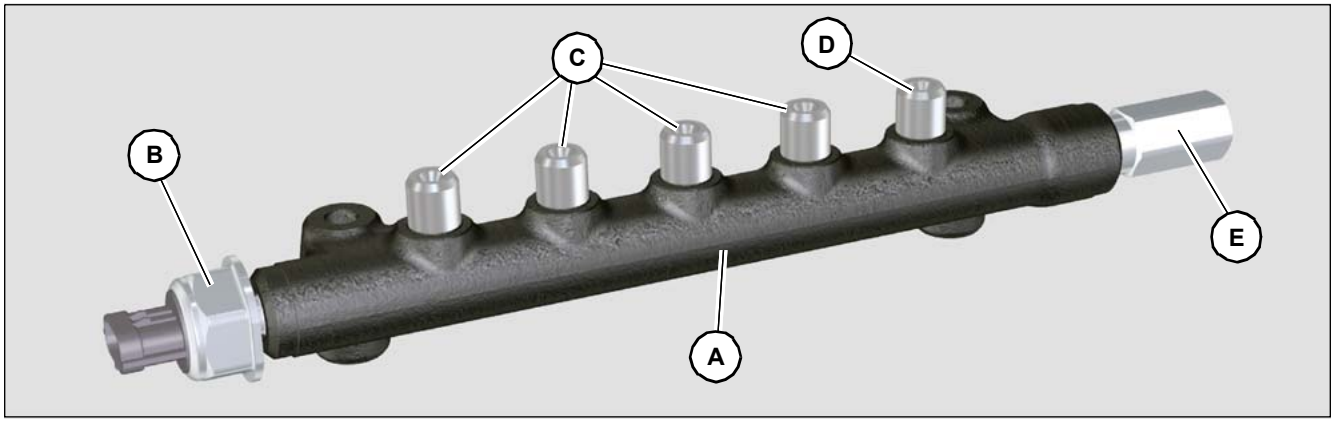

Pos.	Component
A	Common Rail
B	Fuel pressure sensor
C	Outlets to injectors
D	Input from high pressure pump
E	Pressure relief valve

Function description of common rail

The fuel is conveyed from the high pressure pump via connection **D** at a pressure of 2000 bar (29007.55 psi) into the common rail **A**. In the process, the pressure in the common rail **A** is regulated from the high pressure pump via the control valve for fuel suction and monitored by fuel pressure sensor **B**.

The pressure relief valve **E** opens only if the pressure in the common rail **A** exceeds 2400 bar (34809.06 psi). The fuel emitted by the pressure-limiting valve **E** is conveyed to the fuel tank via the fuel reflux.

2.6 Cooling system

Thermostat overview

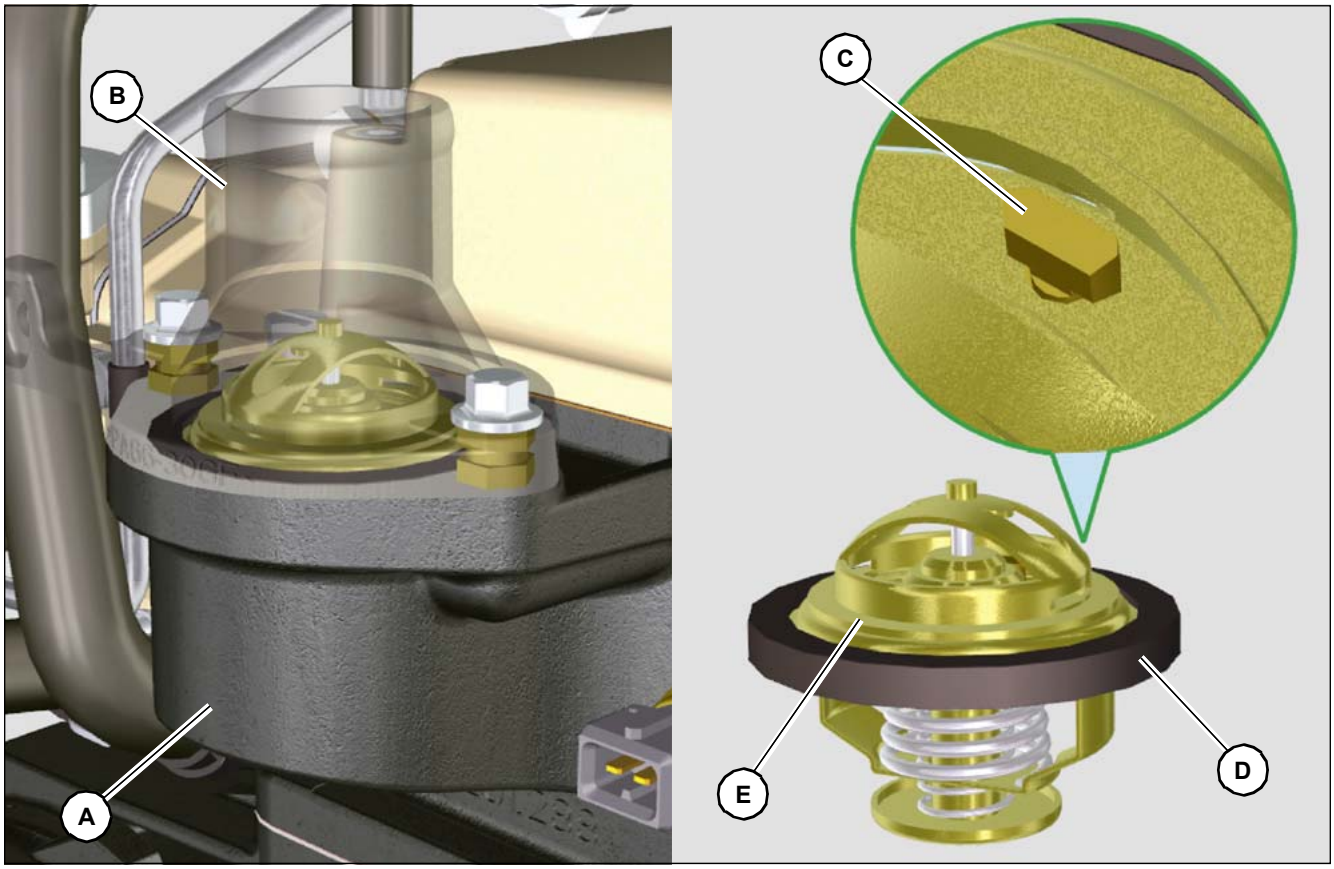

Pos.	Component
A	Cylinder head
B	Lid on coolant outlet
C	Vent hole
D	Sealing ring
E	Thermostat valve (opening temperature +79°C ± 2°C (174.20°F ± 35.6°F)

Overview of EGR circuit (EGR cooler)

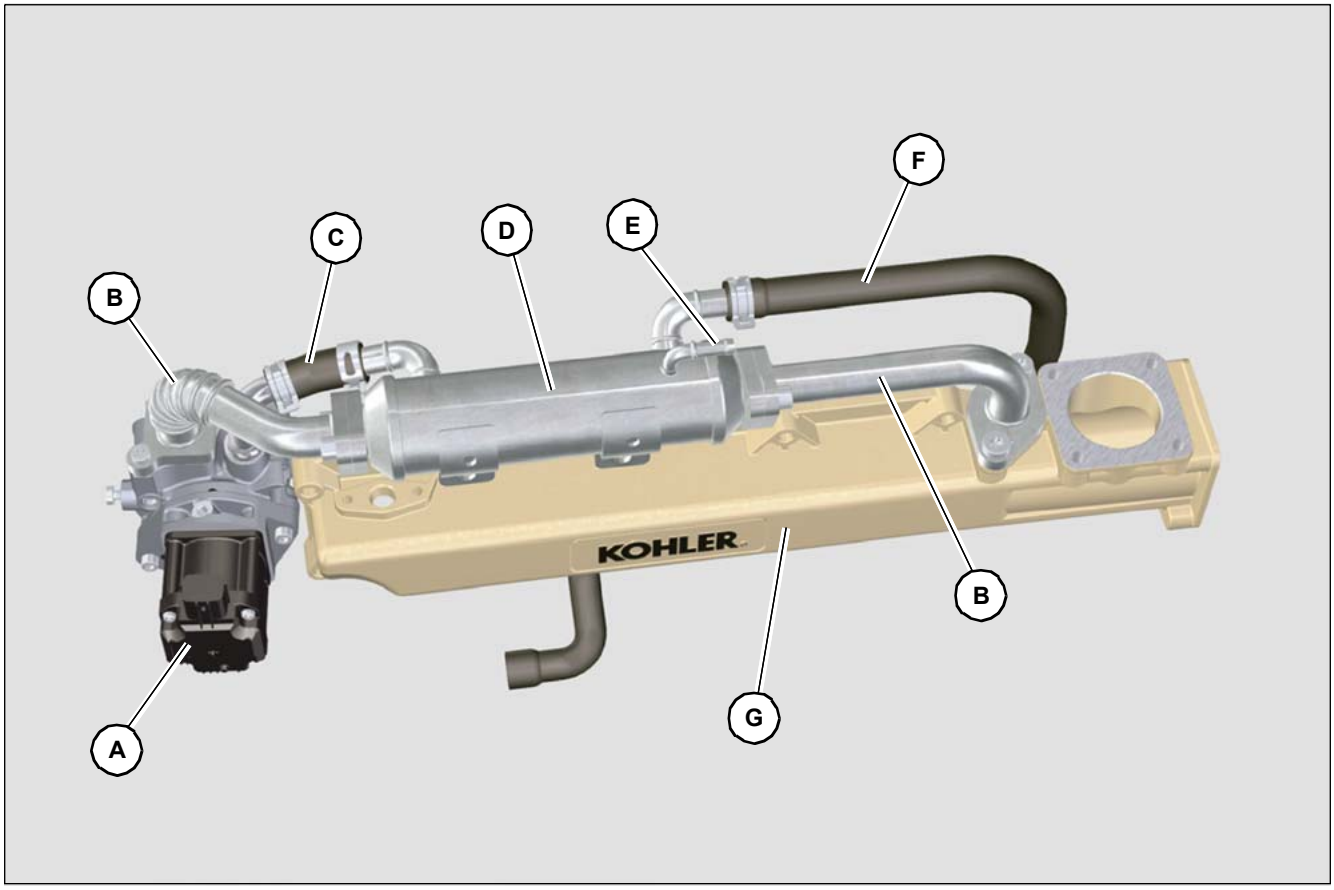

Pos.	Component
A	EGR valve
B	Through-way line for EGR gas
C	Coolant outlet line
D	EGR cooler
E	Water flush connection
F	Coolant supply line
G	Suction collector pipe

Coolant system overview

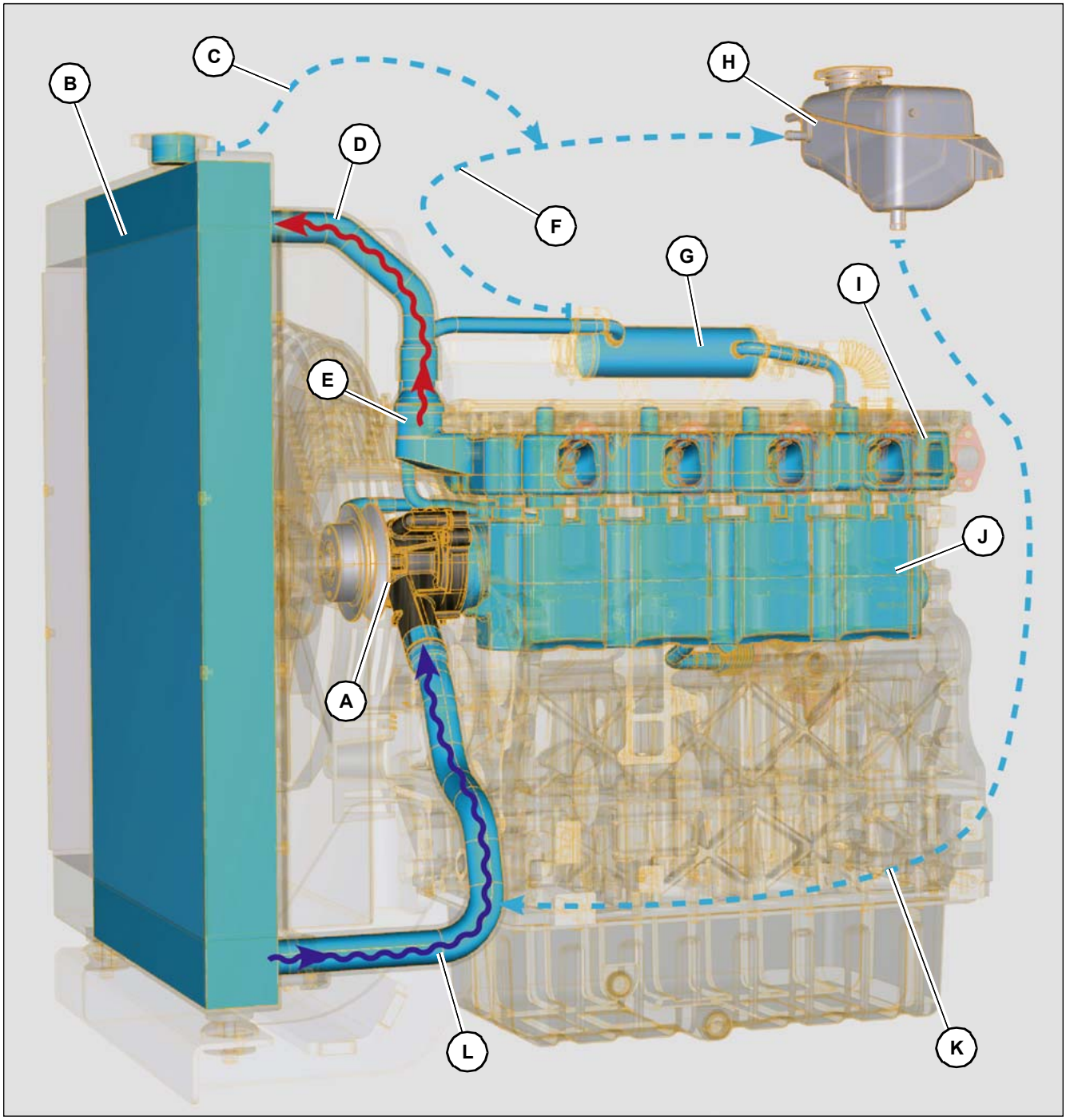

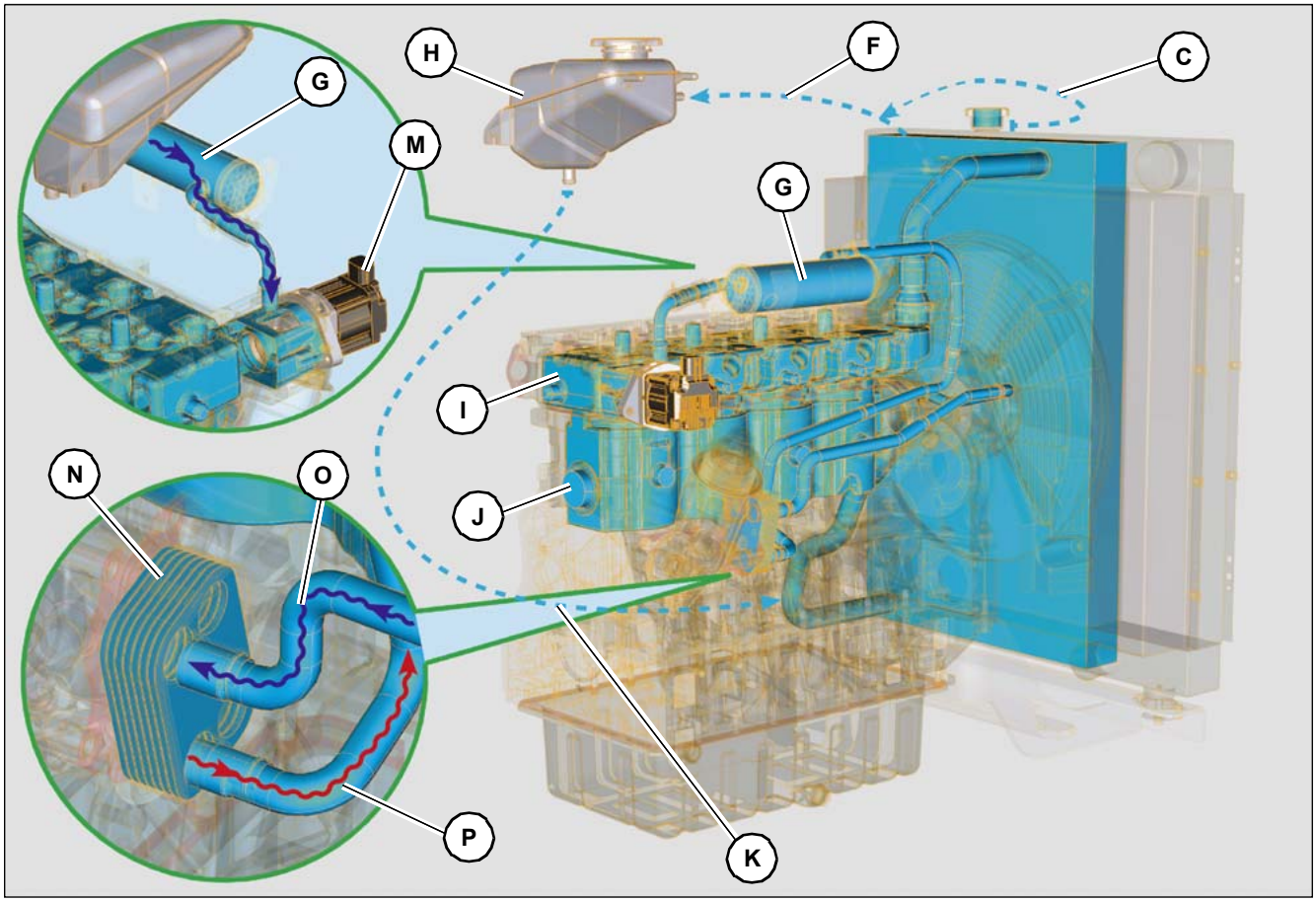

Pos.	Component
A	Coolant pump
B	Radiator
C	Cooler vent line
D	Coolant reflux to cooler**B**
E	Thermostat
F	EGR cooler vent line
G	EGR cooler
H	Coolant reservoir
I	Cylinder head cooling
J	Cylinder cooling
K	Reflux line to coolant suction **L**
L	Coolant suction
M	EGR valve
N	Engine oil cooler
O	Coolant inlet, engine oil cooler
P	Coolant outlet, engine oil cooler

2.7 Intake and exhaust system

Overview of suction and exhaust circuit

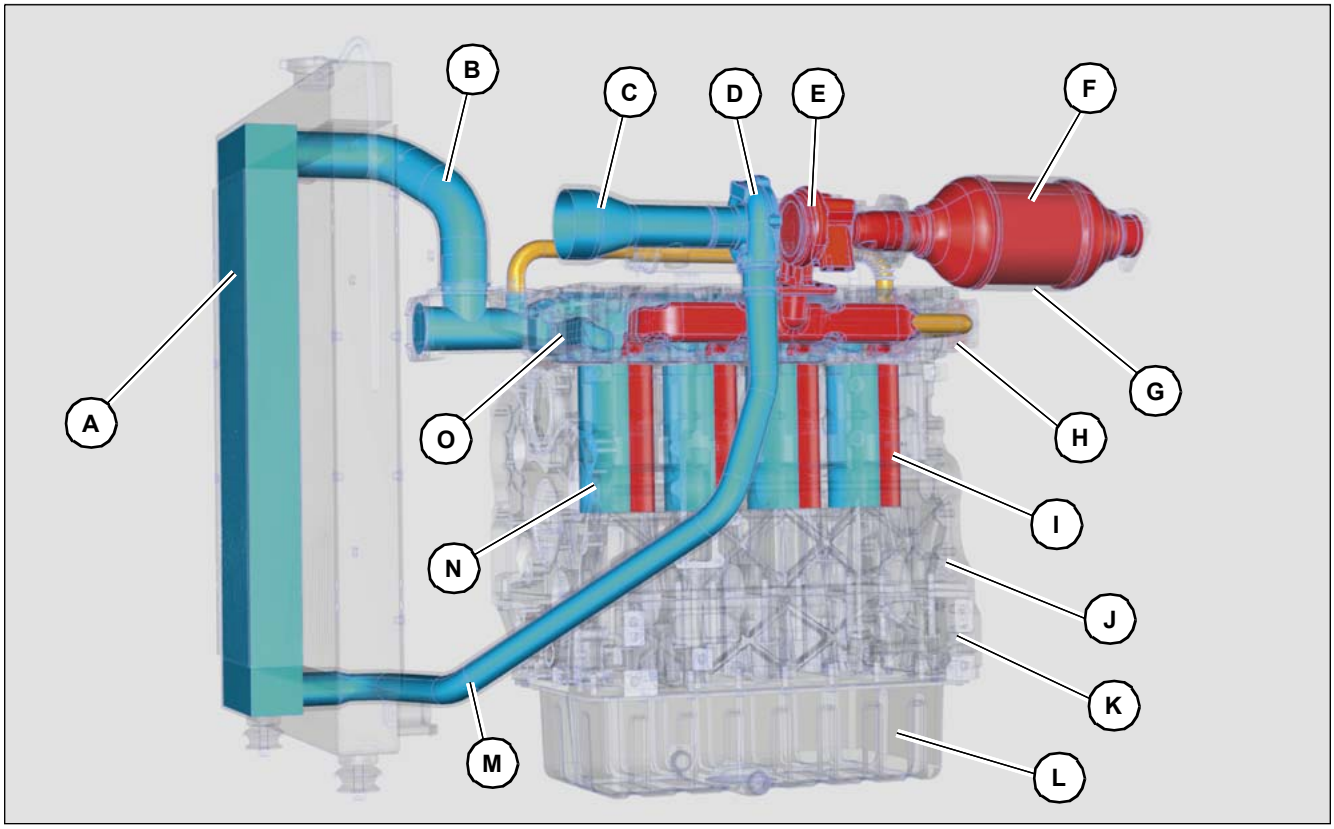

Colour	Description
	Suctioned-up air
	Returned exhaust
	Ejected exhaust

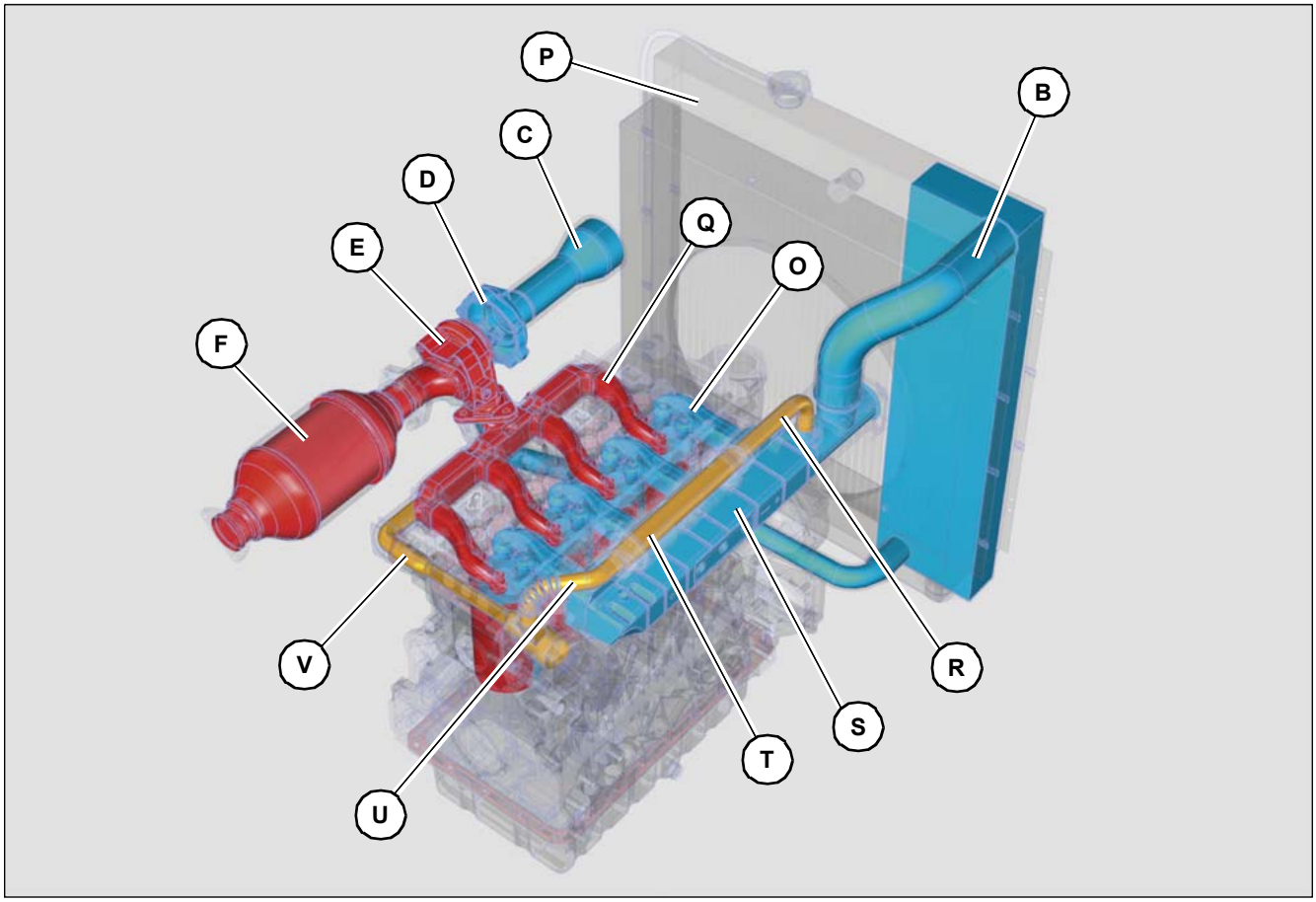

Colour	Description
	Suctioned-up air
	Returned exhaust
	Ejected exhaust

Pos.	Component
A	Charge-air cooler
B	Charge-air hose from charge-air cooler **A** to suction manifold **S**
C	Air suctioned off by air filter
D	Exhaust turbo loader (fresh-air side)
E	Exhaust turbo loader (exhaust side)
F	Oxidising exhaust gas
G	Diesel particulate filter (DPF)
H	Exhaust manifold
I	Exhaust outlet, cylinder
J	Upper crankcase
K	Lower crankcase
L	Engine oil sump
M	Charge-air hose from exhaust turbo loader (fresh-air side) **D** to charge-air cooler **A**
N	Intake air, cylinder
O	Suction air, cylinder head
P	Radiator
Q	Exhaust outlet, cylinder head
R	Exhaust return from EGR valve to suction manifold **S**
S	Suction collector pipe
T	Exhaust cooling (in EGR cooler)
U	Exhaust outlet, EGR-valve
V	Exhaust reflux to EGR valve

Function description of suction and exhaust system

The air temperature in the intake manifold **S** may never exceed the ambient temperature by more than 10°C (50°F).

The filtered air is suctioned off by the exhaust turbo loader D which compresses the air and conveys it to the charge-air cooler **A**.

Due to this compression, the temperature of the intake air rises and the charge-air cooler **A** cools it down. This way, the combustion performance in the cylinders is maximised optimally.

From the charge-air cooler **A** the air is conveyed into the suction manifold **S** and then to the cylinders via the channels in the cylinder head. Inside the cylinder, the compressed air that has been mixed with the fuel is converted into exhaust during combustion. The exhaust is ejected by the cylinders and conveyed to the exhaust manifold **H**. The exhaust manifold H conveys the exhaust along two lines:

- ➥ 1st line: to the exhaust turbo loader **E** (the exhaust activates the turbines), afterwards, the exhaust is conveyed on to the diesel particulate filter (DPF) **G**, which converts the harmful substances. Next, the exhaust gases are finally ejected.
- ➥ 2nd line: to the EGR circuit, which returns part of the exhaust to intake suction. This way, less oxygen is burned when no output is required. This decreases emission of pollutants even further.

The EGR circuit is controlled by the motor electronics **N005**. This confirms the EGR valve, when the diesel engine does not have to output.

The EGR-circuit is fitted with a heater box (EGR cooler), which cools the returned exhaust. This way, the combustion performance in the cylinders is maximised optimally.

2.8 Electric components

Overview of engine wiring harness

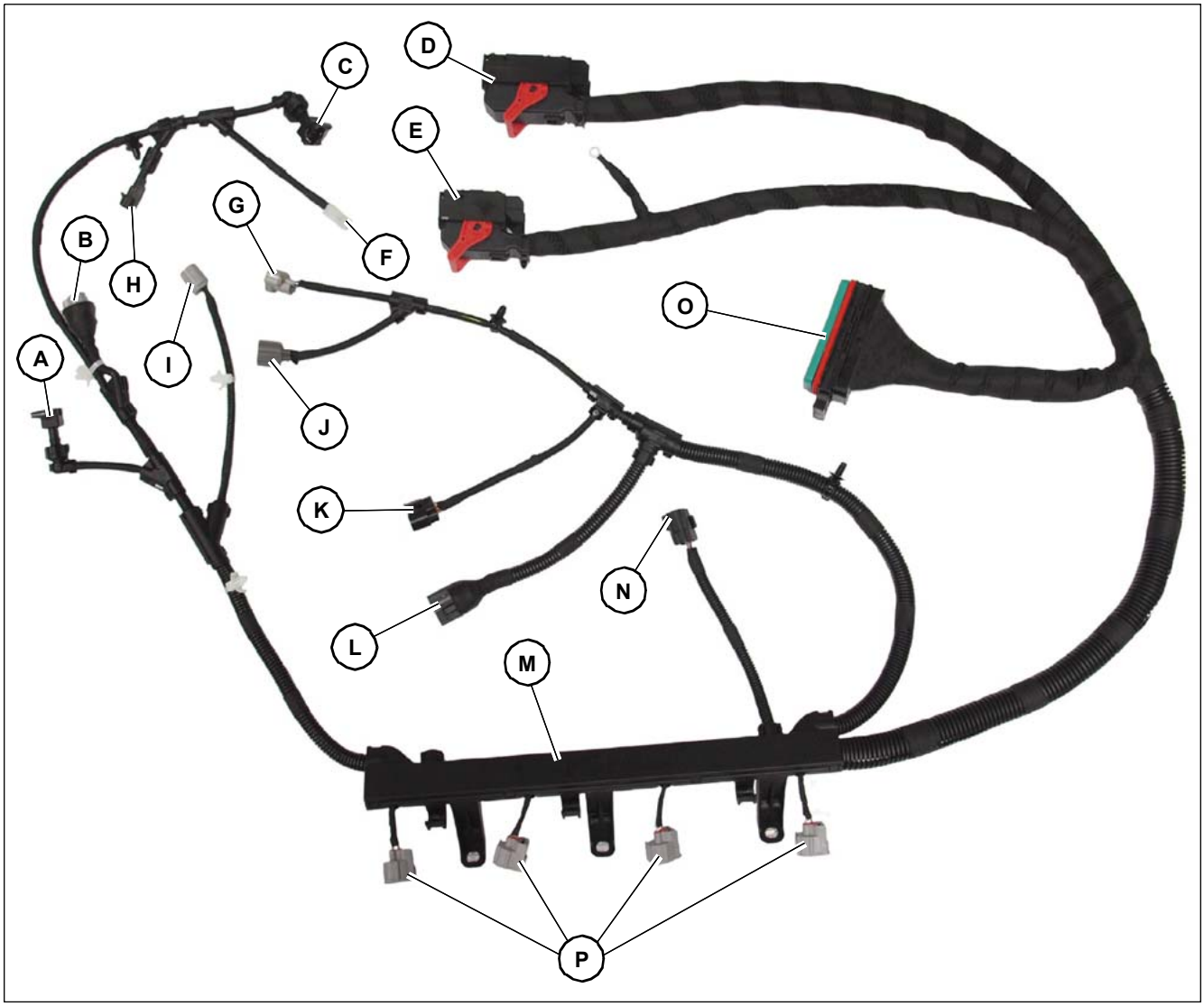

Pos.	Component
A	Coolant temperature sensor connector
B	Engine phase sensor connector
C	Engine oil pressure switch connector
D	Motor electronics plug A **N005**
E	Motor electronics plug B **N005**
F	Motor starter connector
G	Fuel pressure-limiting valve connector
H	Alternator connector D+
I	Engine speed sensor connector
J	Fuel temperature sensor connector
K	T-MAP sensor connector
L	EGR valve connector
M	Cable holder
N	Common Rail pressure sensor connector
O	Plug for vehicle interface
P	Injector connectors

Overview of motor control unit N005

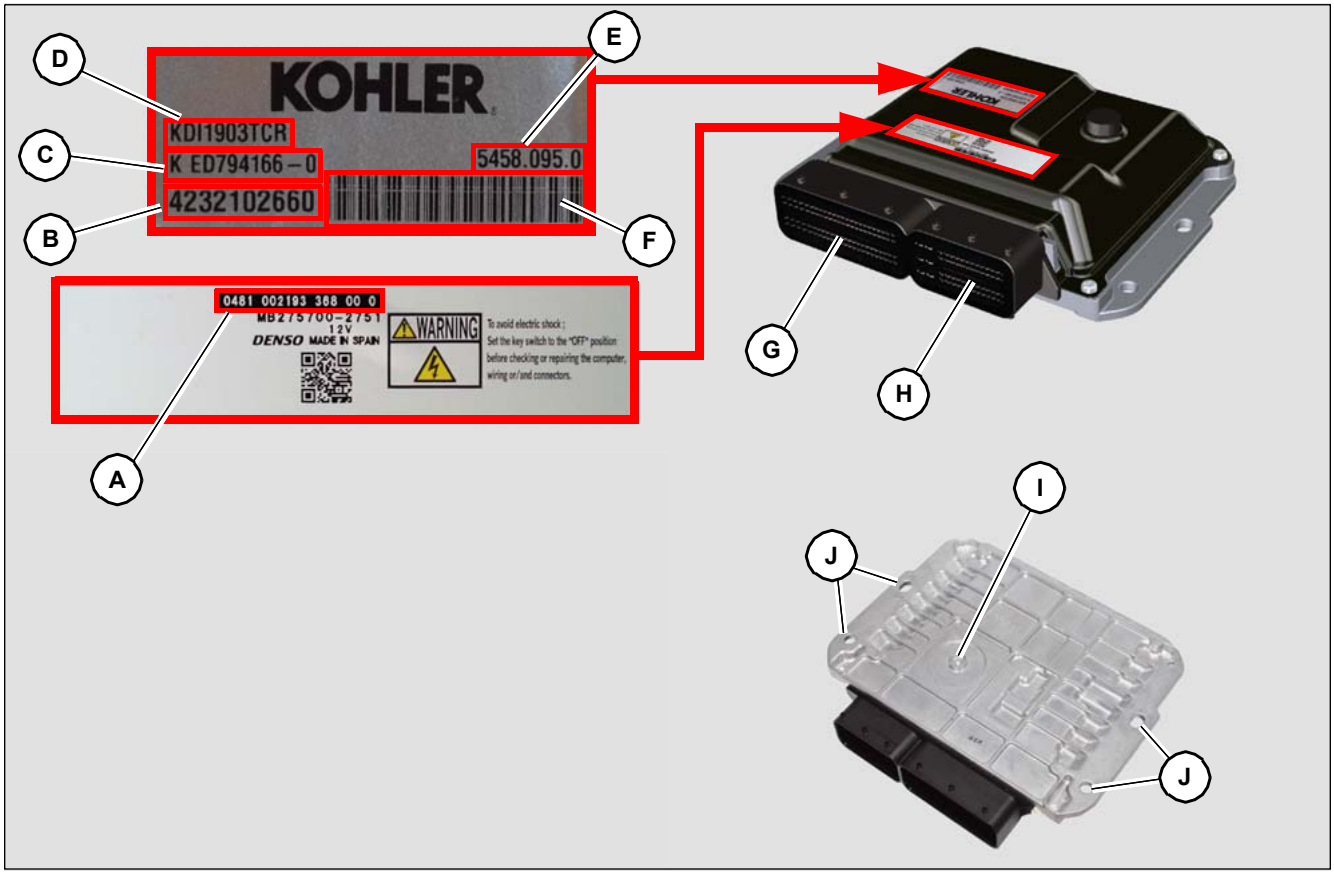

Pos.	Component
A	Unit ID code
B	Serial number of engine
C	Engine data
D	Motor model
E	Registration number
F	Barcode of motor serial number
G	Plug A (Motor electronics plug A)
H	Plug B (Motor electronics plug B)
I	Barometric cap
J	Fixture points

Function description of motor control unit N005

This is the central processor for monitoring and controlling the functions of the motor.

Information

The motor control unit **N005** may only be used with the configuration developed by **KOHLER** for each individual motor.

- ► The motor control unit may **N005 NOT** be mounted to another motor or replaced with the motor control unit of a different motor.
- ► Even though the motors look the same, they contain different fittings.
- ► If a new motor control unit N005 has to be installed, the original configuration for this specific motor must be reinstalled.

Function description of the diesel engine speed sensor

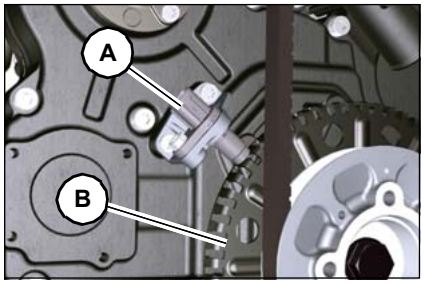

The speed sensor **A** is attached to the distributor housing.

The sensor records the signal from the impulse ring **B** (60-2 spikes) on the belt pulley of the crankshaft and sends it as an analogue signal to the motor control unit **N005**.

The speed sensor **A** generates a 5 V PWM signal with a reverb effect during rotation of the crankshaft and thus records the speed and position.

Using the data sent by the speed sensor **A** the motor control unit **N005** can control advancement for the fuel injection of the individual cylinders.

Function description of the camshaft sensor

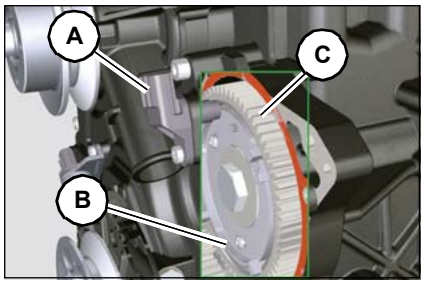

The camshaft sensor **A** is attached to the distributor housing.

The function of the camshaft sensor **A** is to detect the position of the camshaft **C** in relation to the drive shaft and subsequently the position of the pistons in relation to the top dead centre. The sensor records the signal from the impulse ring **B** on the camshaft **C** and sends it as an analogue signal to the motor control unit **N005**.

The camshaft sensor **A** generates a 5 V PWM signal with reverb effect during rotation of the camshaft and thus records the four cycles of the first cylinder. Based on a set calculation model, the motor control unit **N005** can subsequently determine the cycles of the other cylinders.

Using the data sent by the camshaft sensor **A** the motor control unit **N005** can control advancement for the fuel injection of the individual cylinders.

Function description of T-MAP sensor

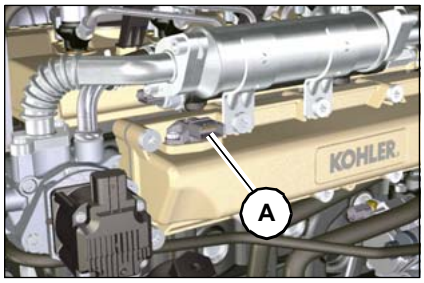

The T-MAP sensor **A** is on the suction manifold.

The T-MAP sensor **A** records the inlet pressure via changes in the electric current and the air temperature through changes in the electric resistance. The T-MAP sensor **A** sends the signal to the motor control unit **N005**, which processes the values and adjusts the injection times.

The following tables shows the readings for the electric resistance depending on the temperature of the intake air.

Temperature (°C)	Fahrenheit (°F)	R (Ω)
-33	-27,40	23475–25945
0	32	5370–5935
25	77	1900–2100
50	122	772–854
100	212	177–195
120	248	107–119

Function description of Common Rail pressure sensor

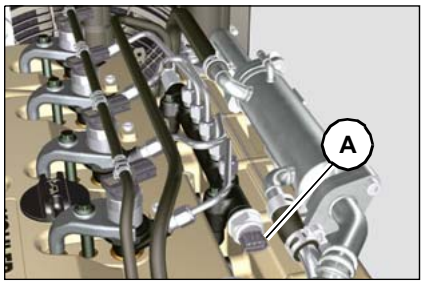

The pressure sensor **A** on the Common Rail records the fuel pressure through changes it measures in the electrical voltage.

Based on the sent data, the motor control unit **N005** controls the valve for fuel intake at the high pressure pump and adjusts the injection times as required.

Function description of water sensor in the fuel filter

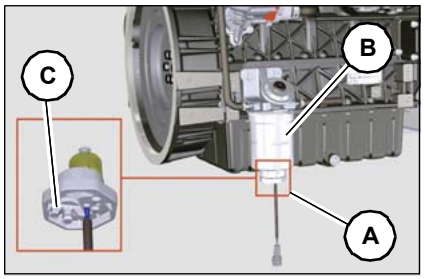

The water sensor **A** in the fuel filter **B** indicates the presence of water in the fuel.

Because of its greater specific gravity, the water in the fuel separates and goes down to the lowest point of the fuel **B**. A special sensor is fitted here, which sends an alarm signal via the motor control unit **N005** to the round gauge **P014**.

Water in the fuel can be drained off via the thumb nut **C** at the bottom of the sensor body, as required. In this way, damage to the components of the fuel circuit can be prevented.

Function description of fuel temperature sensor

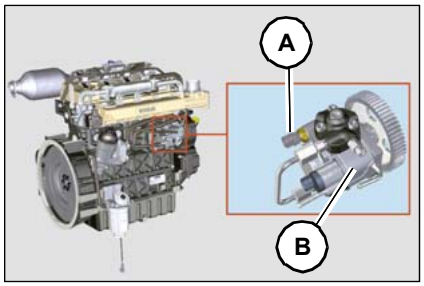

The sensor **A** for fuel temperature is mounted to the high pressure pump **B**.

The sensor **A** for fuel temperature measures the temperature of fuel at the entrance to the high pressure pump **B**.

The signal sent to the motor control unit **N005** is digital.

The resistance recorded by the motor control unit **N005** is proportional to the fuel temperature.

Function description of the engine oil pressure switch

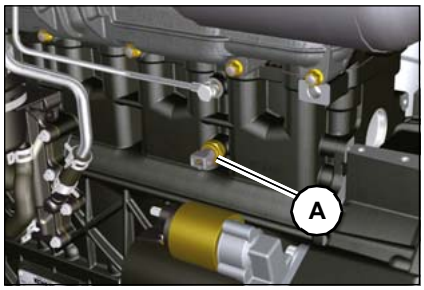

The engine oil pressure switch **A** is mounted to the crankcase.

This is an N/C sensor calibrated to a pressure of 0.8 bar ± 0.1 bar (11.6 ± 1.4 psi).

At a low pressure of engine oil, the engine oil pressure monitor **A** switches the circuit to ground and ensures that the respective symbol lights up in the display **P014**.

Function description of diesel engine temperature switch

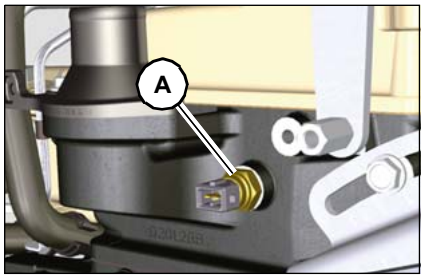

The diesel engine temperature switch **A** is mounted to the cylinder head.

The diesel engine temperature switch **A** is used by the motor control unit **N005** to control the signal to the pilot lamp indicating excessive temperature and also to control the fan.

Activation temperature for pilot lamp +106°C – +108°C.

Temperature (°C)	Fahrenheit (°F)	Properties	
		R min (Ω)	R max (Ω)
-40	-40	38,313	52,926
0	32	5,227	6,623
140	284	0,067	0,076

Function description of generator (alternator)

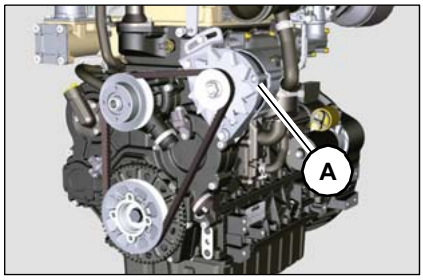

The generator **A** is drive by a crankshaft belt.

Technical data	
Ampere	80 A
Volt	12 V

Function description of starter motor

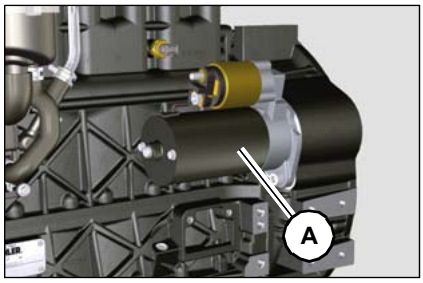

Technical data	
Volt	12 V
Power	2 kW
Direction of rotation	Counter-clockwise (view from distributor side)

Function description of EGR valve

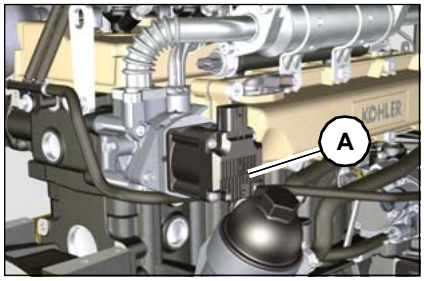

The EGR valve **A** is for exhaust gas recirculation.

The opening and closing of the EGR valve **A** is controlled by the motor control unit **N005**, and depends on the parameters: acceleration, diesel engine speed and the required performance.

A control unit is integrated in the EGR valve **A**, which executes an independent function test whenever the ignition is switched on.

In the event of a malfunction, a signal is sent to the motor control unit **N005** and a warning message appears in the display **P014**.

Function description of control valve for fuel suction

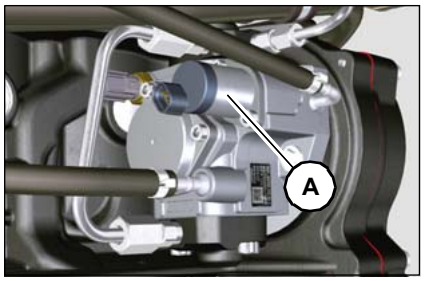

The control valve for fuel intake **A** is mounted to the high pressure pump.

The control valve for fuel intake **A** is controlled by the motor control unit **N005**, which regulates fuel intake based on the pressure of fuel in the common rail, restricting the supply of fuel to the high pressure pump.

A digital signal changes the opening width of the valve, relative to the required supply of fuel to the common rail.

2.9 Exhaust after-treatment EAT

The exhaust after-treatment describes the procedure in which the combustion gases, after they have left the combustion chamber, are cleaned in a mechanical, catalytic or chemical way.

Terms for the various emissions levels	
EC – European Commission	EPA – US Environmental Protection Agency
Level IIIA	Tier 3
Level IIIB	Tier 4 interim Tier 4i Tier 4a
Stage IV Level IV final	Level 4 Final Tier 4f Tier 4b

Abbreviations

Abbreviation	Explanation	Remarks
EAT	Exhaust-gas treatment system	Exhaust After-treatment
DOC	Diesel oxidation catalyst	Diesel Oxidation Catalyst
DPF	Diesel particulate filter	Diesel particulate filter
CSF	Diesel oxidation catalyst (DOC) and diesel particulate filter (DPF) integrated together	Coated soot filter or catalysed soot filter
EPA	American environmental protection agency	Environmental protection agency

Abbreviation	Explanation
NO	Nitrogen monoxide
N_2	Nitrogen oxide
NO_2	Nitrogen oxide
NO_X	Nitrogen oxide
NH_3	Ammonia
CO	Carbon monoxide
H_2O	Water

Diesel oxidation catalytic converter DOC

The DOC module consists of a diesel oxidation catalytic converter DOC, which with its catalytic surface oxidizes the carbon monoxide (CO) and the unburned hydrocarbons (HC). Carbon monoxide (CO) will also be oxidized to carbon dioxide (CO_2) in a temperature range between 200°C (392 F) and 450 °C (842 F).

Diesel particulate filter DPF

In the DPF, the particles accumulate that are combusted with the nitrogen dioxide at a sufficient exhaust fume temperature. As a prerequisite for this process, a minimal NO_X- soot ratio must be present in the engine exhaust fumes. Only in this way is a continuous regeneration of the DPF made possible.

Coated Soot Filter or Catalyzed Soot Filter CSF

The particulate filter system consists of a diesel oxidation catalytic converter DOC and an integrated diesel particulate filter DPF, which is called a CSF system (Coated Soot Filter or Catalyzed Soot Filter).

DOC with exhaust muffler

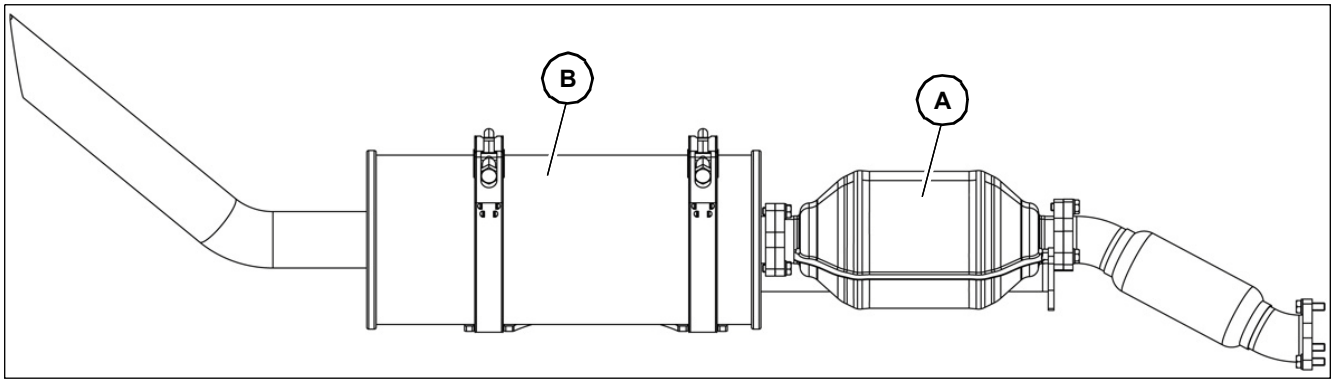

POS.	Explanation
A	Diesel oxidation catalyst
B	Silencer

- The exhaust system is used for emission standard IIIB or Tier 4 interim.

DOC with DPF (option)

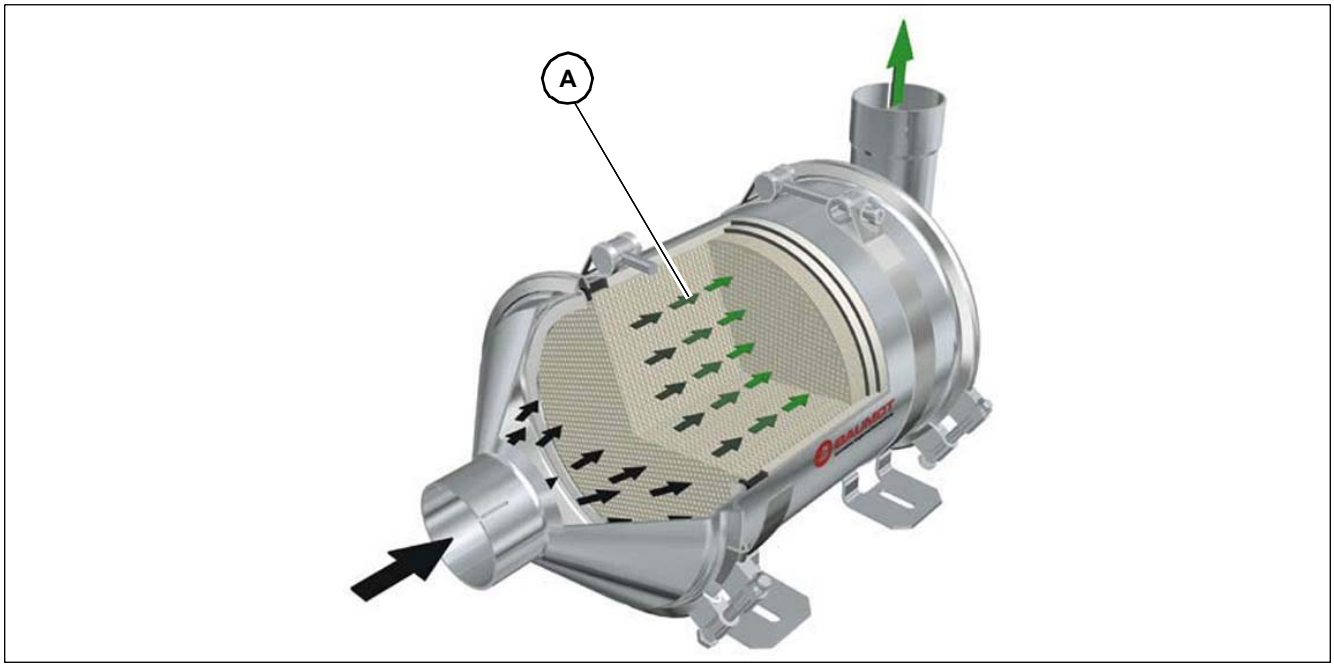

The main area of application for the diesel particle filter is any diesel operated vehicle that is also used in enclosed spaces.

The diesel particle filter **A** with stainless steel housing and a filter medium made of cordierite removes almost all impurities of the diesel exhaust gas. The use of a diesel particle filter **A** thus ensures low exhaust emission breathing air as well as the preservation of products, shops, and working areas.

Function description

The emission control system reduces both diesel particles as well as the gaseous pollutant carbon monoxide (CO) and other hydrocarbons. The particles are first filtered in monolith. Through contact with the coating of the monolith, these and other gaseous materials are catalytically converted into the harmless substances (CO_2 and H_2O). The particles are filtered as the exhaust gas flows through the porous channel walls of the monoliths. However, the inflow channels are closed at the end. The exhaust is thus forced through the coating on the channel surface and the thin partitions, which are approx. 0.4 mm (0.0157 inches) thick. The multitude of individual channels yields a very large filtering surface and thus a high storage capacity for soot particles.

The current values of the pressure and temperature can be optionally shown on the display. The pressure and temperature values are continually stored.

Alarms remain active until the values return to the normal range. The acoustic signal is switched off by confirming (= accepting). The measurable pressure range is 0 to 600 mbar (8.70 psi). The temperature is displayed in the range from 50°C (122°F) to 1.050°C (1922°F).

DOC with DPF

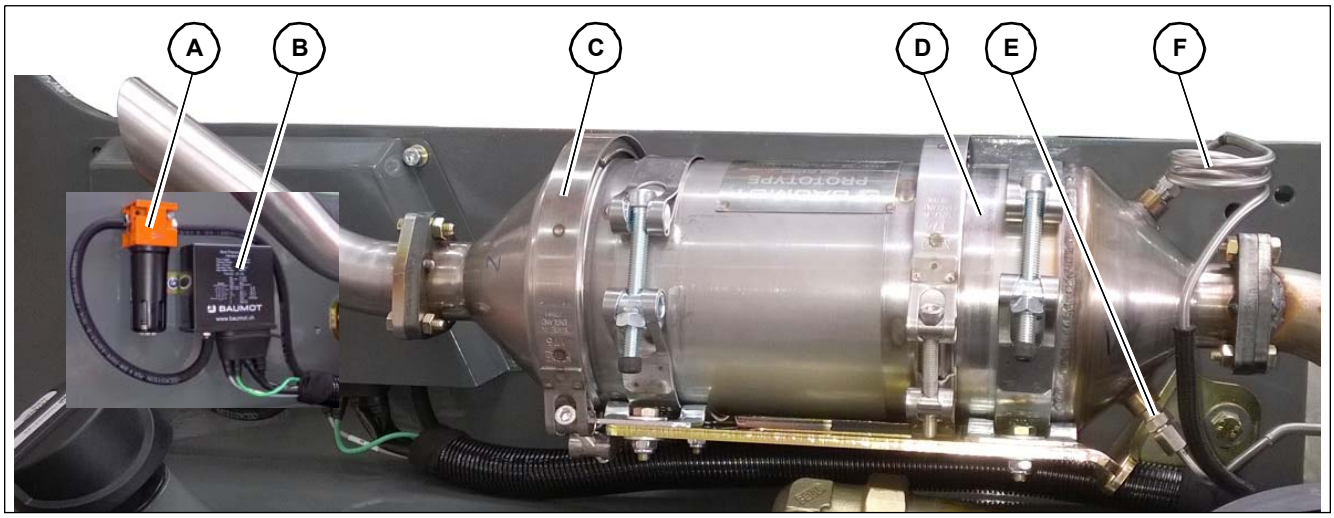

POS.	Explanation
A	Condensation trap
B	Data logger
C	Diesel oxidation catalyst
D	Diesel particulate filter
E	Temperature sensor
F	Pressure pipe

Overview of the total system

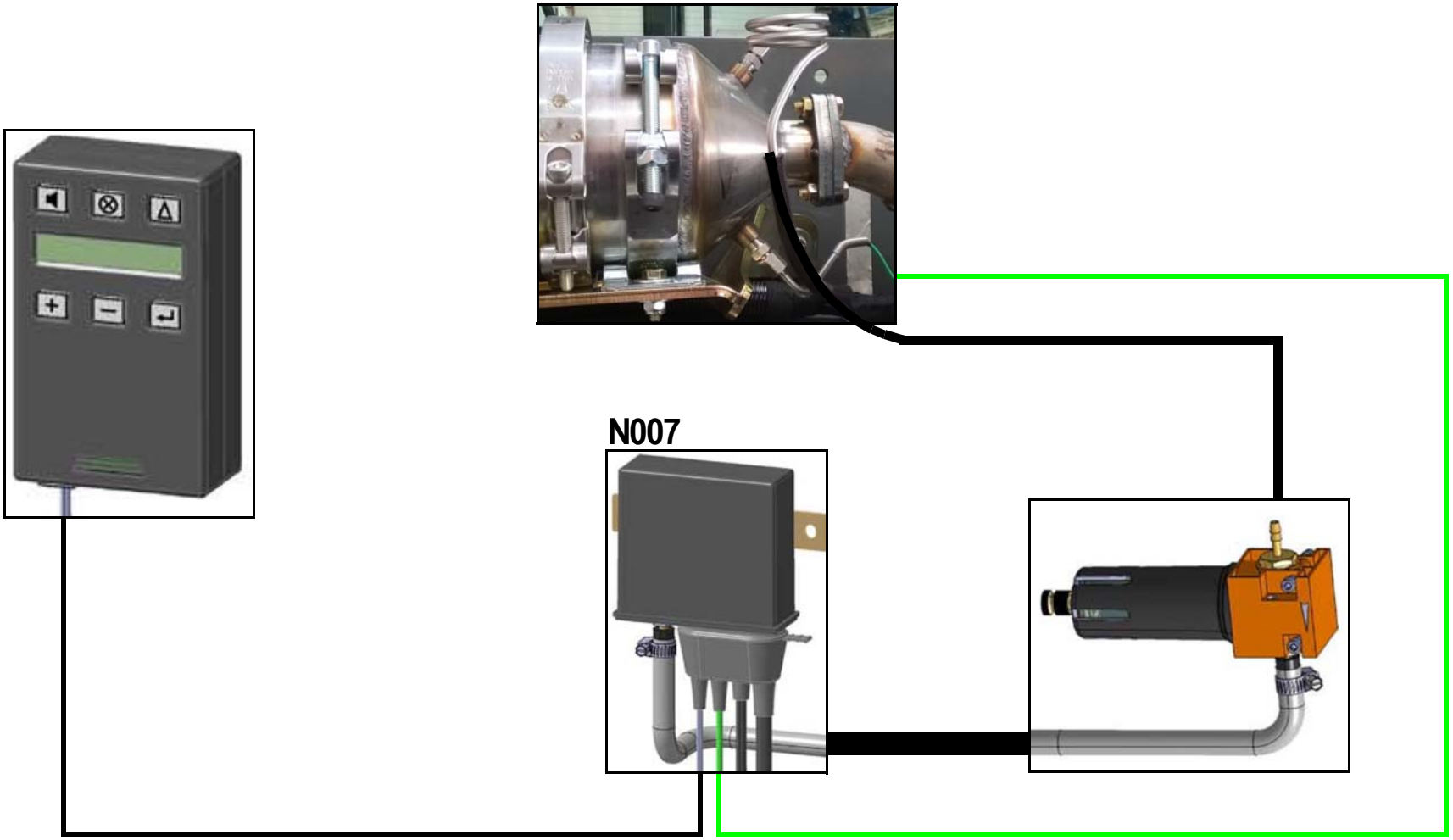

Note

The DPF-BA-B is continually and automatically regenerated when the exhaust temperature rises above 220°C (428°F).

This regeneration temperature must be achieved for approx. 25% of the total operating time of the diesel engine. If this temperature is not reached over a longer period, the particle filter is loaded with soot particles, and the exhaust back pressure increases.

The longer the exhaust temperature remains under the regeneration temperature, the higher the exhaust back pressure increases. This is displayed by the data logger**B** or the pressure gauge (if available). The soot emissions of the diesel engine also increase with increasing backpressure.

Information

Longer idling times of the diesel engine should therefore be avoided.

The filter function monitoring (electronic back pressure monitoring with optical/acoustic warning) is installed in parallel with the particle filter. If the back pressure of 250 mbar (3.6 psi) is exceeded, this will trigger the optical (after 5 s) and acoustic alarm (after 2 min).

If the backpressure is high, but after the alarm of the electronic backpressure monitoring (lighting up of warning lights/signal tone), the operator must initiate filter regeneration by increasing the exhaust gas temperature. The procedure is as follows.

Drive diesel engine with a heavy (full) load (approx. 2 min)

After a short time (approx. 1-2 min), the warning light or signal tone (buzzer) go out/die down and the pressure on the pressure gauge will have dropped noticeably.

The operator or machinist must be trained in the aforementioned measures in the case excessive back pressure (warning light, signal tone, high back pressure value). Damage to the particle filter caused by longer filter operation with excessive exhaust back pressure will invalidate the warranty. If the aforementioned measures for initiating the filter regeneration to not lead to a lowering of the exhaust back pressure (warning light goes out/signal tone dies down and decrease of the back pressure value), the particle filter should be immediately put into operation. Afterwards, the filter and DOC must be cleaned under the direction of a BAUMOT technician. If an excessive backpressure is displayed, in addition to cleaning the filter and DOC, a maintenance and review of the backpressure line and the condensate trap should be implemented. This maintenance and review should be done after every 500 hours of operation.

2.10 Start diesel engine control

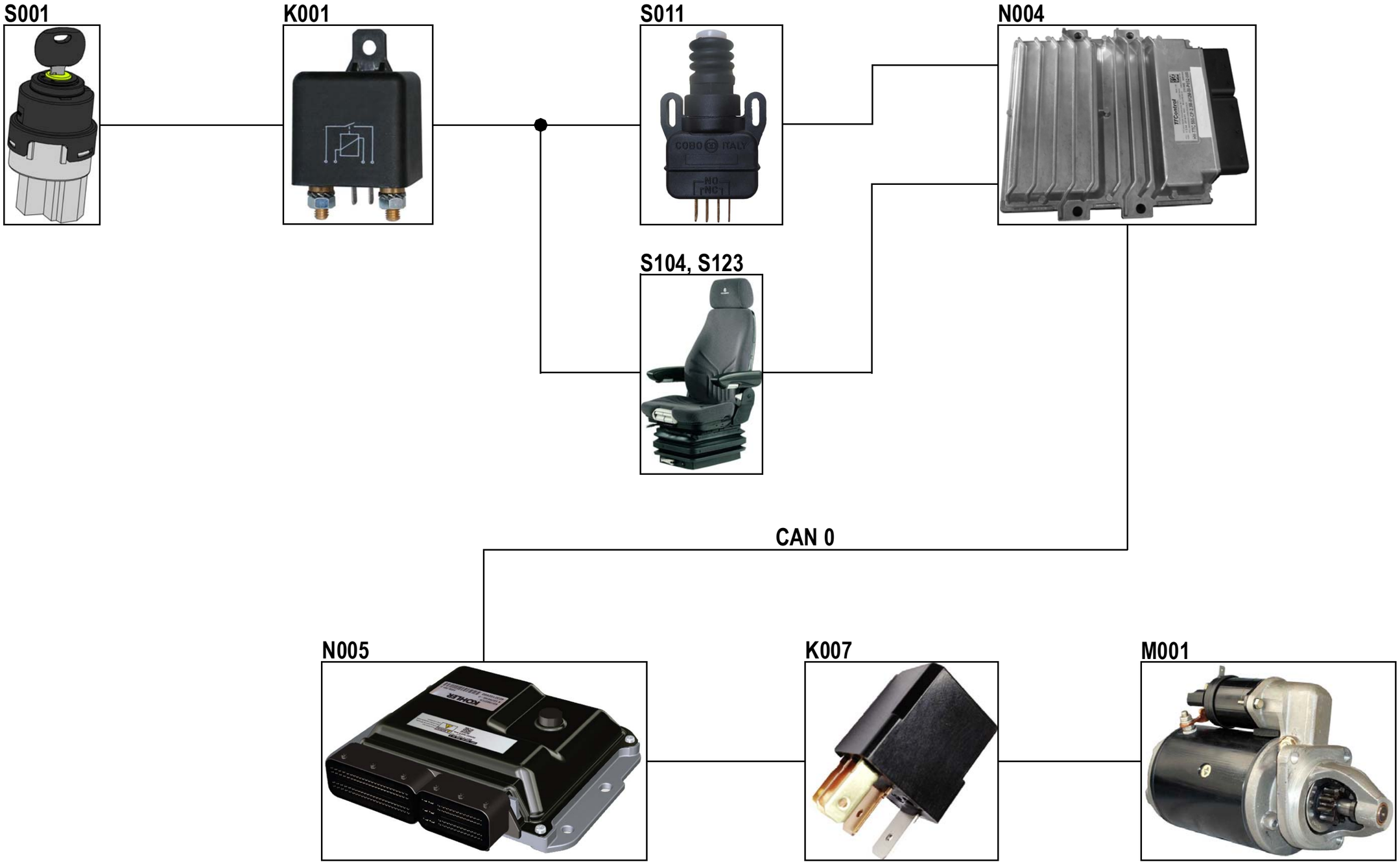

Starting the diesel engine

Pos.	Component	Remarks
K001	High-current relay	12 V / 200 A
K007	Starting relay	12 V / 35 A
M001	Starter	12 Volt / 2 kW
N004	Controller N004	HY-TTC 580-CP
N005	Diesel engine electronics	Kohler
S001	Preheating start switch	–
S011	Handbrake switch	–
S104	Operator presence switch	–
S123	Belt contact switch (Opt)	–

High current relay K001

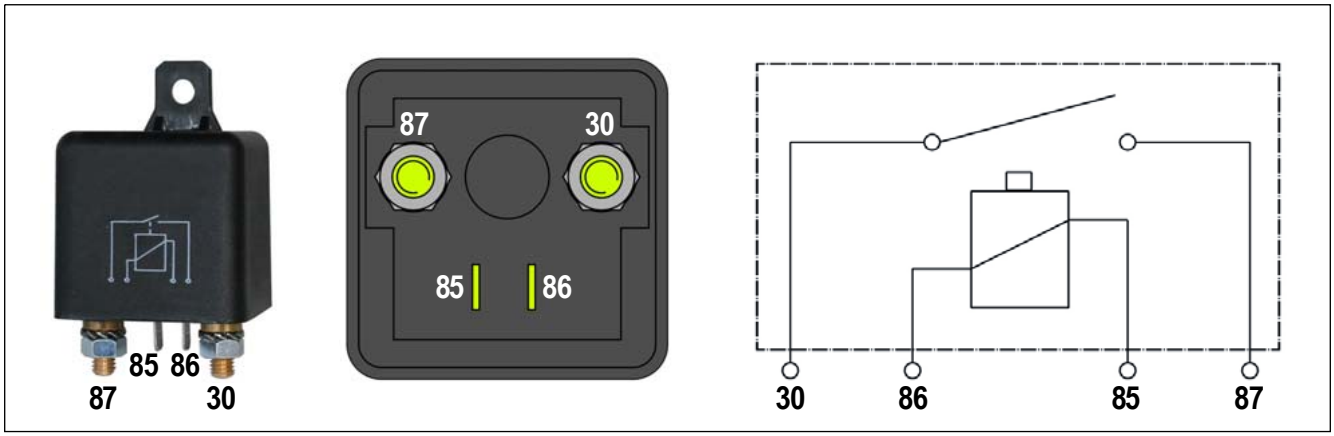

PIN	Connection	to PIN	Measuring range
30	On-board voltage F001/100A	–	12 V
85	Input from preheating start switch **S001**	Clamp (15)	12 V
86	Ground		
87	Output to printed circuit board **N033**	X2	12 V

Function description

The entire electrics of the vehicle are supplied with electricity via the high current relay **K001**.

Function

When the ignition is started, the solenoid of the high current relay **K001** is energized via the clamp **85** from the pre-heating start switch**S001**. This closes the high current relay **K001** and connects the clamps **30** and **87**.

The current coming from battery **G002** via fuse**F002** and the high current relay **K001** reaches the printed circuit board **N033** and thus provides the entire electronics of the vehicle with current.

Handbrake switch S011

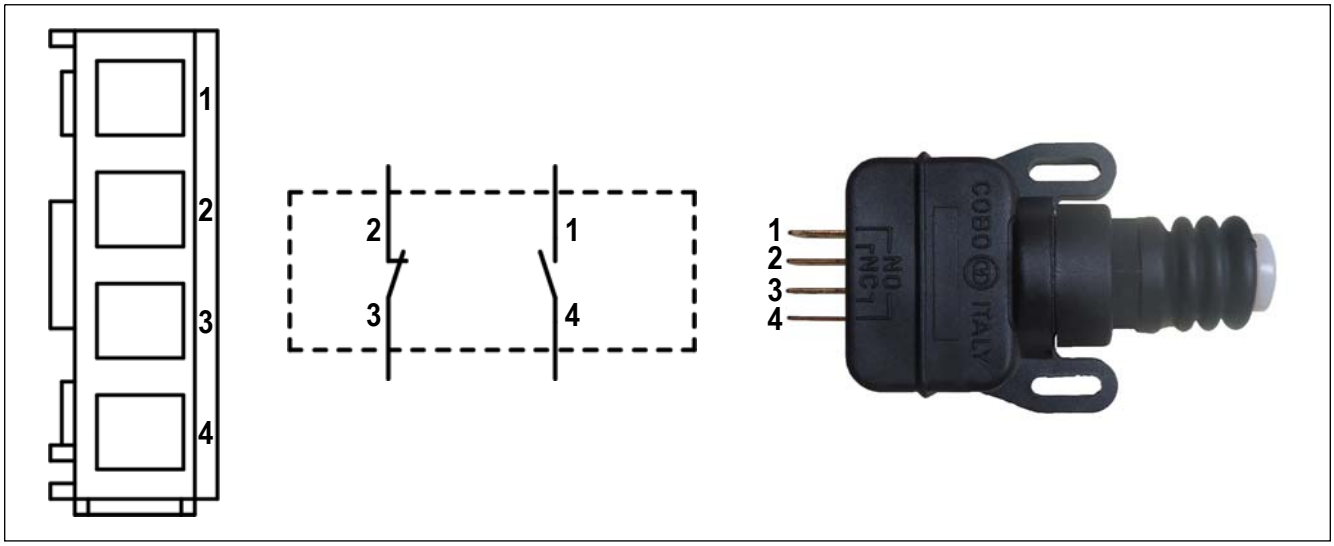

PIN	Connection	to PIN	Measuring range	
			not actuated	Actuated
1	Board voltage of F014/5A	XP03 (15)	12 V	12 V
2	Sensor ground	XE04 (2-43)	Ground	
3	Output to the controller **N004**	XE15 (1-47)	–	Ground
4	Output to the controller **N004**	XE15 (1-23) K111 (86)	0 V	12 V

Release the parking brake

If the parking brake is released, the hand brake switch **S011** releases the signal for driving.

Monitoring the parking brake

The hand brake switch **S011** and control lamp **H018** display when a parking brake has been engaged.

Start interlock

If the hand-brake switch **S011** is not activated (parking brake is on), the vehicle can be started.

If the hand-brake switch S011 is activated (parking brake is released), the vehicle cannot be started.

Operator presence switch S104

The seat contact switch **S104** is composed of two switches that have been put into a single casing.

Driver not seated on the seat

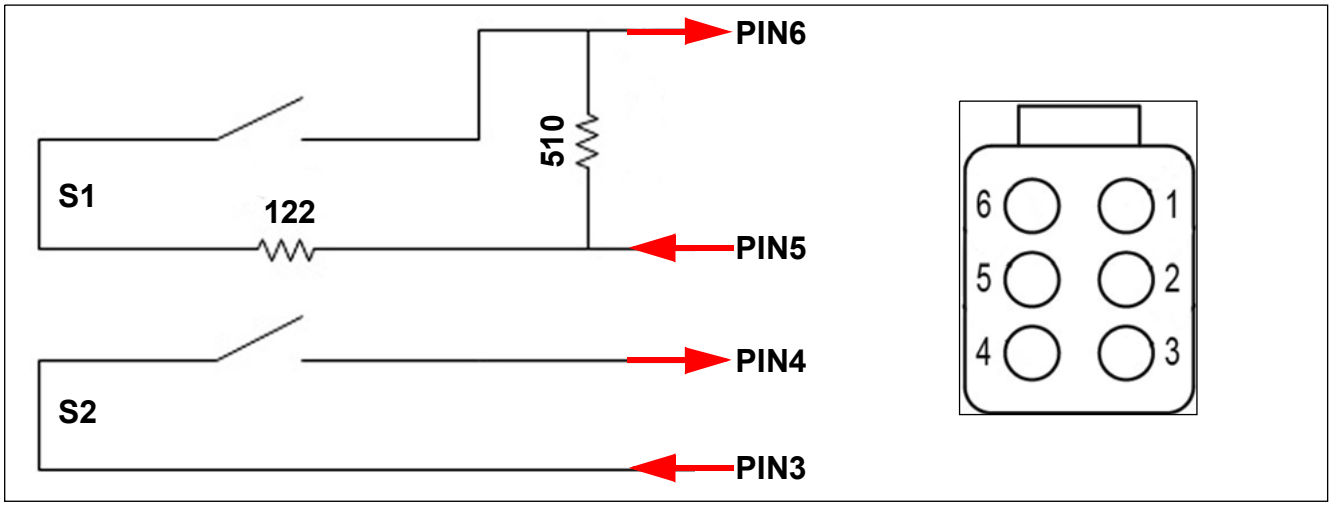

PIN	Connection	To PIN	Measuring range
1	Board voltage F038/25A (for air cushioned seat option)	–	12 V
2	Ground	Cabin	Ground
3	On-board voltage F014/5A	–	12 V
4	Signal to the controller N004	XE15 (1-39)	0 V
5	Output from controller N004	XE15 (1-04)	12 V
6	Signal to the controller N004	XE04 (2-44)	2 – 3 V

Operator not on seat when the function starts

Seat contact switch open

- Diesel engine cannot be started.
- The travel direction cannot be selected.

The following proportional valves are not energized.

1. Raising **Y066,** lowering **Y067** of telescopic arm
2. Fill shovel **Y068,** Empty shovel **Y069**
3. Retraction **Y023,** extension **Y024** of telescopic arm
4. Locking **Y016,** unlocking **Y017**
5. Solenoid valve for quickhitch lock **Y025**

Upper/lower rear additional control circuit

1. Raising **Y044** or lowering **Y045** tipper or raising **Y044** or lowering **Y045** auto hitch
2. Auto hitch tipper switch-over **Y046**
3. Unlock auto hitch **Y047**

Operator not in seat during active function

The following valves remain energized, even when the operator leaves the seat during the activated function.

Upper/lower rear additional control circuit

1. Raising **Y044** or lowering **Y045** tipper or raising **Y044** or lowering **Y045** auto hitch
2. Auto hitch tipper switch-over **Y046**
3. Locking permanent function of third control circuit **Y016**
4. Solenoid valve for changeover of front 4th control circuit **Y051**
5. PTO solenoid valve **Y120**
6. Rear hitch solenoid valves **Y117**, **Y118**, **Y129**

If the operator leaves the seat for longer than 3 s, the following functions will be stopped.

1. Retraction **Y023,** extension **Y024** of telescopic arm
2. Raising **Y066,** lowering **Y067** of telescopic arm
3. Fill shovel **Y068,** Empty shovel **Y069**
4. Locking **Y016,** unlocking **Y017**
5. If the lowering function**Y067** is still active after 3 s, the lowering speed is throttled in relation to the driving speed until the standstill of the lowering movement.
6. Below a speed of 7 km/h (4.3 mph), the drive is switched into neutral if the operator leaves the seat for more than 5 s.
7. If the driving speed is below 0.5 km/h (0.3 mph), after 1 s, it will be switched to neutral and a warning tone will sound.
8. A warning signal sounds at speeds over 7 km/h (4.3 mph).

Driver seated on the seat

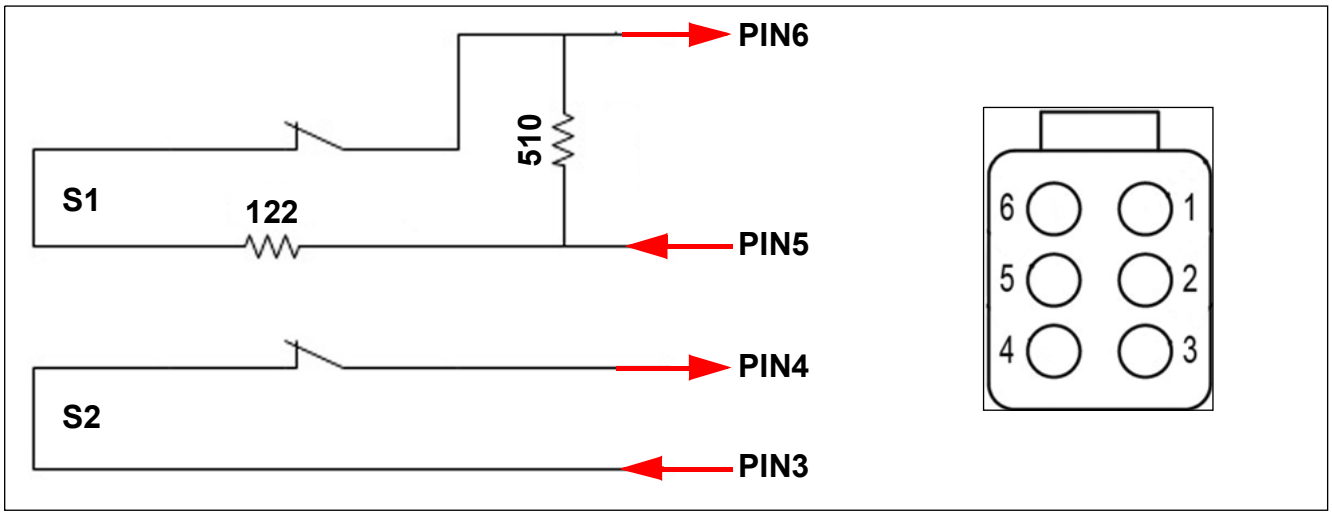

PIN	Connection	To PIN	Measuring range
1	Board voltage F038/25A (for air cushioned seat option)	–	12 V
2	Ground	Cabin	Ground
3	On-board voltage F014/5A	–	12 V
4	Signal to the controller N004	XE15 (1-39)	12 V
5	Output from controller N004	XE15 (1-04)	12 V
6	Signal to the controller N004	XE04 (2-44)	5 – 7 V

If a voltage of 5–7 V is applied to plug XE15 (1-04) and a voltage of 12 V to plug XE15 (1-39), the operator is in the operator's seat.

Seat contact switch closed

The vehicle can be used to its full extent

Machine runs without the driver on the seat

➥ The valves for the additional control circuits continue to be energised but have to be switched on before (operator on the seat)

If the operator leaves the seat for longer than 3 s, the following functions will be stopped.

1. Retraction **Y023,** extension **Y024** of telescopic arm
2. Raising **Y066,** lowering **Y067** of telescopic arm
3. Fill shovel **Y068,** Empty shovel **Y069**
4. Locking **Y016,** unlocking **Y017**
5. If the lowering function**Y067** is still active after 3 s, the lowering speed is throttled in relation to the driving speed until the standstill of the lowering movement.
6. Below a speed of 7 km/h (4.3 mph), the drive is switched into neutral if the operator leaves the seat for more than 5 s.
7. If the driving speed is below 0.5 km/h (0.3 mph), after 1 s, it will be switched to neutral and a warning tone will sound.
8. A warning signal sounds at speeds over 7 km/h (4.3 mph).

Belt contact switch S123 (option)

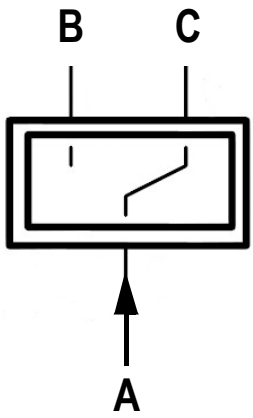

PIN	Connection	KCN (PIN)	Measuring range	
			buckled in	Not buckled in
A	On-board voltage F014/5A	–	12 V	12 V
B	Input to controller N004	XE15 (1-15)	10 V	0 V
C	Output to switching relay K110	K110 (86)	0 V	12 V

Seat belt not fastened

- Diesel engine cannot be started.
- The travel direction cannot be selected.

The following proportional valves are not energized.

1. Raising **Y066,** lowering **Y067** of telescopic arm
2. Fill shovel **Y068,** Empty shovel **Y069**
3. Retraction **Y023,** extension **Y024** of telescopic arm
4. Locking **Y016,** unlocking **Y017**
5. Solenoid valve for quickhitch lock **Y025**

Upper/lower rear additional control circuit

1. Raising **Y044** or lowering **Y045** tipper or raising **Y044** or lowering **Y045** auto hitch
2. Auto hitch tipper switch-over **Y046**

- Unlock auto hitch **Y047**

2.11 Control of monitoring for diesel engine

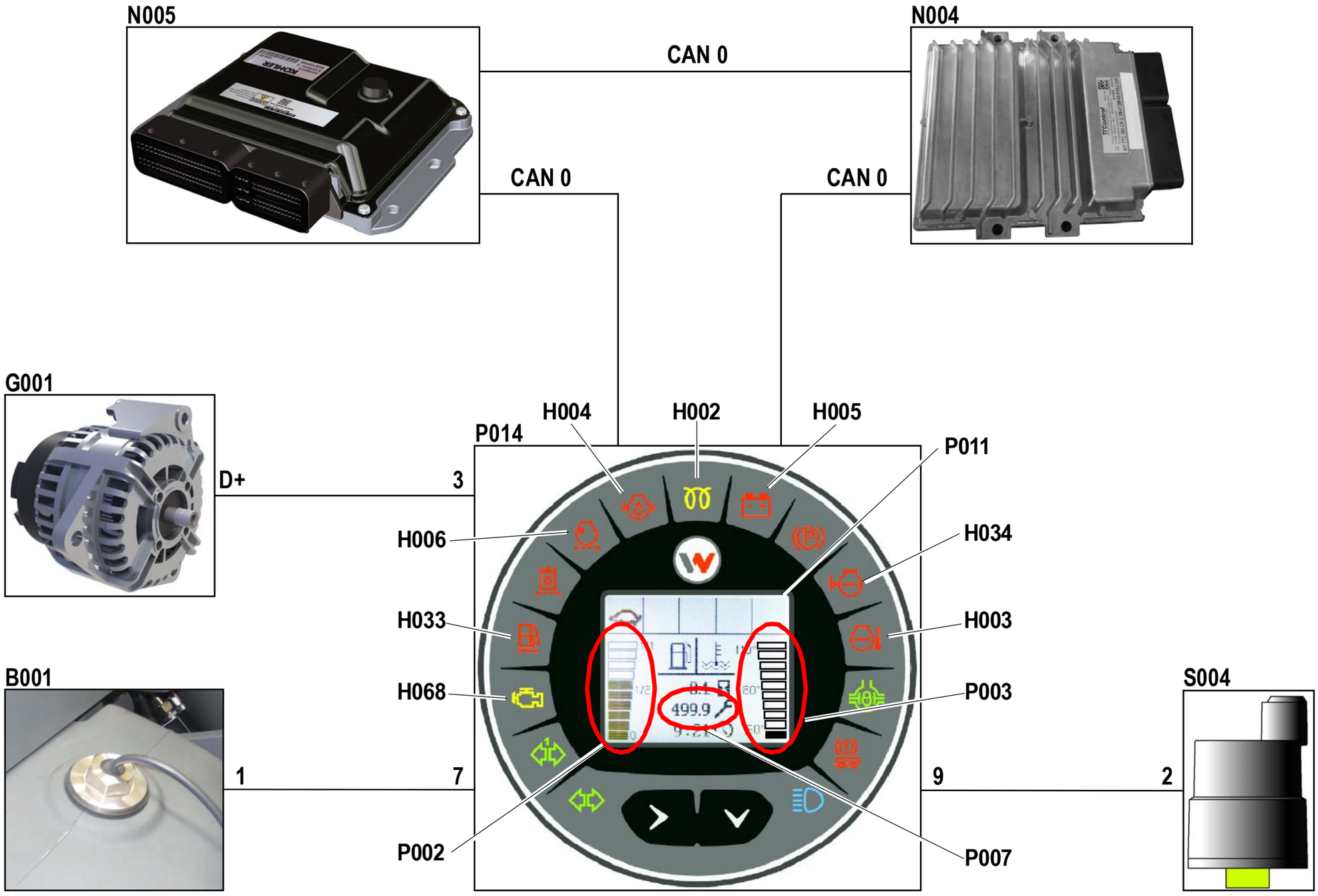

Diesel engine monitoring

Pos.	Component	Remarks
B001	Fuel indicator	–
G001	Alternator	12 V / 80 A
H002	Preheating indicator light	–
H003	Diesel engine temperature indicator light	–
H004	Engine oil pressure indicator light	–
H005	Alternator charge function indicator light	–
H006	Air filter indicator light	–
H033	Water separator indicator light	–
H034	Coolant level indicator light	–
H068	Error indicator light	–
N004	Controller	HY-TTC 580-CP
N005	Diesel engine electronics	Kohler
P002	Fuel level indication	–
P003	Diesel engine temperature indicator	–
P007	Diesel engine speed	–
P011	Indicating instrument (display) for additional machine information	–
P014	Indicating instrument	Bauser
S004	Pressure switch, air filter	–

Pos.	Component	Measured value	Remarks
S004	Pressure switch, air filter	54 mbar (0.8 psi)	–

Function description

Diesel engine monitoring

If malfunctions occur in the diesel engine, a message is sent via CAN BUS to indicating instrument **P014** by control unit **N005**.

The individual errors are displayed in indicating instrument **P014** by means of an error code and a warning buzzer.

Diesel engine speed display P007

The diesel engine speed is sent via CAN BUS from control unit **N005** to indicating instrument **P014**. The engine speed is shown in display **P007**.

Temperature display for diesel engine P003

The engine temperature is sent via CAN BUS from control unit **N005** to indicating instrument **P014**. The engine temperature is shown in display **P003**.

Tank sensor B001

PIN	Connection	to PIN	Measuring range
1	Display instrument P014	XA01 (7)	3 – 180.50 Ohm
2	Frame earth connection		

3 Cooling

3.1 Cooling control

Visco fan

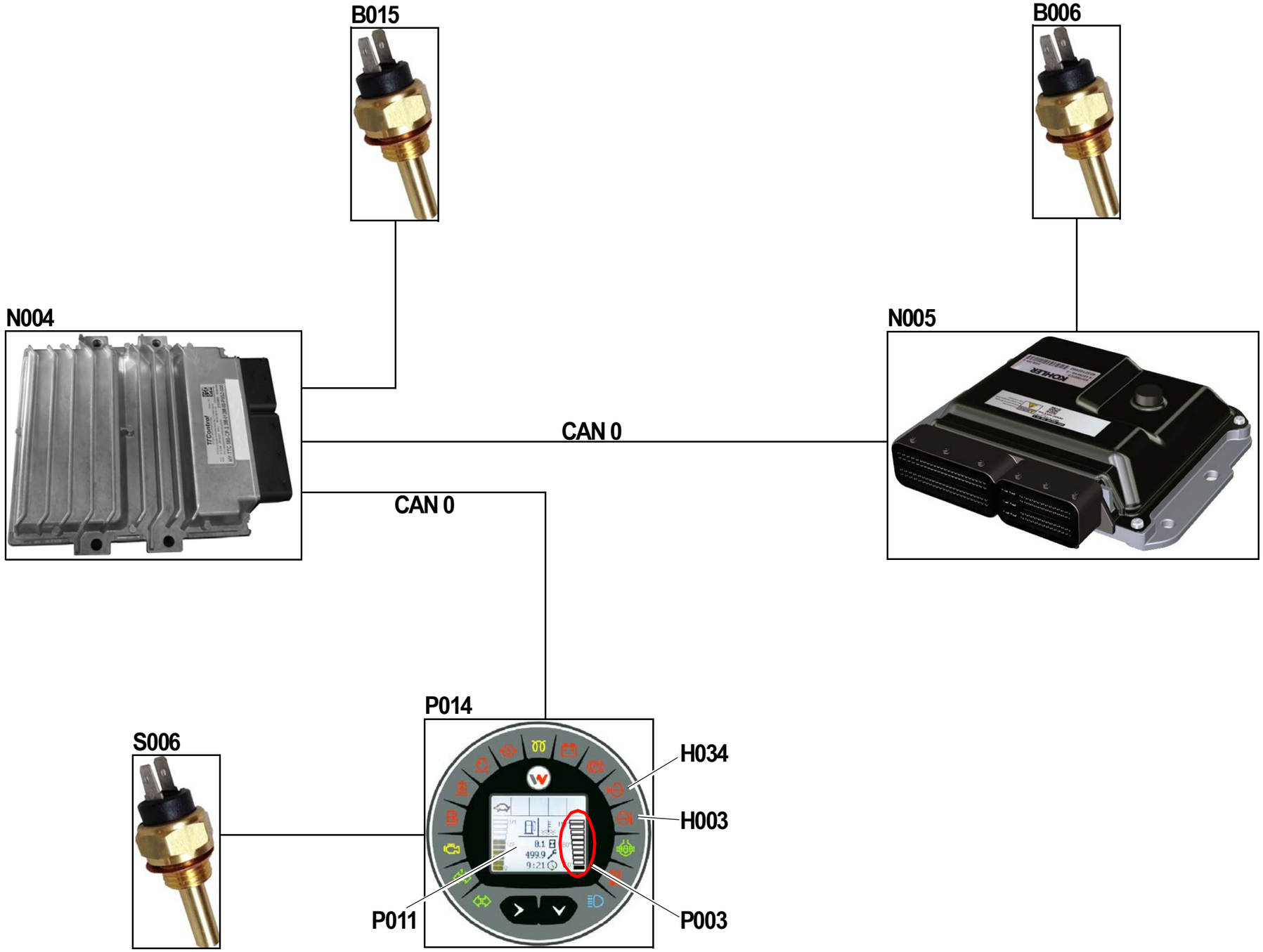

Reversing fan

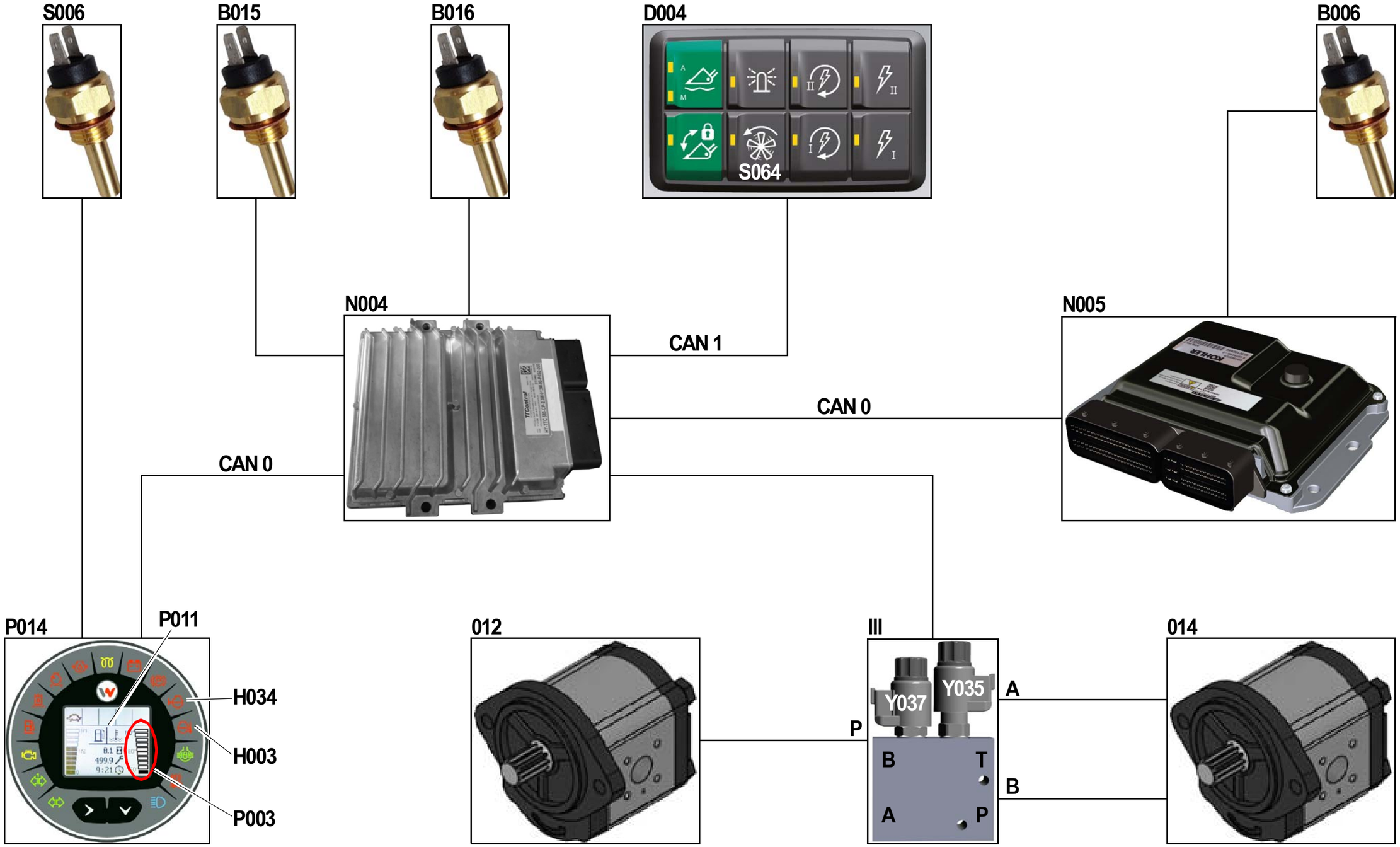

Cooling Visco fan

Pos.	Component	Remarks
B006	Engine temperature sensor	Coolant
B015	Coolant level sensor	–
H003	Engine temperature indicator light	–
H034	Coolant level indicator light	–
N004	Controller	HY-TTC 580-CP
N005	Diesel engine electronics	Kohler
P003	Diesel engine temperature indicator	–
P011	Display	–
P014	Indicating instrument	Bauser
S006	Temperature switch, hydraulic oil	–

Cooling reversing fan

Hydraulic components

Pos.	Component	Remarks
III	Reversing valve	–
012	Gear pump (power take-off)	11 ccm/U (0.67 in^3)
014	Fan motor (reversing fan)	11 ccm/U (0.67 in^3)

Electrical components

B006	Engine temperature sensor	Coolant
B015	Coolant level sensor	Coolant
B016	Fan control temperature sensor	–
D004	Keypad	CAN 1
H003	Engine temperature indicator light	–
H034	Coolant level indicator light	–
N004	Controller	HY-TTC 580-CP
N005	Diesel engine electronics	Kohler
P003	Diesel engine temperature indicator	–
P011	Display	–
P014	Indicating instrument	Bauser
S006	Temperature switch, hydraulic oil	–
S064	Reversing fan tip switch	–
Y035	Fan solenoid valve	PWM
Y037	Reversing fan solenoid valve	12 V

Table of measure values

Pos.	Component	Measuring range	Remarks
014	Fan motor (reversing fan)	max. fan speed 2600–2700 rpm	11 ccm/U (0.67 in^3)
III	Reversing valve	–	–
Y035	Fan solenoid valve	8 Ω	PWM
Y037	Reversing fan solenoid valve	8 Ω	12 V

Reversing fan

Functional description - reversing mode

When push button **S064** is pressed, the fan motor **014** is reduced to minimum speed.

The solenoid valve**Y037** is energised and the rotational direction of fan motor **014** is switched over i.e. fan motor **014** goes into cleaning mode at full speed.

After approx. 30 – 40 s, solenoid valve **Y037** is de-energised and the rotational direction of fan motor **014** is switched over to the radiator.

The controller **N004** regulates the speed and controls the solenoid valve **Y035** (proportional valve) of the fan motor **014** in a temperature dependent manner.

Whether reversing mode is operational can be identified from the noise level of fan motor **014** and/or the dust exiting the air intake grille of the engine cover.

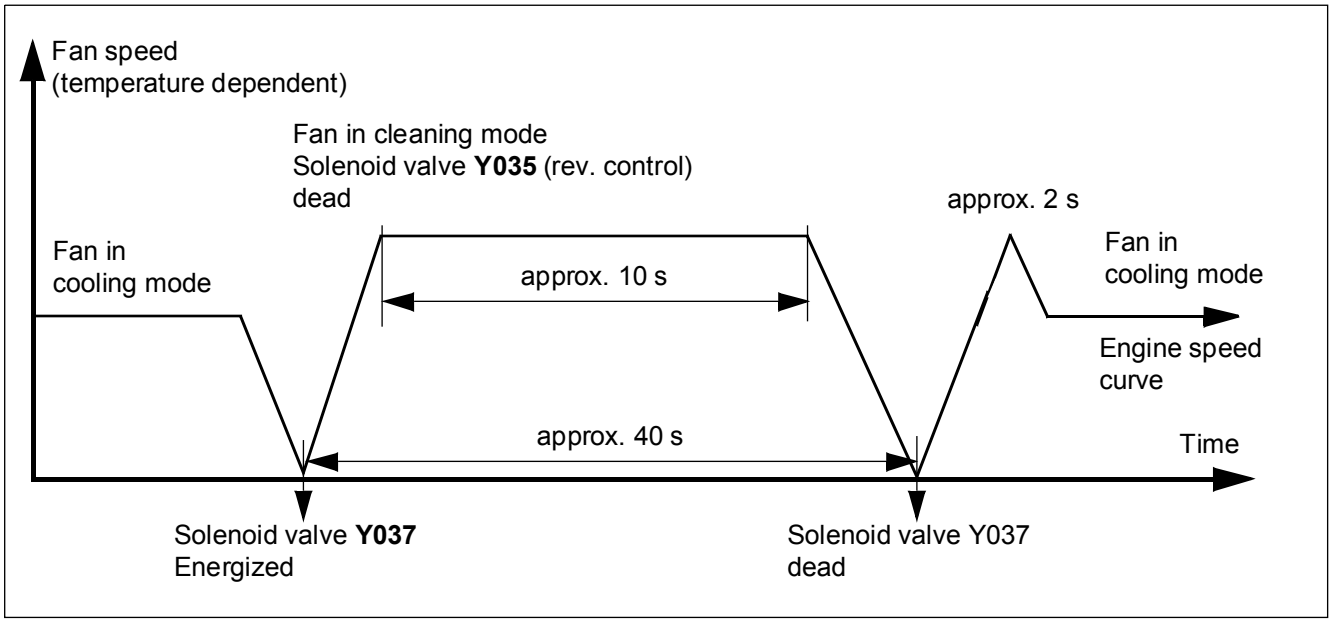

Temperature sensor of engine B006

PIN	Connection	to PIN	Remarks
1	Output to the engine control unit **N005**	XM01 (39)	Signal
2	Output to the engine control unit **N005**	XM01 (7)	Signal

Component	Temperature	Measuring range (Ω)	Tolerance (Ω)
Temperature sensor **B006**	40 °C (104 °F) 60°C (140°F) 80°C (176°F) 100°C (212°F) 120°C (248°F)	287,40 134,00 69,10 38,50 22,70	+/- 32,80 +/- 13,50 +/- 6,50 +/- 3,00 +/- 2,20

Component	Tightening torque
Temperature sensor **B006**	20 Nm (14.75 ft.lb)

Coolant level sensor B015

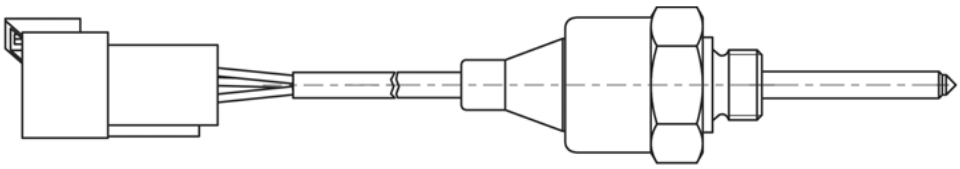

PIN	Connection	to PIN	Remarks
A	Power supply F013/5A	B015 (A)	12 V
B	Ground point cowl	B015 (B)	Ground
C	Input to the controller **N004**	XE15 (1 – 48)	Signal

Component	Tightening torque
Coolant level sensor **B015**	25 Nm (18.44 ft.lb)

Fan control temperature sensor B016

PIN	Connection	to PIN	Remarks
1	Input to the controller N004	XE015 (1 – 27)	Via resistor R037 100 Ω
2	Output from the controller N004	XE04 (2 – 43)	Ground

Component	Temperature	Measuring range (Ω)	Tolerance (Ω)
Temperature sensor **B016**	40 °C (104 °F) 60°C (140°F) 80°C (176°F) 100°C (212°F) 120°C (248°F)	287,40 134,00 69,10 38,50 22,70	+/- 32,80 +/- 13,50 +/- 6,50 +/- 3,00 +/- 2,20

Component	Tightening torque
Temperature sensor **B016**	20 Nm (14.75 ft.lb)

Function description

The fan speed is determined by the temperature of the hydraulic oil in the hydraulic oil radiator input and from the diesel engine temperature, which comes via the CAN-Bus

Hydraulic oil temperature switch (S006)

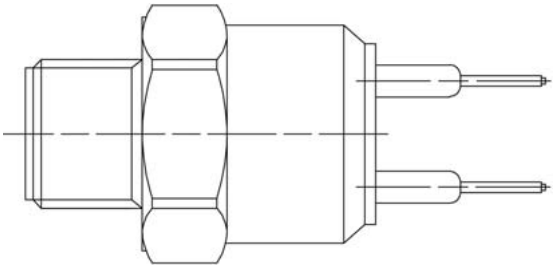

PIN	Connection	to PIN	Remarks
1	Input to the display instrument P014	XA01 (17)	5 V
2	Ground point cowl	XR01 (33)	Ground

Component	Switch operating point °C (°F)	Remarks
Hydraulic oil temperature switch **S006**	105 – 110 (221 – 230)	Normally closed contact

Component	Tightening torque
Hydraulic oil temperature switch **S006**	32 Nm (23.60 ft.lb)

Fan reversal touch button S064

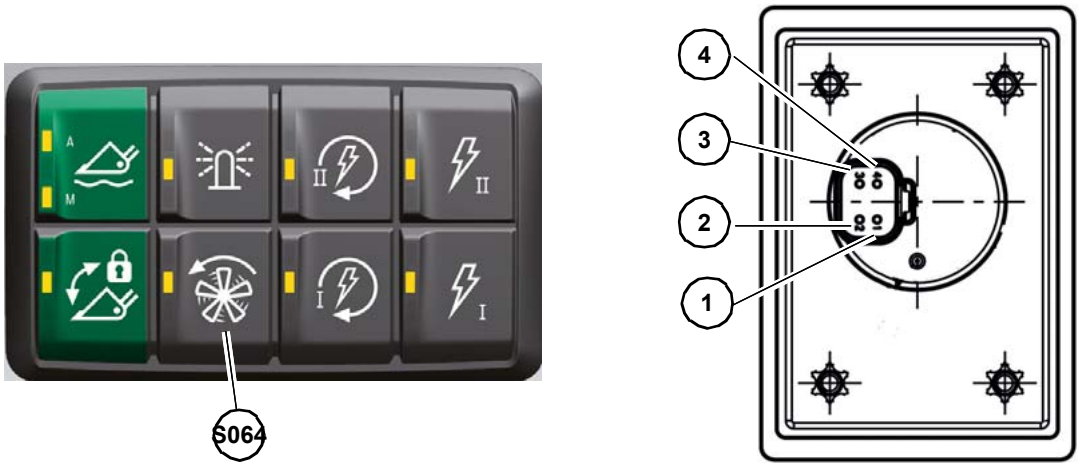

PIN	Connection	Measuring range
1	Voltage supply F032/5A	12 V
2	Ground	Cabin
3	CAN 1	high
4	CAN 1	low

Function description

With the touch button **S064** in the keypad **D004,** the reversing fan function is activated. If the function is active, the touch button **S064** lights up.

Reversing fan active

With the touch button **S064** on the keypad **D004** a CAN message (CAN1) is sent to controller **N004**. From the controller **N004**, the solenoid valve **Y037** is controlled with a PWM signal.

The PIN 1-63 outlet on the controller **N004**is activated, and the solenoid valve **Y037** (2) is energized according to a given curve.

Reversing valve III

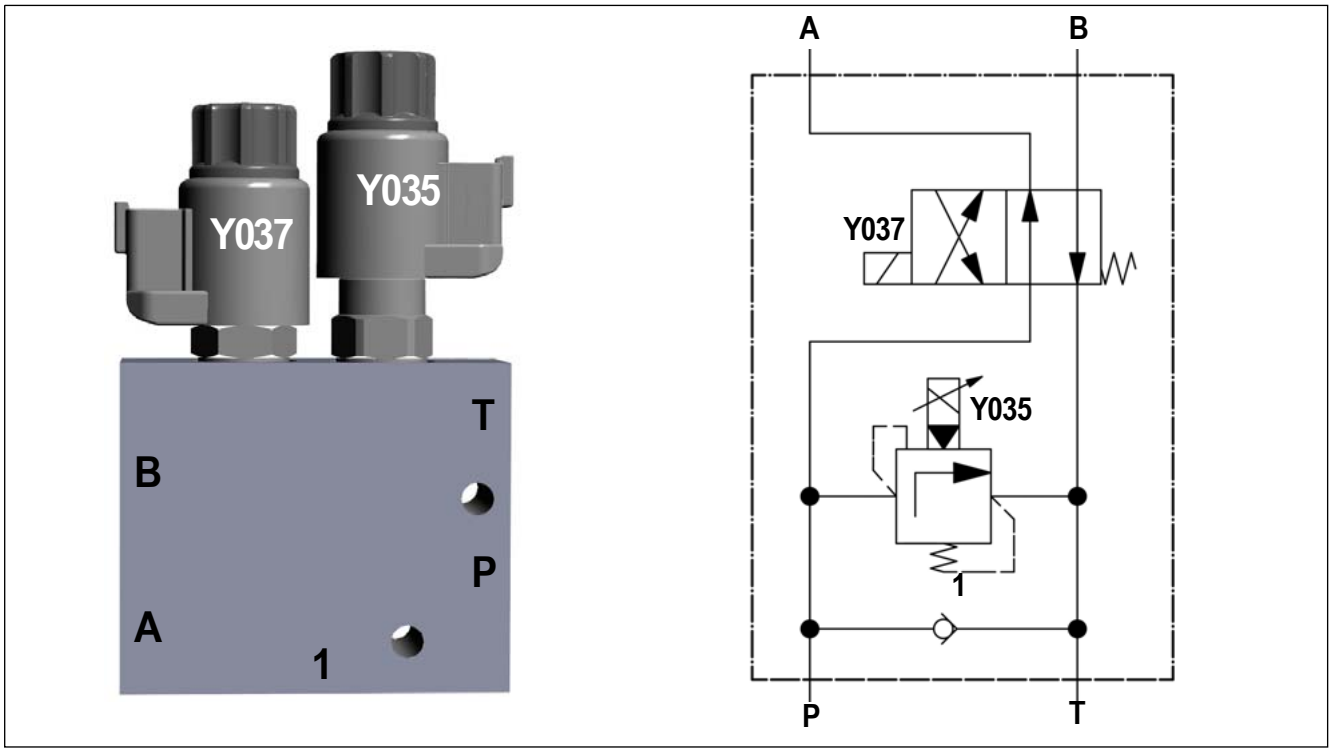

Connection	Power supply
A	Output to fan motor **014**
B	Input from fan motor **014**
P	Input from fan pump **012**
T	Output to reflux manifold block**017**

Pos.	Component	Measuring range
1	Non-return valve	–
Y035	Fan solenoid valve	8 Ω
Y037	Reversing fan solenoid valve	8 Ω

Function description

If the solenoid valve **Y035** (proportional valve) is de-energized, the oil flow is conveyed directly to the fan motor **014** and the fan motor **014** turns at maximum speed. Oil is fed via the non-return valve **1**.

e.g. when the diesel engine is stopped and the fan motor **014** comes to a stop, oil is replenished via the non-return valve **1**.

With an increasing current, the proportional valve **Y035** opens against the tank line, and the fan motor **014** turns more slowly.

With the touch button **S064** on the keypad **D004**, the solenoid valve**Y037**is energized by the controller **N004** according to a given curve.

Gear pump (auxiliary drive) 012

Component	Remarks
012	11ccm/U (0.67 in^3)

Function description

The gear pump (auxiliary drive) **012** is responsible for the oil supply of the hydraulic trailer brake and fan motor.

Fan motor 014

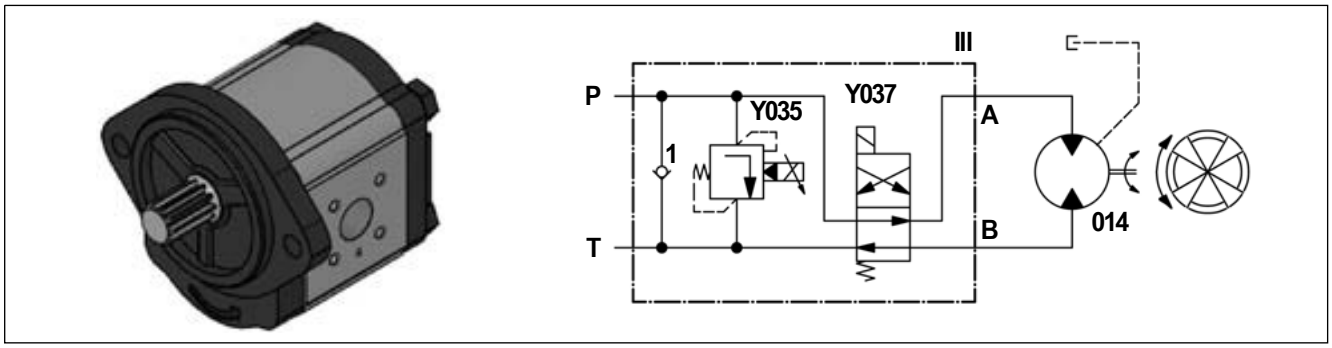

Component	Remarks
III	Reversing valve
014	11ccm/U (0.67 in^3)

Connection	Power supply
A	Output to fan motor **014**
B	Input from fan motor **014**
P	Input from fan pump **012**
T	Output to reflux manifold block **017**

Pos.	Component	Measuring range
1	Non-return valve	–
Y035	Fan solenoid valve	8 Ω
Y037	Reversing fan solenoid valve	8 Ω

Function description

The fan motor **014** is controlled via reversing valve **III**. In normal cooling mode the oil flow coming from port **P** flows to port **A**. From connection **A** the oil flow passes via fan motor **014** to connection **B** and is then conveyed into the hydraulic oil tank via connection **T** and the reflux manifold block **017**.

In reversing mode, the oil flow coming from connection **P** flows to connection **B**. From connection **B** the oil flow passes via fan motor **014** to connection **A** and is then conveyed into the hydraulic oil tank via connection **T** and the reflux manifold block**017**.

4 Power train

4.1 Assemblies

Drive system

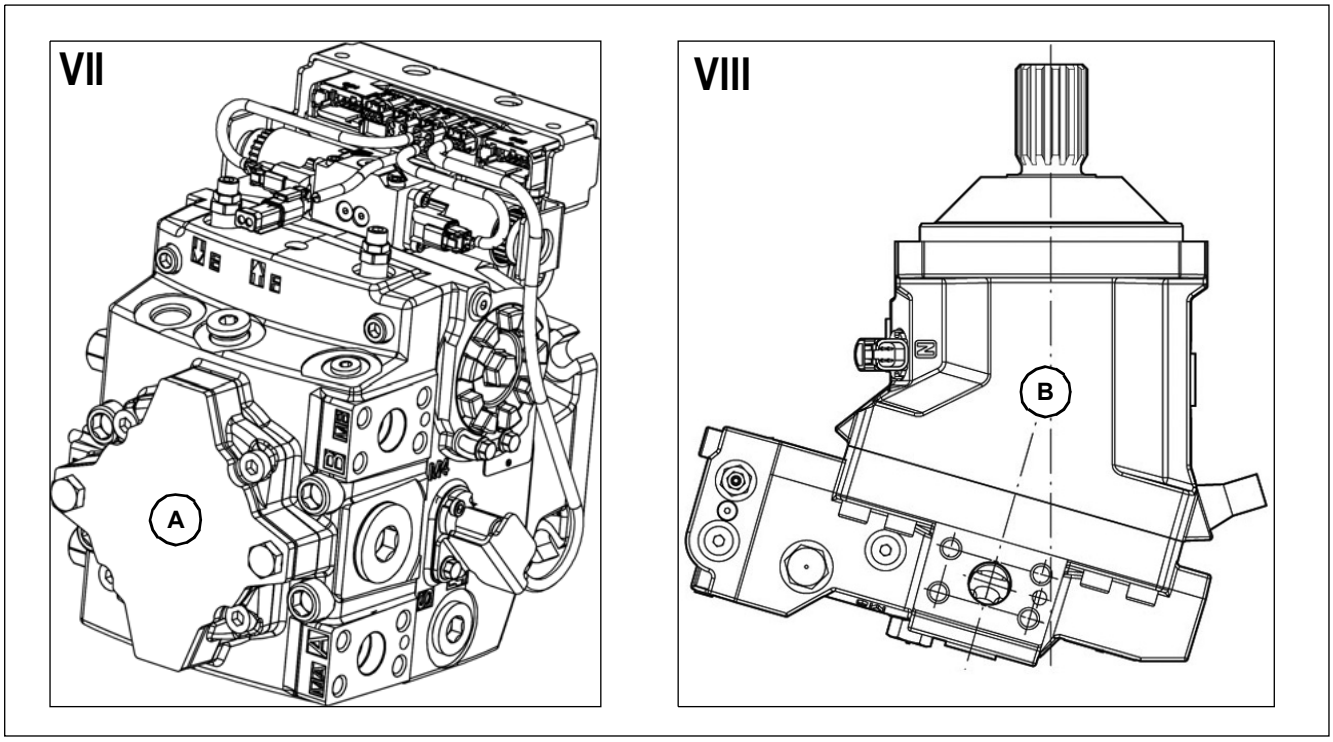

Pos.	Component	Remarks
A	Hydraulic pump **VII**	H1P 045
B	Hydraulic motor **VIII**	H1P 110

Hydraulic pump VII (H1P045)

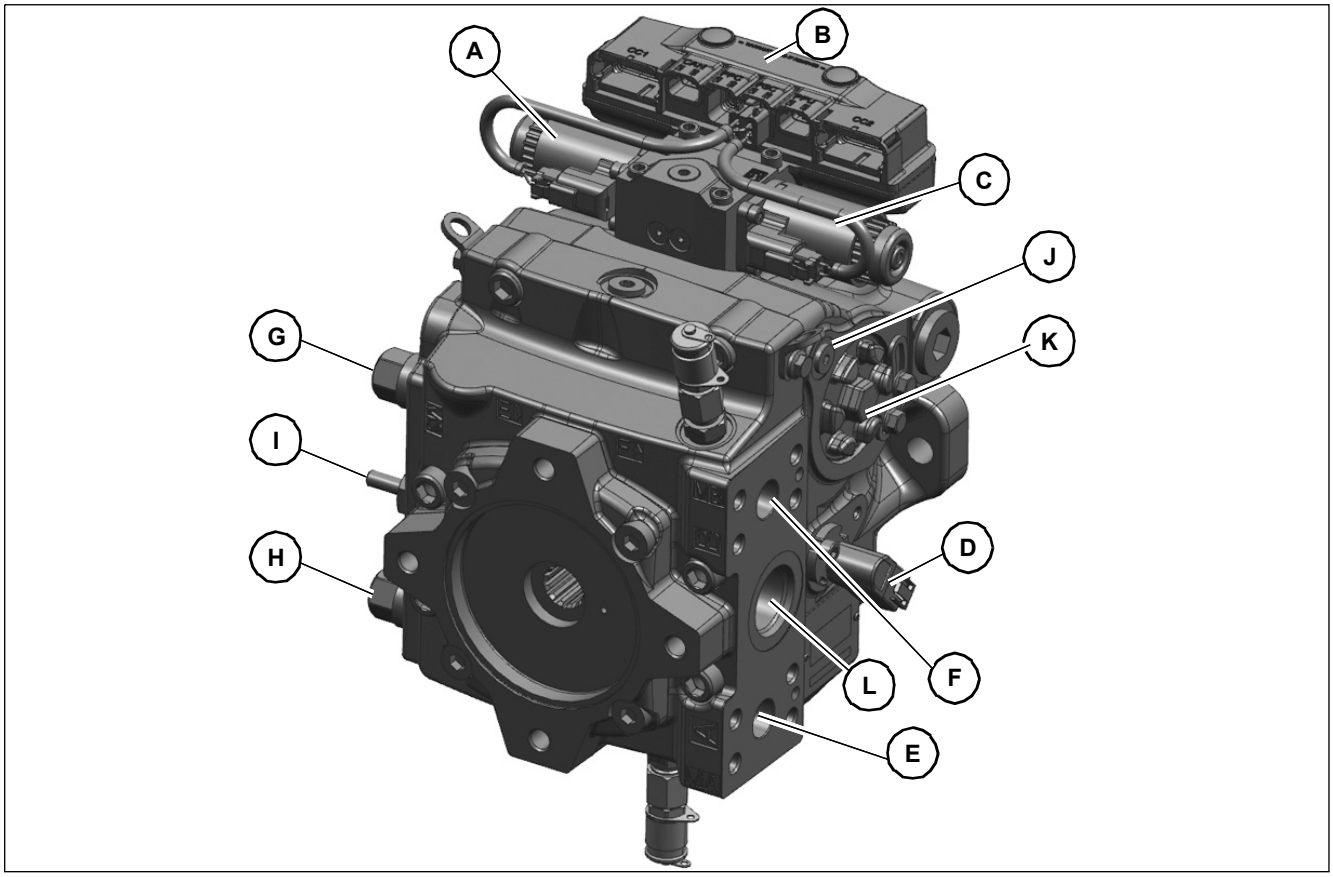

Pos.	Electrical component
A	Proportional valve **Y004** reverse driving direction
B	Traction electronics **N001**
C	Proportional valve **Y005** forward driving direction
D	Speed sensor of diesel engine **B010** (5 V)

Pos.	Hydraulic component
E	High-pressure port A
F	High-pressure connection B
G	High-pressure valve **040**
H	High-pressure valve **041**
I	Boost pressure valve **037**
J	Servo cylinder connection
K	Mechanical zero position
L	Leak oil

Functional description - variable displacement pump VII

The variable displacement pump **VII** is a variable displacement pump H1P in swashplate design for a closed hydraulic circuit. The TB ram swings the gear unit **035** via a swashplate.

As long as gear unit **035** is in the zero position, there is no volume flow. If the angle (zero position) is changed at gear unit **035**, the pistons in gear unit **035** move, thus creating a volume flow. The greater the angle of gear unit **035, the greater the volume flow, i.e.** more litres are pumped. The smaller the angle, the smaller the volume flow.

If the gear unit **035** is swung through the zero position, the flow direction changes (forwards/backwards).

The variable displacement pump VII has an integrated filling pump (boost pump) 001 for filling the closed hydraulic circuit. The boost pressure is limited via the boost pressure valve **037** on the variable displacement pump **VII**.

The adjustment is controlled by the traction electronics N001 via proportional valves **Y004**/**Y005.** Traction electronics **N001** is set up directly on the variable displacement pump **VII**.

The volume flow is protected via the multifunctional valves **040**/**041**.

The multifunctional valves **040**/**041** undertake 3 functions:

1. Securing the closed circuit against high pressure
2. Feeding boost pressure into the closed circuit

Bypass function for opening the closed circuit (tow function)

Variable displacement motor VIII

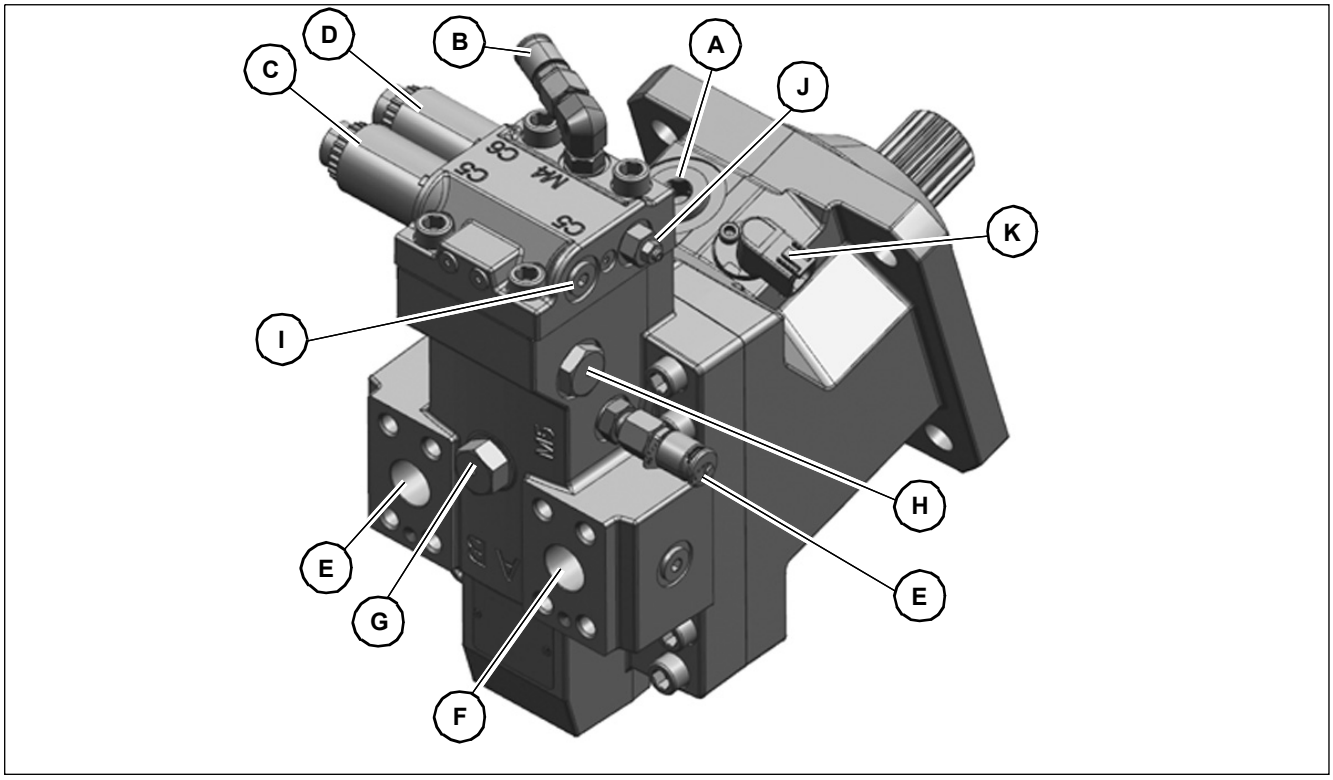

Pos.	Component
A	Leakage oil line (to oil cooler L1)
B	Test port M4 (for control piston M4)
C	Solenoid valve for driving direction identification **Y010** (energised in reverse direction by traction electronics **N001**)
D	Proportional valve **Y002** (capacity)
E	High-pressure port **B**
F	High-pressure port **A**
G	Flush valve **060**
H	Scouring slide valve **059**
I	Forward-reverse spool valve **045**
J	Adjusting screw (control initiation for control piston M4)
K	Speed sensor **B009** (5 V)
L	Test port M5 (driving direction identification)

Function description of variable displacement motor VIII

The variable displacement motor **VIII** is a bent axis engine with 110 ccm (6.7 in^3) and a service pressure of 450–480 bar (5801.5 – 6961.8 psi). A speed sensor is installed for control purposes. The proportional valve **Y002** is responsible for adjusting the hydraulic control. The pressure regulator **100** is opened by the proportional valve **Y002 .** This means that when proportional valve **Y002** is energised, the control piston **M4** is guided towards tank **XX** and the variable displacement motor **VIII** swivels to the large angle (high traction) - Turtle mode. You can switch between the speed ranges (Turtle/Hare) with the 1st/2nd speed switch **S021**. This means that the energisation of proportional valve **Y002** decreases according to a characteristic curve, depending on the diesel engine speed. Control is handled by the traction electronics **N001**.

The solenoid valve for driving direction identification **Y010** is responsible for the assignment of the high-pressure sides to the pressure regulator **100**.

In order to obtain a greater quantity of leak oil, a scouring slide **059** with flush valve **060** is installed. The scouring slide **059** is connected to the high-pressure circuit. When the scouring slide opens **059** a certain quantity is removed from the high-pressure circuit via the flush valve **060** and fed into the cooling system.

4.2 Checking and making adjustments

Preparations

Information

There might be differences between the pictures of the vehicle and the vehicle itself.

1. Park the machine on firm and level ground
2. Safely jack up the machine at the front and rear
3. Connect diagnosis tool
   ➥ **Click on help button** in order to open information on operation help files from KADIAS.
4. Run the vehicle to warm it up to 40°C – 60°C (104°F–140°F) hydraulic oil temperature

Troubleshooting work on drive

- If the vehicle no longer drives, or if the driving characteristics no longer comply with the series standard, troubleshooting is necessary.
- Describe the current state in the test report before starting trouble-shooting. When taking measurements, please follow order given in the test report. Measured values have to be entered in the test report. In order to ensure that the drive functions optimally after troubleshooting, the test procedure has to be repeated in accordance with the test report after each repair.

Required tools and screw connections

- Standard tools
- Pit
- 2 x 60 bar (900 psi) pressure gauge
- 2 x 600 bar (9000 psi) pressure gauge
- 1 x 250 bar (4000 psi) pressure gauge
- 2 x micro screw connection DN 20 25S (high pressure up to 600 bar (9000 psi))
- 2 x sealing plugs DN20 25S (high pressure up to 600 bar (9000 psi))
- 2 x mini screw connection DN25 30S (high pressure up to 600 bar (9000 psi))
- 2 x sealing plugs DN25 30S (high pressure up to 600 bar (9000 psi))
- 1 x Multimeter
- Diagnosis tool
- Set of Allen keys with ball coupling (attachment function)

Test connections: drive variable displacement motor VIII

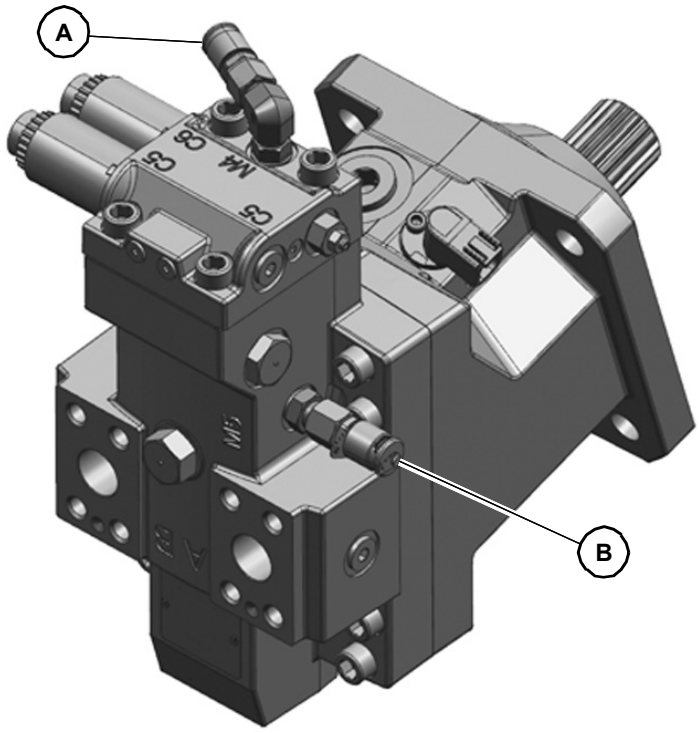

Pos.	Component	Remarks
A	Test port M4 (for control piston M4)	Pressure for large angle
B	Test port M5 (driving direction identification)	Assignment to the pressure regulator

Test connections: drive variable displacement motor VII

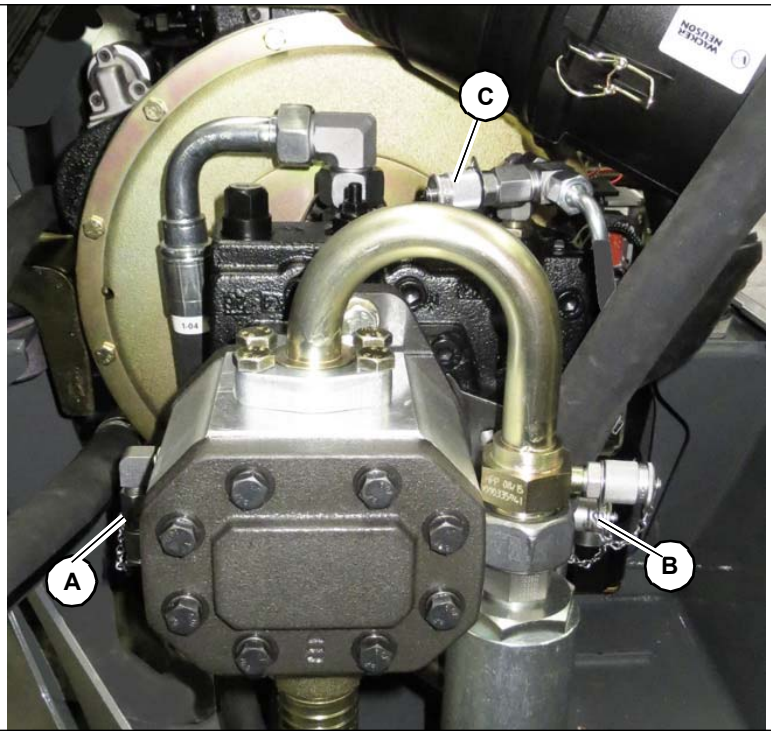

Pos.	Component	Remarks
A	Reverse test connection	High-pressure side MaA
B	Forward test connection	High-pressure side MaB
C	Boost-pressure test connection	-

Test protocol model 418-02 (20 km/h (12.4 mph))

Serial no.	Serial no. Variable displacement pump	Manufacture no. Hydraulic motor	Operating hours

Hydraulic oil temperature 40°C – 60°C (104°F – 140°F)

Page	Test features	Note	Specified value	Measured value
4-11	Min. idling speed	Diagnosis tool	940 – 960 min^{-1} (rpm)	
4-11	Max. idling speed	Diagnosis tool	2,550 – 2,650 min^{-1} (rpm)	
4-12	Boost pressure	Max. diesel engine speed	30–32 bar (435.10–464.10 psi)	
4-11	Starting speed	Forward/reverse	1,050– 1,150 min^{-1} (rpm)	
4-13	Travel direction identification	Max. diesel engine speed M5 test port	> 320 bar (4641.20 psi)	
4-14	High pressure	Max. diesel engine speed	460–490 bar (6671.74–7106.85 psi)	
4-15	Pump engine droop	**Max. diesel engine speed** **Turtle (Mode1)** at 300–350 bar (4351–5076 psi) High pressure	2,250 – 2,300 U/min (rpm)	
4-16	Engine droop Variable displacement motor	from 20 km/h (12.4 mph) Hare/All wheel steering deceleration to 10 + 2 km/h (6.2 + 1.2 mph)	2,350 – 2,420 U/min (rpm)	
4-17	**Cardan shaft speed** Version 20 km/h (12.4 mph) Hydraulic motor speed using diagnosis tool	**at 2350 rpm** **Diesel engine speed** **Hare/front axle steering (Mode 3)** 16" tyres 18" tyres 20" tyres	4,020–4,070 rpm 3,430–3,520 rpm 3,120–3,170 rpm	

Test protocol type 418-02 (30 km/h (18.6 mph))

Serial no.	Serial no. Variable displacement pump	Manufacture no. Hydraulic motor	Operating hours

Hydraulic oil temperature 40°C – 60°C (104°F – 140°F)

Page	Test features	Note	Specified value	Measured value
4-11	Min. idling speed	Diagnosis tool	940 – 960 min^{-1} (rpm)	
4-11	Max. idling speed	Diagnosis tool	2,550 – 2,650 min^{-1} (rpm)	
4-12	Boost pressure	Max. diesel engine speed	30–32 bar (435.10–464.10 psi)	
4-11	Starting speed	Forward/reverse	1,050– 1,150 min^{-1} (rpm)	
4-13	Travel direction identification	Max. diesel engine speed M5 test port	> 320 bar (4641.20 psi)	
4-14	High pressure	Max. diesel engine speed	460–490 bar (6,671.74–7,106.85 psi)	
4-15	Pump engine droop	**Max. diesel engine speed** **Turtle (Mode1)** at 300–350 bar (4,351–5,076 psi) High pressure	2,250 – 2,300 U/min (rpm)	
4-16	Engine droop Variable displacement motor	from 30 km/h (18.6 mph) Hare/All wheel steering deceleration to 15 + 2 km/h (9.3 + 1.2 mph)	2350 – 2420 U/min (rpm)	
4-17	**Cardan shaft speed** Version 30 km/h (18.6 mph) Hydraulic motor speed using diagnosis tool	**Max. diesel engine speed** **Hare/front-axle steering** 18 and 20 inch Reifen	4,700–4,750 rpm	

4.3 Adjustment work

Diesel engine speed: Checking

Test feature	Note	Rated value
Min. idling speed	Laptop	940–960 rpm
Max. idling speed	Laptop	2550–2650 rpm

Checking

1. Apply the parking brake.
2. Connect diagnosis tool and open drive setting (diesel engine speed) diagnosis page.

- Rated idle speed, bottom (idling speed).
- Rated idle speed, top (full throttle).

Information

The diesel engine speed cannot be changed using the diagnosis tool.

Starting speed: checking and adjusting

Test feature	Note	Rated value
Starting speed	Laptop	1,050–1,150 rpm

Checking and adjusting

1. Jack up the front and rear of the machine securely.
2. Connect diagnosis tool and open drive setting (starting speed) diagnosis page.
3. Follow the instructions in KADIAS.
   ➥ **Click on help button** in order to open information on operation help files from KADIAS.

Boost pressure: checking and adjusting

Test feature	Note	Rated value
Boost pressure	Max. diesel engine speed	30–32 bar (435.10–464.10 psi)

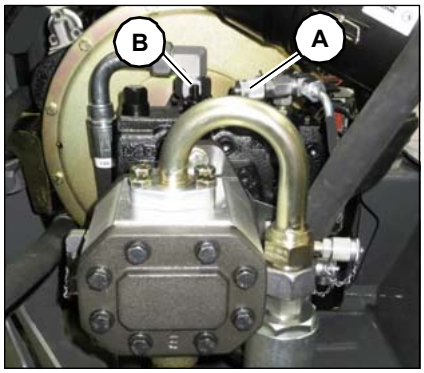

Checking

1. Apply the parking brake.
2. Connect sensor to test connection **A** for boost pressure .
3. Bring diesel engine up to full diesel engine speed.
4. Read off boost pressure at full diesel engine speed.

There is a pressure difference of approx. 4–7 bar (58–101.5 psi) between the lower and upper idling speed

Adjustment

Required tools

- Hexagon socket AF 4
- Ring wrench AF 13

1. Boost pressure too low
   ➥ Screw in boost pressure valve **B**
2. Boost pressure too high
   ➥ Unscrew boost pressure valve **B**

Driving direction identification: Checking

Test feature	Note	Remarks	Rated value
Travel direction identification	M5 test port	Diagnosis tool	> 320 bar (4641.20 psi)

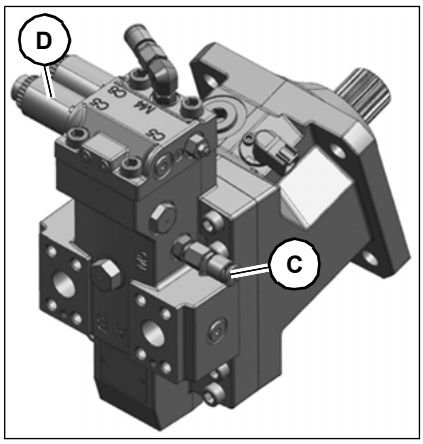

Checking

1. Connect diagnosis tool and open drive setting (direction detection) diagnosis page.
2. Connect sensor to test connection M5 **C**.
3. Connect sensor to test port for high pressure forwards **B** and reverse operation **A** .
4. Select forwards driving direction.
5. Activate brake and slowly raise diesel engine speed until high pressure is attained.
6. Read and note down pressure on measuring sensor for forwards and M5.

The same measurement needs to be carried out for the reverse direction

In the event of a considerable deviation between the high pressure and M5 then check the driving direction identification.

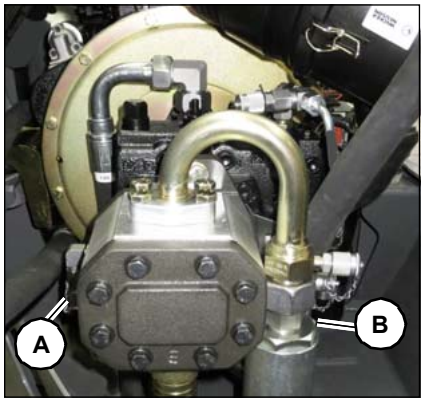

T**est connection for high pressure B** forwards

T**est connection for high pressure A** in reverse

Information

The direction detection **D Y010** is energized in reverse.

High pressure: check

Test feature	Note	Remarks	Rated value
High pressure	High-pressure test port	Diagnosis tool	460–490 bar (6671.74–7106.85 psi)

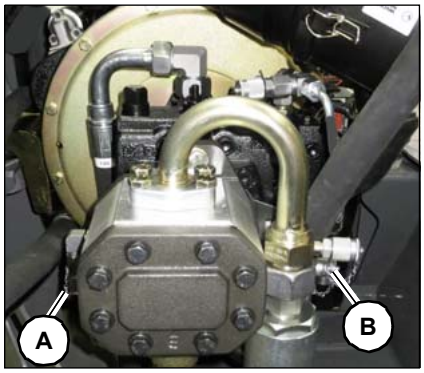

Checking

1. Connect diagnosis tool and open drive setting (high pressure) diagnosis page.
2. Connect sensor to test port for high pressure forwards **B** and reverse operation **A** .
3. Select forwards driving direction.
4. Activate brake and slowly raise diesel engine speed until high pressure is attained.
5. Read pressure off sensor for forwards direction **B** and note this down.

Information

During the measurement, the wheels may not spin. This could otherwise lead to distorted results.

➥ The high pressure has to be attained in all speed ranges

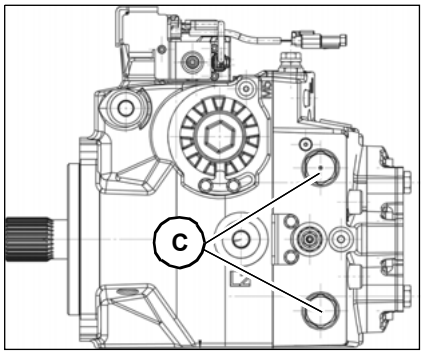

Information

High pressure valves **C** cannot be adjusted.

Engine droop, variable displacement pump VII: Checking / Adjustment

Test feature	Note	Remarks	Rated value
Engine droop Variable displacement pump	at 300–350 bar (4,351–5,076 psi) high pressure	Laptop	2,250–2,300 rpm

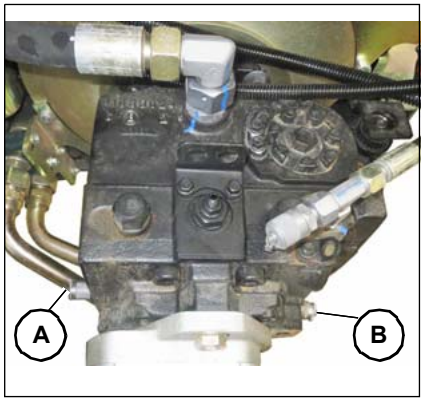

Checking

1. Connect diagnosis tool and open drive setting (pump suppression) diagnosis page.
2. Jack up the front and rear of the machine securely.
3. Connect sensor to test port fitting for high pressure forwards **B**
4. Select turtle (check diagnosis tool).
5. Select forwards driving direction.
6. Bring vehicle up to full speed.
7. Using the service brake, slow the vehicle forward to 300–350 bar (4351–5076 psi) high pressure (full throttle remains).
   ➥ Retain pressure.
8. Read off and note down diesel engine speed.

Adjustment

➥ Diesel engine speed is too low
   ➥ Reduce the pump flow with the diagnosis tool

➥ Diesel engine speed is too high
   ➥ Increase the pump flow with the diagnosis tool

Information

If the value from (motor lugging variable displacement pump) cannot be attained in turtle, then the current ratings have to be transferred for all speeds, forwards and reverse.

Engine droop, variable displacement motor VIII: Checking / Adjustment

Test feature	Note	Remarks	Rated value
20 km/h (12.4 mph) vehicle Engine droop Variable displacement motor	Decelerate max. diesel engine speed from 20 + 2 km/h (12.4 + 1.2 mph) to 10 + 2 km/h (6.2 + 1.2 mph)	Diagnosis tool	2350–2420 rpm
30 km/h (18.6 mph) vehicle Engine droop Variable displacement motor	Max. diesel engine speed decelerate from 30 + 2 km/h (18.6 + 1.2 mph) to 15 + 2 km/h (9.3 + 1.2 mph)	Diagnosis tool	2,350–2,420 rpm

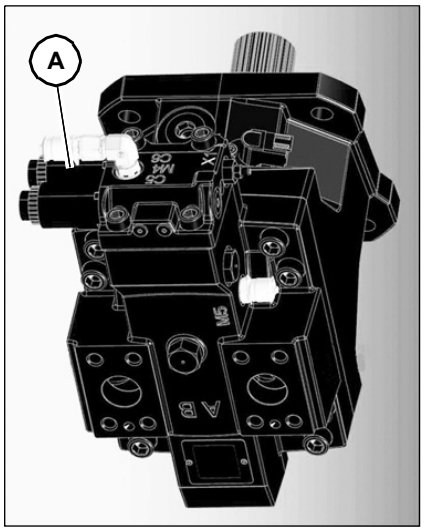

Checking

1. Connect diagnosis tool and open drive setting (engine curves) diagnosis page.
2. Jack up the front and rear of the machine securely.
3. Select hare / four-wheel steering (check with diagnosis tool).
4. Select forwards driving direction.
5. Bring vehicle up to full speed.
6. Using the service brake, decelerate vehicle from 30 + 2 km/h (18,6 + 1,2 mph) to 15 + 2 km/h (9,3 + 1,2 mph) (maintaining full throttle) and maintain speed.
7. Read off and note down diesel engine speed.
8. Carry out the same measurement for the reverse driving direction.

Adjustment

➥ Diesel engine speed is too high
  ➥ Reduce energisation of proportional valve **Y002 (A)**

➥ Diesel engine speed is too low
  ➥ Increase energisation of proportional valve **Y002 (A)**

Cardan shaft speed: Checking / Adjustment

Test feature	Note	Remarks	Rated value
Cardan shaft speed 20 kph version (12,4 mph) Hydraulic motor speed using diagnosis tool	**at 2,350 rpm** **Diesel engine speed** **Hare/front-axle steering** 16" tyres 18" tyres 20" tyres	Diagnosis tool	 4,020–4,070 rpm 3,430–3,520 rpm 3,120–3,170 rpm
Cardan shaft speed 30 kph version (18,6 mph) Hydraulic motor speed using diagnosis tool	**Max. diesel engine speed** **Hare/front-axle steering** 18 and 20 inch tyres	Diagnosis tool	4,700–4,750 rpm

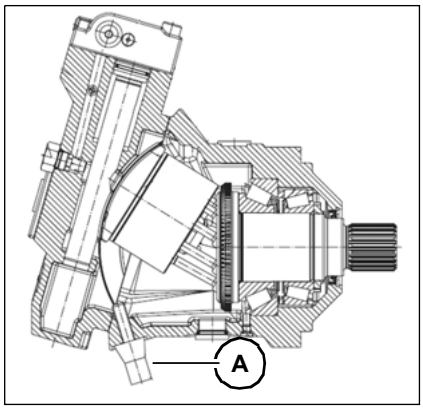

Checking

1. Connect the diagnosis tool and open the propeller shaft speed diagnosis page.
2. Jack up the front and rear of the machine securely.
3. Select hare / front drum steering.
4. Accelerate vehicle to full speed.
5. Record and note down the cardan shaft speed with the diagnosis tool.

Adjustment

➥ If cardan shaft revs are too high
  ➥ Screw setting screw **A in**

➥ If cardan shaft revs are too low
  ➥ Screw setting screw **A out**

4.4 Error descriptions

Boost pressure not attained

Error descriptions

The supply for the boost pressure is provided by the integrated boost pump **001**. The boost pressure is limited by the boost pressure valve **037** at the hydraulic pump **VII.** The boost pressure fills the closed circuit and is needed to regulate hydraulic pump **VII**.

The following items need to be checked

1. Oil supply of charge pump from suction return filter **026.**
2. Seal connection M3 on the hydraulic pump **VII in order to exclude external loads**.
3. Boost pressure valve **037**
4. Flush valve **060** and scouring slide **059**
5. High-pressure valves **040/041**

If the boost pressure is not attained after these test points

6. Tightly connect the high pressure lines to the drive pump **VII** .
   - ➥ **Boost pressure available:**
     error in variable displacement motor **VIII**
   - ➥ **Boost pressure not available:**
     error in hydraulic pump **VII**

High pressure not attained

The flow of oil is conveyed by the hydraulic pump **VII** to the high-speed gearbox **VIII**. The high pressure relief is provided via high-pressure valves **040**/**041** on the hydraulic pump **VII**.

The following items need to be checked

1. Read error memory.
2. Boost pressure available.
3. Check current feed supplied to proportional valves **Y004/Y005** at the drive pump **VII**
4. Swap high pressure valves **040**/**041** .
5. Measure the control piston pressure at the drive pump **VII** M4 and M5.
   - ➥ Connection thread for M4/M5 ISO 11926-1-7/16-20

If the high pressure is not attained after these test points

6. Tightly connect the high pressure lines to the drive pump **VII** .
   - ➥ **High pressure not available:**
     defect in hydraulic pump **VII**
   - ➥ **High pressure available:**
     continue troubleshooting for variable displacement motor **VIII**

Starting speed

Starting speed is understood as speed measured at the moment at which the vehicle starts to move. The starting speed depends on the diesel engine speed and the current supplied to the proportional valves **Y004**/ **Y005**.

The following items need to be checked

The vehicle starts to move in the selected driving direction and at a lower diesel engine speed (idling speed).

1. Read error memory.
2. Check lower diesel engine speed.
3. Change energisation of hydraulic pump **VII** via diagnosis tool.

Vehicle starts to move without a selected driving direction

1. Disconnect both proportional valves **Y004**/**Y005** .
   ➥ Vehicle continues to move
2. Check the control piston pressure M4 and M5 at the drive pump **VII**.
   ➥ Connection thread for M4/M5 ISO 11926-1-7/16-20
3. Check the mechanical zero position of the drive pump **VII**.

End speed is not attained

In order to attain the end speed, the hydraulic pump **VII** must deliver its full litre capacity. The variable displacement motor **VIII** has to be swivelled to the minimum capacity.

The following items need to be checked

1. Read error memory.
2. Check speed with diagnosis tool.
3. Check upper diesel engine speed.
4. Check diesel engine fuel system.
5. Check energisation of proportional valves **Y004**/**Y005**.
6. Check energisation of proportional valve **Y002**.
7. Check boost pressure.
8. Check inching potentiometer **R002**.
9. Check solenoid valve for driving direction identification **Y010**.
10. Check M5 restrictor on variable displacement motor **VIII**.
11. Check engine droop hydraulic pump **VII**
12. Check motor lugging, variable displacement motor **VIII**.
13. Check cardan shaft speed setting.
14. Check pressure regulator **100** on variable displacement motor **VIII**.

Hare mode is activated, but the drive only operates in turtle mode (7 km/h (4.3 mph))

For safety reasons the drive may switch to Turtle mode if an electrical error occurs.

The following items need to be checked

1. Check steering system synchronisation.
2. Read error memory.
➥ Electrical error is repaired
   ➥ Vehicle continues driving in Turtle mode
3. Check pressure regulator **100** on variable displacement motor **VIII**.
4. Check proportional valve **Y002** .

Drive has no output

With regard to output, a differentiation must be made as to whether this refers to the driving speed or the pushing power. Both factors are handled differently in troubleshooting.

No output (driving speed)

see Vehicle does not reach terminal velocity

No output (pushing power)

1. Read error memory.
2. Check upper diesel engine speed.
3. Check diesel engine fuel system.
4. Check high pressure
5. Check solenoid valve for driving direction identification **Y010**.
6. Check pressure regulator **100** on variable displacement motor **VIII**.
7. Check motor lugging variable displacement pump **VII**.
8. Motor lugging, variable displacement motor VIII.

Vehicle cannot drive forwards or backwards

This could be due to an electrical or mechanical error.

Electrical fault

1. Read out error memory

Mechanical error

1. Boost pressure available
2. Brake opened

Overview: Error descriptions for individual components

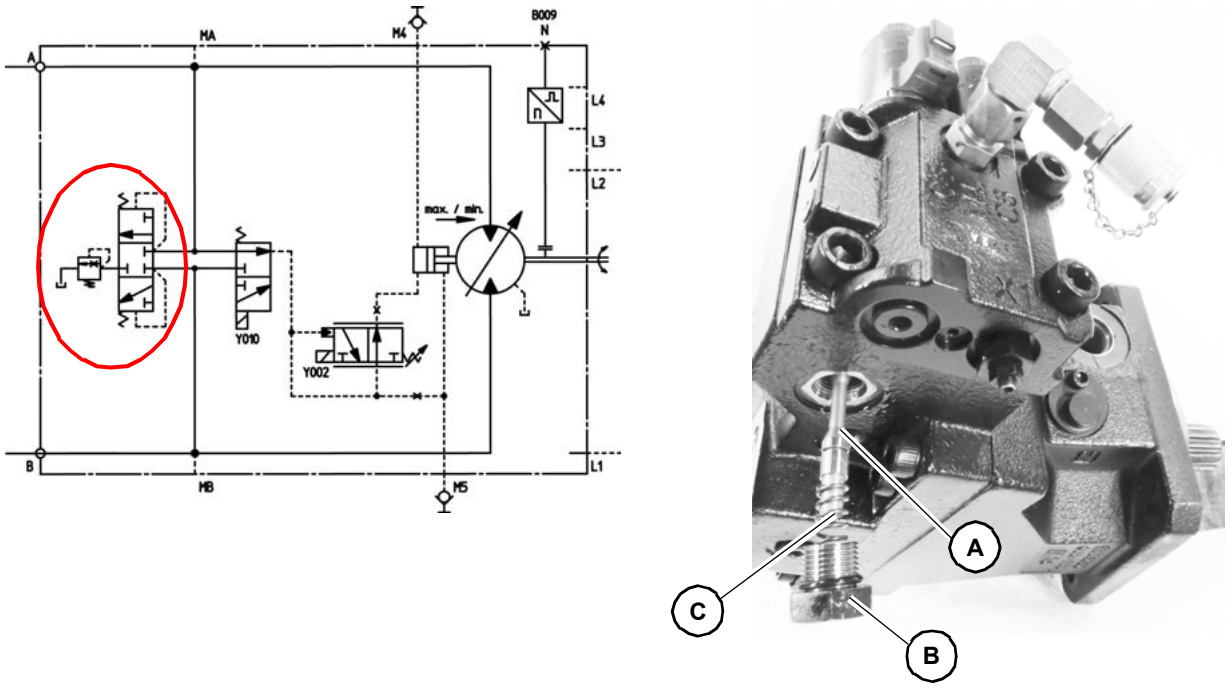

Check scouring slide 059

1. Check scouring slide **059 (A)** for easy movement and dirt.
2. Check spring **(C)**for damage.
   ➥ Screw plug **(B)** Torque setting 52 Nm (38.4 ft.lb).

Check forward-reverse spool valve 058

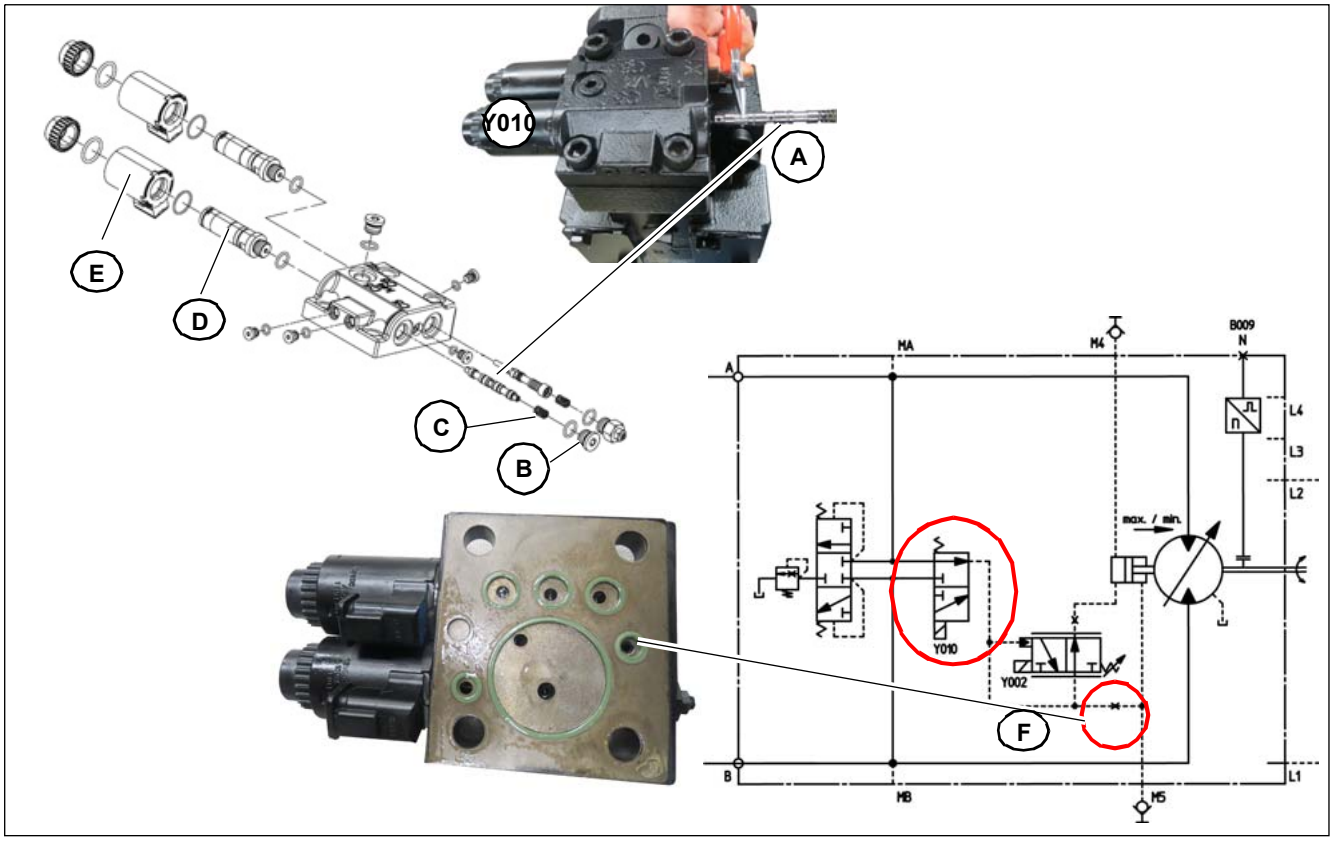

1. Solenoid valve for driving direction identification **Y010 (E)** energised in forward direction
2. Check forward-reverse spool valve **058** (A) for easy movement and dirt.
3. Check spring **(C)**for damage.
   - ➥ Screw plug **(B)** Torque setting 40 Nm (29.5 ft.lb)
   - ➥ Valve insert **(D)** Torque setting 25 Nm (18.4 ft.lb)

No high pressure n control piston M5 during forwards and reverse

Checking

1. Check energisation of solenoid valve **Y010 (E)**.
   - ➥ Solenoid valve for driving direction identification **Y010 (E)** energised in forward direction
2. Check ease of movement of forward-reverse spool valve **058 (B)**
   .
3. Check restrictor **E** for dirt.

Check pressure regulator 100

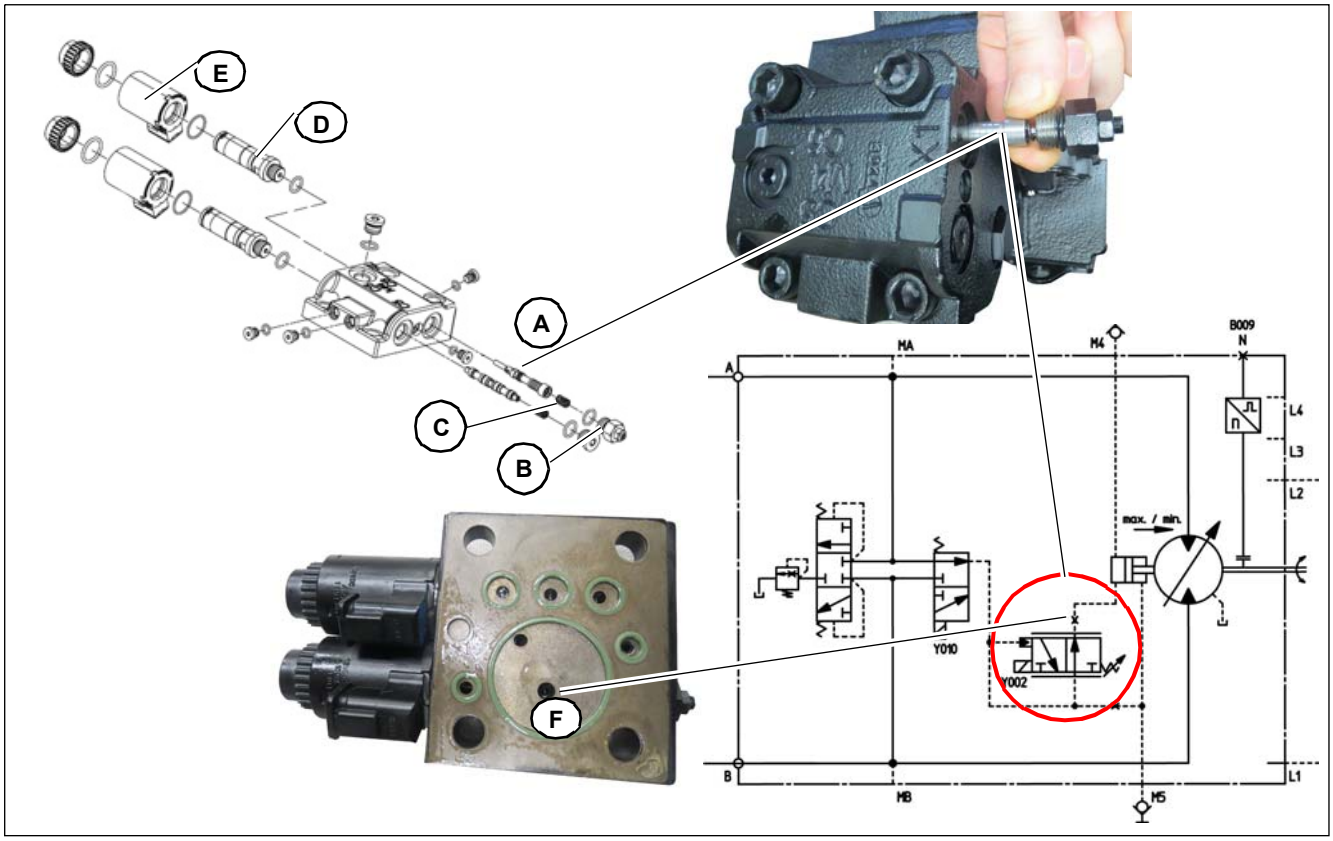

1. Check energisation of proportional valve **Y010** (E).
2. Check pressure regulator **100** (**A**) for smoothness and dirt.
3. Check spring (**C**) for damage.
   ➥ Adjusting screw (**B**) Torque setting 25 Nm (18.4 ft.lb)
   ➥ Valve insert (**D**) Torque setting 25 Nm (18.4 ft.lb)

No pressure in control piston M4 during forwards and reverse

Checking

1. Check driving direction allocation.
2. Check energisation of driving direction identification solenoid valve **Y010** (**E**).
3. Check pressure regulator **100** (**A**) for ease of movement
   ➥ Check orifice F has not accumulated dirt

4.5 Travelling drive control

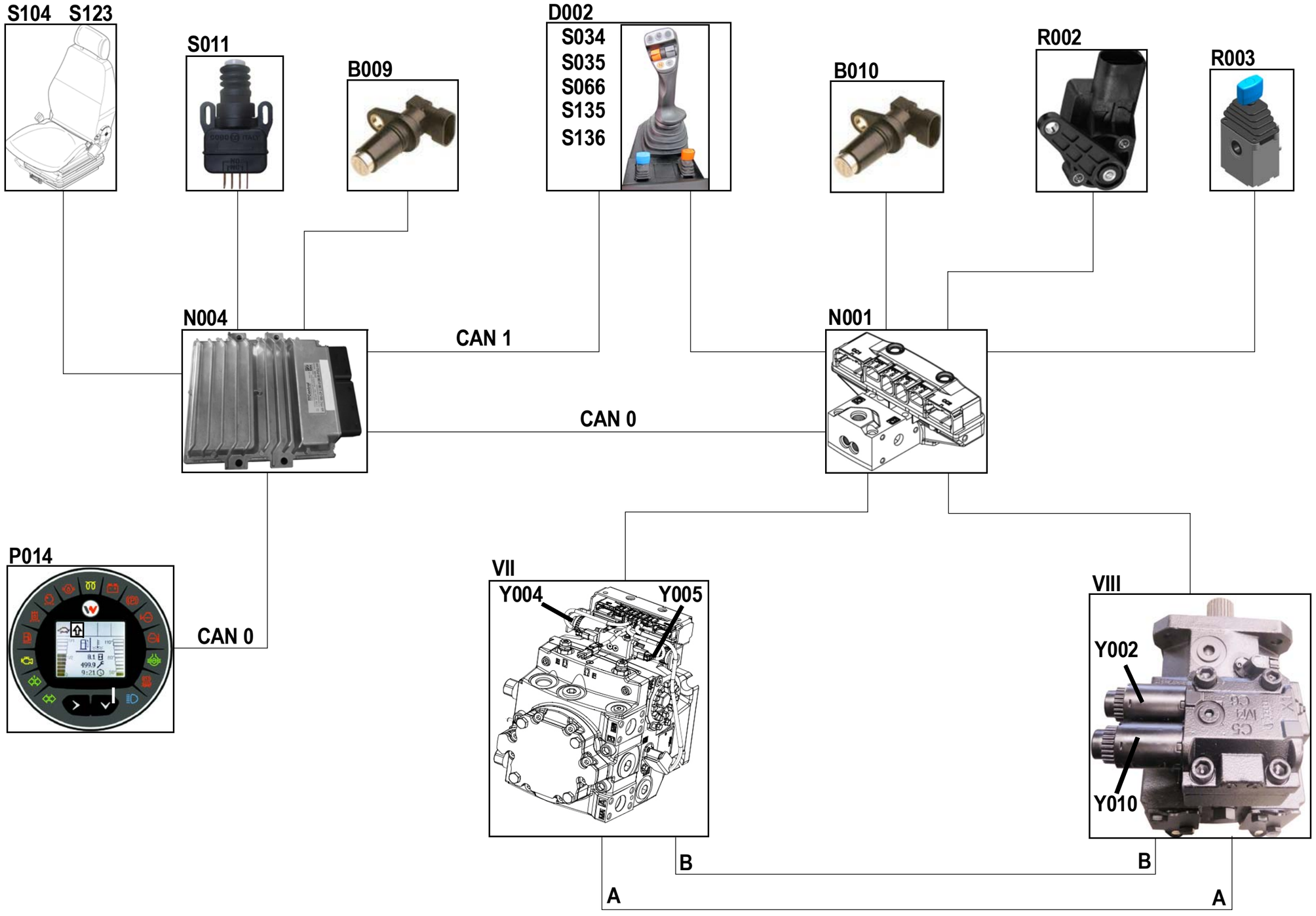

Description of drive system

Pos.	Component	Remarks
B009	Speed sensor	5 V
B010	Diesel engine speed sensor	–
D002	Joystick	CAN 1
N001	Drive electronics	CAN 0 / H1 AC control
N004	Controller N004	TTC 580
P011	Forward/reverse display	CAN 0
R002	Inching angle of rotation sensor	5 V
R003	Creep gear low-speed control	5 V
S011	Handbrake switch	–
S034	Forwards button (on joystick)	–
S035	Backwards button (on joystick)	–
S066	Neutral button (on joystick)	–
S104	Switch (operator presence switch)	–
S123	Seat belt contact switch	–
S135	Reduce speed button (on joystick)	–
S136	Increase speed button (on joystick)	–
S034	Forwards button (on joystick)	–
S035	Backwards button (on joystick)	–
Y002	Proportional valve speeds (Turtle/Hare)	4,50 Ω
Y004	Reverse proportional valve	3,66 Ω
Y005	Forward proportional valve	3,66 Ω
Y010	Travel direction identification solenoid valve	Reverse driving energised 3,7 – 4,5 Ω

Pos.	Component	Designation
VII	Travelling drive variable displacement pump	H1 P45
VIII	Variable displacement motor	H1B110

Pos.	Component	Designation
CAN1	CAN1 – Work hydraulics	–
CAN0	CAN0 – Drive	–

Forward travel

Variable displacement pump VII

Via the touch button **S034** (forward) on the joystick, a message is sent to the controller **N004.** This relays the signal to the traction electronics **N001** via a CAN message.

The traction electronics **N001** then outputs a PWM signal, so that proportional valve **Y005** can be controlled according to a characteristic curve. The boost pressure, which is present at proportional valve **Y005**, can then adjust the variable displacement pump **VII** depending on the diesel engine speed via variable displacement cylinder **050**.

Variable displacement motor VIII

The variable displacement motor **VIII** is at minimum capacity in its initial position, and a small torque is generated. The motor is adjusted to maximum capacity via the boost pressure in a closed circuit, after the machine starts. The proportional valve **Y002** is energised.

As the speed of the diesel engine increases, the proportional valve **Y002** on the variable displacement motor **VII** is controlled by the traction electronics **N001** according to a characteristic curve. The proportional valve **Y002** is de-energised and the regulation then occurs purely hydraulically. I.e. the variable displacement motor **VIII** is adjusted to a greater capacity via the high pressure, as the speed of the diesel engine decreases (e.g. on uphill gradients). The driving speed reduces proportionally to the increasing high pressure.

Reverse travel

Variable displacement pump VII

Via the touch button **S035** (reverse) on the joystick, a message is sent to the controller **N004.** This relays the signal to the traction electronics **N001** via a CAN message.

The traction electronics **N001** then outputs a PWM signal, so that proportional valve **Y004** can be controlled according to a characteristic curve. The boost pressure, which is present at proportional valve **Y004**, can then adjust the variable displacement pump **VII** depending on the diesel engine speed via variable displacement cylinder **050**.

Variable displacement motor VIII

The variable displacement motor **VIII** is at minimum capacity in its initial position, and a small torque is generated. The motor is adjusted to maximum capacity via the boost pressure in a closed circuit, after the machine starts. The proportional valve **Y002** is energised.

As the speed of the diesel engine increases, the proportional valve **Y002** on the variable displacement motor **VII** is controlled by the traction electronics **N001** according to a characteristic curve. The proportional valve **Y002** is de-energised and the regulation then occurs purely hydraulically. I.e. the variable displacement motor **VIII** is adjusted to a greater capacity via the high pressure, as the speed of the diesel engine decreases (e.g. on uphill gradients). The driving speed reduces proportionally to the increasing high pressure.

Boost pressure

The boost pressure pump **001** supplies different functions:

- Drive pump **VII**
- Differential lock
- Pilot block, solenoid valves **XII**
- Hydraulic control unit **XIII**

The oil pumped by the boost pump **001** creates a boost pressure against the boost pressure limiting valve **037**. Depending on the spring setting in the boost pressure limiting valve **037**, the oil flow is prestressed and after reaching the set pressure it is released to the hydraulic oil tank. The boost pressure valve **037** is adjustable and must be set whenever the variable displacement pump **VII** is replaced.

The boost pressure is applied to the proportional valves **Y004/Y005** and the multifunctional valves **040/041**. So whenever the diesel engine starts running, the boost pump feeds into the closed circuit via the multifunctional valves **040/041.**

Inching function

The inching signal comes from the position encoder **R002**.

When the brake pedal is actuated, the position encoder **R002** is adjusted. The modified value from the position encoder **R002** is conveyed to the traction electronics **N001**. The energisation of the proportional valves **Y002/Y004/Y005** is thus reduced according to a permanently programmed characteristic curve and the driving speed is decreased.

Low-speed control

The creep gear potentiometer **R003** can only be used in Snail mode.

The creep gear potentiometer **R003** has a redundant layout with the signals 0.5 – 4.5 V and 4.5 – 0.5 V to the traction electronics **N001**.

The traction electronics **N001** reduces the current on the proportional valves **Y004/Y005** according to a permanently programmed characteristic curve.

If a driving speed is set via the creep gear potentiometer **R003**, this speed is maintained automatically even under a load (uphill travel).

Speed ranges

The different driving speeds are possible in forward and reverse and are switched between turtle/hare mode with the 1st/2nd speed switch **S021**. These are dependent on the respective steering mode, for safety reasons.

A signal is sent from the 1st/2nd speed switch **S021** to the steering electronics **D001**, which relays it to the traction electronics **N001** and the mini-relay **K058**. A signal is also sent from the mini-relay **K058** to the traction electronics **N001**. The traction electronics **N001** then switches the drive ranges, taking account of the relevant steering mode.

If errors are detected in the system, the travelling drive is reduced to turtle mode or switched to save mode - i.e. the vehicle stops - depending on the type of error.

Via the speed sensor **B009** the driving speed is measured at the variable displacement motor **VIII** and communicated to the traction electronics **N001** and the controller **N004.**

The traction electronics **N001** processes the data for the load stabiliser and the speed limiter.

The controller **N004** processes the data and sends them as a CAN message to the display **P014**. The driving speed is shown in the display **P011**.

Driving speeds with variable displacement motor VIII

Speed range	Speed	Steering mode
Snail	0 – 7 kph (0 – 4.3 mph)	All-wheel/front wheel/crab steering
Tortoise	0–15 km/h (0–9.3 mph)	All-wheel/front wheel/crab steering
Hare	0–30 km/h (0–18.6 mph)	All-wheel, front wheel

Speed sensor B009, variable displacement motor

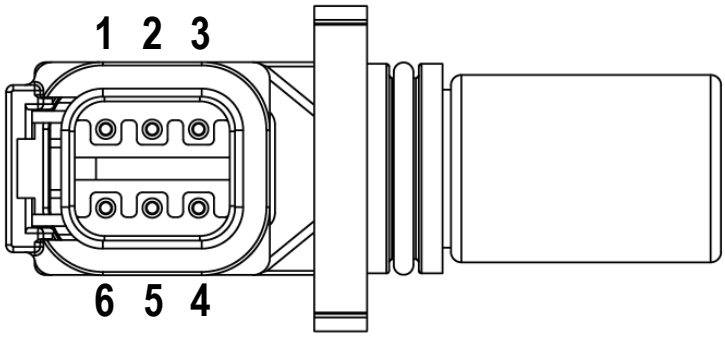

PIN	Connection	to PIN	Measuring range
1	Output to traction electronics **N001**	CC1 (5)	Signal 2 frequency
2	Output to traction electronics **N001**	CC2 (4)	Direction of rotation signal (0 – 5 V)
3	Output to traction electronics **N004**	XE15 (1-50)	Signal 1 speed (5 V)
4	Input from traction electronics **N001**	CC1 (8)	5 V
5	Input from traction electronics **N001**	CC1 (9)	Sensor ground
6	–	–	–

Function description

The speed sensor **B009** takes up the revolutions on the drive shaft in the variable displacement motor. The drive electronics **N001** process the signal for speed display, speed limiter, and load stabiliser.

Speed sensor B010, drive pump

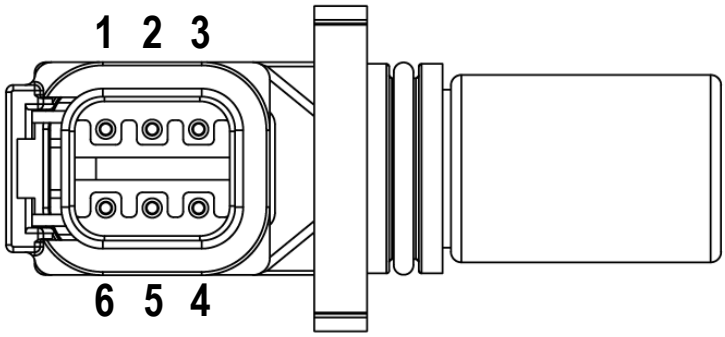

PIN	Connection	to PIN	Measuring range
1	–	–	–
2	–	–	–
3	Output to traction electronics **N001**	PPU (2)	Signal
4	Input from traction electronics **N001**	PPU (3)	5 V
5	Input from traction electronics **N001**	PPU (1)	Sensor ground
6	–	–	–

Inching position encoder R002

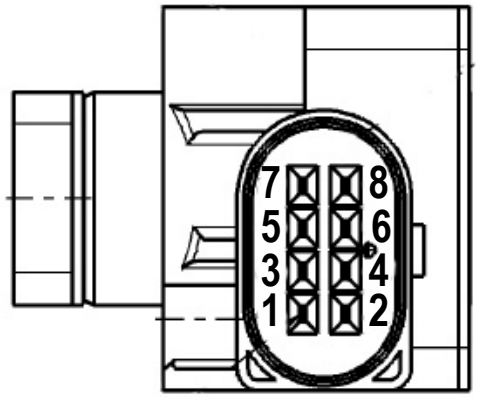

PIN	Connection	to PIN	Measuring range
1	Input from traction electronics **N001**	CC2 (5)	5 V
2	Output to traction electronics **N001**	CC2 (7)	Signal 1 0.5 – 4.5 V
3	–	–	–
4	Input from traction electronics **N001**	CC2 (5)	5 V
5	Output to traction electronics **N001**	CC2 (1)	Signal 2 4.5 – 0.5 V
6	–	–	–
7	Input from traction electronics **N001**	CC2 (6)	Sensor ground
8	Input from traction electronics **N001**	CC2 (6)	Sensor ground

Function description

When the brake pedal is actuated the inching position encoder **R002** is actuated first of all, via a linkage.

This means that the traction electronics **N001** receives an acknowledgement, via the inching angle of rotation sensor **R002** on the brake pedal, to reduce the variable displacement pump **VII** using a characteristic curve. The vehicle's speed is slowed down.

Creep gear potentiometer R003 (option)

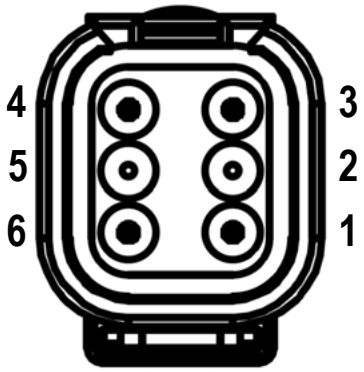

PIN	Connection	to PIN	Measuring range
1	Input from traction electronics **N001**	CC1 (3)	5 V
2	Output to traction electronics **N001**	CC1 (10)	Signal
3	Output to traction electronics **N001**	CC1 (4)	Sensor ground
4	Input from traction electronics **N001**	CC1 (3)	5 V
5	Output to traction electronics **N001**	CC1 (11)	Signal
6	Output to traction electronics **N001**	CC1 (4)	Sensor ground

Handbrake switch S011

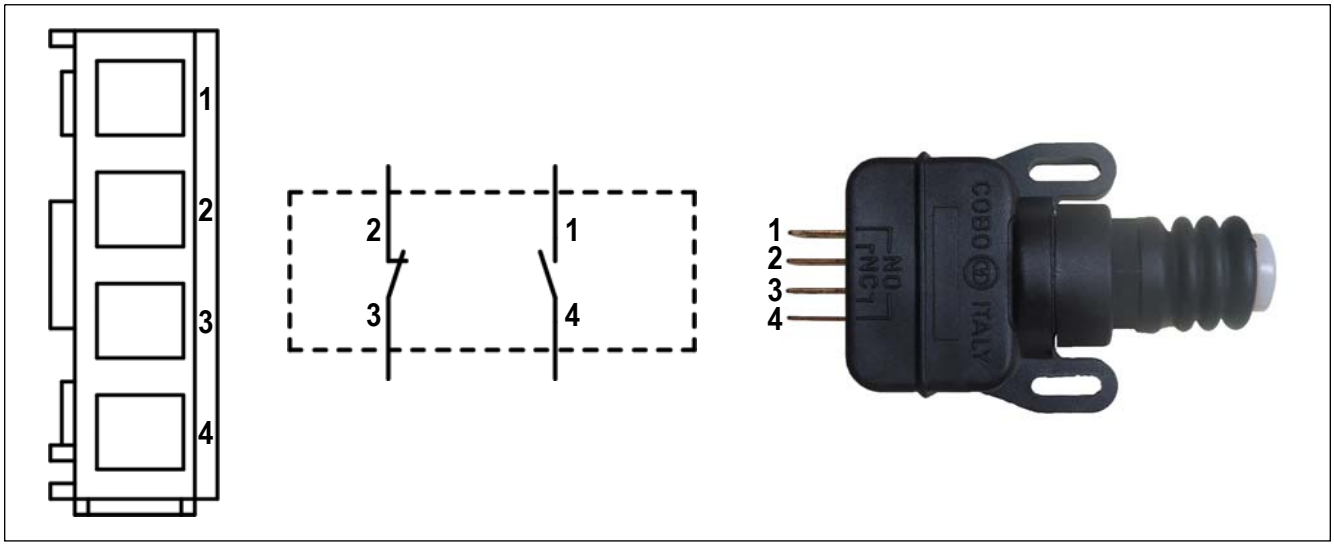

PIN	Connection	to PIN	Measuring range	
			not actuated	Actuated
1	Board voltage of F014/5A	XP03 (15)	12 V	12 V
2	Sensor ground	XE04 (2-43)	Ground	
3	Output to the controller **N004**	XE15 (1-47)	–	Ground
4	Output to the controller **N004**	XE15 (1-23) K111 (86)	0 V	12 V

Release the parking brake

If the parking brake is released, the hand brake switch **S011** releases the signal for driving.

Monitoring the parking brake

The hand brake switch **S011** and control lamp **H018** display when a parking brake has been engaged.

Start interlock

If the hand-brake switch **S011** is not activated (parking brake is on), the vehicle can be started.

If the hand-brake switch S011 is activated (parking brake is released), the vehicle cannot be started.

Operator presence switch S104

The seat contact switch **S104** is composed of two switches that have been put into a single casing.

Driver not seated on the seat

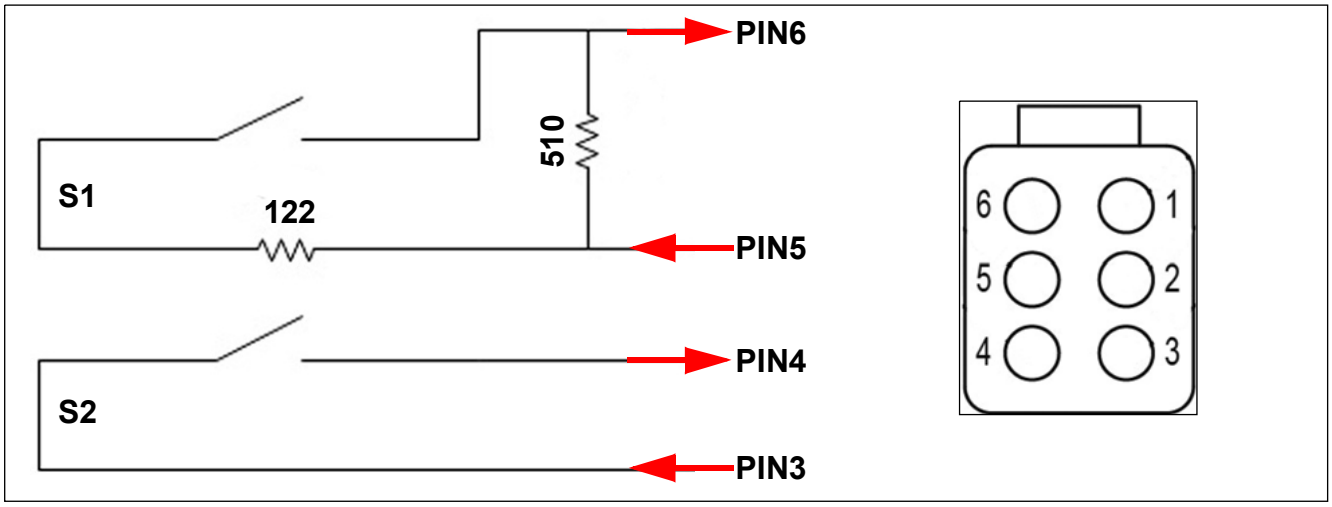

PIN	Connection	To PIN	Measuring range
1	Board voltage F038/25A (for air cushioned seat option)	–	12 V
2	Ground	Cabin	Ground
3	On-board voltage F014/5A	–	12 V
4	Signal to the controller **N004**	XE15 (1-39)	0 V
5	Output from the controller **N004**	XE15 (1-04)	12 V
6	Signal to the controller **N004**	XE04 (2-44)	2 – 3 V

Operator not on seat when the function starts

Seat contact switch open

- Diesel engine cannot be started.
- The travel direction cannot be selected.

The following proportional valves are not energized.

1. Raising **Y066,** lowering **Y067** of telescopic arm
2. Fill shovel **Y068,** Empty shovel **Y069**
3. Retraction **Y023,** extension **Y024** of telescopic arm
4. Locking **Y016,** unlocking **Y017**
5. Solenoid valve for quickhitch lock **Y025**

Upper/lower rear additional control circuit

1. Raising **Y044** or lowering **Y045** tipper or raising **Y044** or lowering **Y045** auto hitch
2. Auto hitch tipper switch-over **Y046**
3. Unlock auto hitch **Y047**

Operator not in seat during active function

The following valves remain energized, even when the operator leaves the seat during the activated function.

Upper/lower rear additional control circuit

1. Raising **Y044** or lowering **Y045** tipper or raising **Y044** or lowering **Y045** auto hitch
2. Auto hitch tipper switch-over **Y046**
3. Locking permanent function of third control circuit **Y016**
4. Solenoid valve for changeover of front 4th control circuit **Y051**
5. PTO solenoid valve **Y120**
6. Rear hitch solenoid valves **Y117**, **Y118**, **Y129**

If the operator leaves the seat for longer than 3 s, the following functions will be stopped.

1. Retraction **Y023,** extension **Y024** of telescopic arm
2. Raising **Y066,** lowering **Y067** of telescopic arm
3. Fill shovel **Y068,** Empty shovel **Y069**
4. Locking **Y016,** unlocking **Y017**
5. If the lowering function**Y067** is still active after 3 s, the lowering speed is throttled in relation to the driving speed until the standstill of the lowering movement.
6. Below a speed of 7 km/h (4.3 mph), the drive is switched into neutral if the operator leaves the seat for more than 5 s.
7. If the driving speed is below 0.5 km/h (0.3 mph), after 1 s, it will be switched to neutral and a warning tone will sound.
8. A warning signal sounds at speeds over 7 km/h (4.3 mph)

Driver seated on the seat

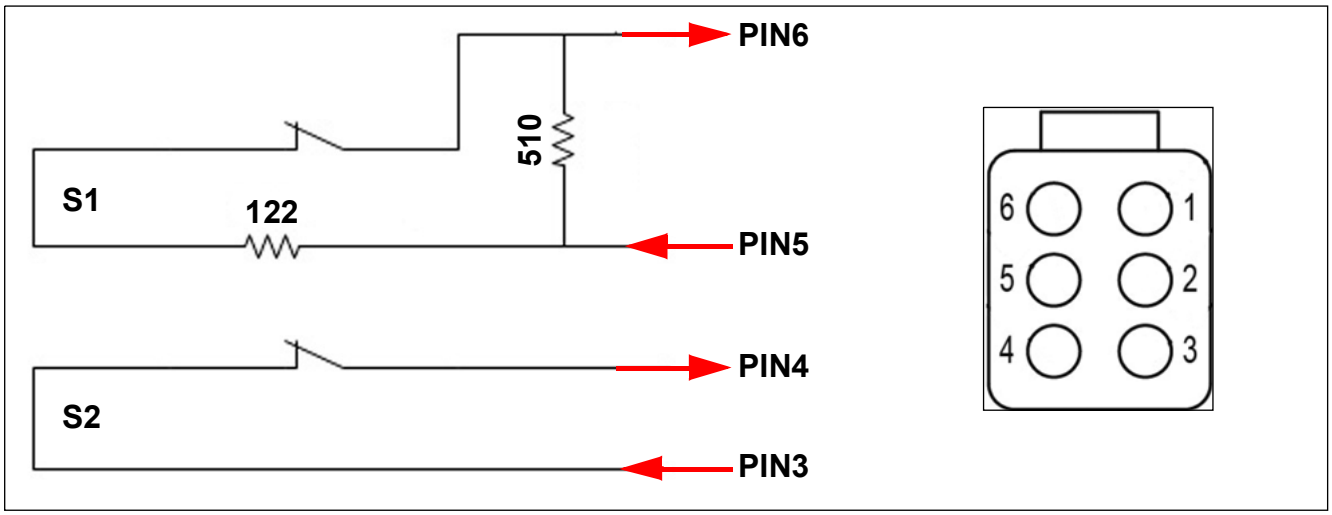

PIN	Connection	To PIN	Measuring range
1	Board voltage F038/25A (for air cushioned seat option)	–	12 V
2	Ground	Cabin	Ground
3	On-board voltage F014/5A	–	12 V
4	Signal to the controller **N004**	XE15 (1-39)	12 V
5	Output from the controller **N004**	XE15 (1-04)	12 V
6	Signal to the controller **N004**	XE04 (2-44)	5 – 7 V

If a voltage of 5–7 V is applied to plug XE15 (1-04) and a voltage of 12 V to plug XE15 (1-39), the operator is in the operator's seat.

Seat contact switch closed

The vehicle can be used to its full extent

Machine runs without the driver on the seat

➥ The valves for the additional control circuits continue to be energised but have to be switched on before (operator on the seat)

If the operator leaves the seat for longer than 3 s, the following functions will be stopped.

1. Retraction **Y023,** extension **Y024** of telescopic arm
2. Raising **Y066,** lowering **Y067** of telescopic arm
3. Fill shovel **Y068,** Empty shovel **Y069**
4. Locking **Y016,** unlocking **Y017**
5. If the lowering function **Y067** is still active after 3 s, the lowering speed is throttled in relation to the driving speed until the standstill of the lowering movement.
6. Below a speed of 7 km/h (4.3 mph), the drive is switched into neutral if the operator leaves the seat for more than 5 s.
7. If the driving speed is below 0.5 km/h (0.3 mph), after 1 s, it will be switched to neutral and a warning tone will sound.
8. A warning signal sounds at speeds over 7 km/h (4.3 mph)

Belt contact switch S123 (option)

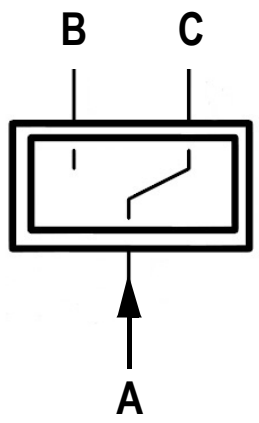

PIN	Connection	KCN (PIN)	Measuring range	
			buckled in	Not buckled in
A	On-board voltage F014/5A	–	12 V	12 V
B	Input to controller **N004**	XE15 (1–15)	10 V	0 V
C	Output to switching relay **K110**	K110 (86)	0 V	12 V

Seat belt not fastened

- Diesel engine cannot be started.
- The travel direction cannot be selected.

The following proportional valves are not energized.

1. Raising **Y066,** lowering **Y067** of telescopic arm
2. Fill shovel **Y068,** Empty shovel **Y069**
3. Retraction **Y023,** extension **Y024** of telescopic arm
4. Locking **Y016,** unlocking **Y017**
5. Solenoid valve for quickhitch lock **Y025**

Upper/lower rear additional control circuit

1. Raising **Y044** or lowering **Y045** tipper or raising **Y044** or lowering **Y045** auto hitch
2. Auto hitch tipper switch-over **Y046**

- Unlock auto hitch **Y047**

6 Brakes

6.1 Functional characteristics of brakes

Brake/inching pedal

The brake-inching pedal consists of 3 components

Foot pedal, displacement piston **030**, inching sensor **R002**

Via the foot brake, a force (F) is applied to the displacement piston. By adjusting the position of the displacement piston, the brake fluid is conveyed to the brake calliper at the differential of the rear axle. At the same time as when the foot pedal is activated, a turn potentiometer for inching is also activated. The ascertained value is transmitted to the traction electronics **N001**, which subsequently reduce the volume flow of the hydraulic pump. This causes the speed of the vehicle to be slowed down.

Release the parking brake

When the parking brake is released, the parking brake switch **S011** triggers the enabling signal for the diesel engine to start and drive

Starting interlock

The machine will not start unless the parking brake is applied.

Monitoring the parking brake

Activating the switch **S011** and the indicator light **H018** causes the parking brake to be displayed when it is applied.

Service brake

Foot-operated, hydraulic disc brake at the rear axle inlet.

Parking brake

Manual mechanical disc brake at rear axle input

Inch sensor R002

When the brake pedal is operated, first the inching sensor **R002** is activated by means of a rod assembly. After the brake pedal travels a path of approx. 30 mm (1.18 in), the main brake cylinder**030** is activated. This means that via the inching sensor **R002** at the brake pedal, the traction electronics **N001** receive a check-back signal to reduce the variable displacement pump **VII** according to a characteristic curve. The vehicle's speed is slowed down.

For an inch value of 2000 digits, the drive electronics **N001** switches an output signal to the relay **K030** for the brake lights.

Hydraulic trailer brake valve 140

The trailer brake valve **140** is controlled via the main brake cylinder **030**. By operating the brake pedal, first the inching sensor **R002** is activated by means of a rod assembly and the signal is conveyed to the traction electronics **N001**. The traction electronics **N001** control the proportional valve **Y113** for trailer advancement. The further the brake pedal is pushed, the higher the electric current at the proportional valve **Y113** for trailer advancement. This increases the pressure (advancement) on the trailer brake valve **140.** At the same time, the pressure applied to the trailer brake valve **140** by the main brake cylinder is increased.

2-fold valve block 162 (only in combination with trailer valve 140)

The 2-fold valve block **162** consists of 2 proportional valves for controlling trailer advancement **Y113** and auto hitch **Y047**.

The proportional valve **Y113** for trailer advancement is supplied by the charge pump **001**. This means that there is always a certain level of pilot control boost pressure present at the proportional valve **Y113**. The higher the electric current at the proportional valve **Y113** the higher the pressure applied to the trailer brake valve **140.**

Main brake cylinder 030

The main brake cylinder **030** is designed as a single-circuit brake piston. Operation of the brake pedal causes a ram to move the cylinder, thus conveying the liquid to the brake calliper.

Brake calliper, rear axle 161

The brake calliper **160** is attached to the axle inlet of the rear axle. On the brake calliper of the front axle, **160** there is a parking brake via a cable on the brake calliper **160** of the rear axle. The brake calliper is a floating calliper.

6.2 Brake components

Hydraulic components

Pos.	Component	Remarks
012	Fan fixed displacement pump	11 ccm/U (0.67 in^3)
001	Boost pump	12 ccm/U (0.73 in^3)
030	Master brake cylinder	ATF oil
140	Trailer brake valve (France)	120 – 140 bar (1740.45 – 2030.53 psi)
161	Brake calliper, rear axle	–
162	2-fold valve block, only for hydraulic trailer brakes (Y113, Y047)	Parking brake, differential lock
V	Hydraulic trailer brake connection	–

Electrical components

Pos.	Component	Measured value
H018	Indicator light, parking brake	Indicating instrument
H078	Combined brake light (H020)	–
H079	Combined brake light (H021)	–
K030	Brake lights switching relay	12 V
R002	Inching angle of rotation sensor	5 V
N001	Drive electronics	H1 AC control
N015	Controller N004/N015	TTC580-CB
S011	Hand-brake switch, parking brake	12 V

Gear pump 012

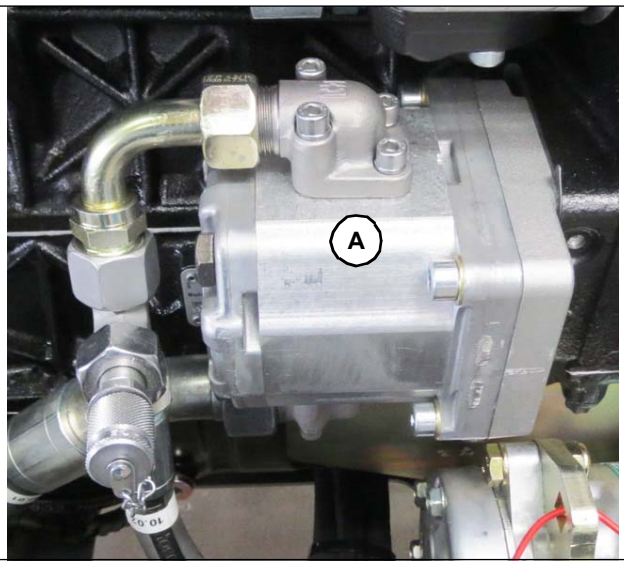

Pos.	Type	Remarks	System pressure
A	418	11 ccm/U (0.67 in^3)	210 bar (3045.79 psi)

Function description

The gear pump **A** is responsible for the oil supply of the fan and trailer brake.

Main brake cylinder 030

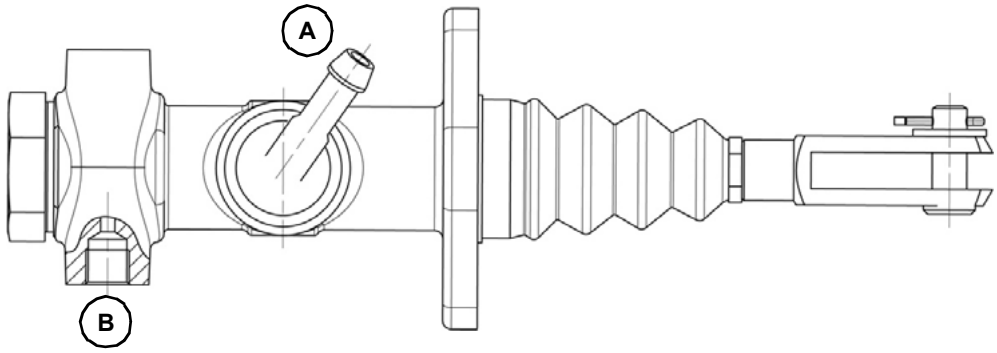

Connection	Power supply
A	Inlet from brake liquid tank **029**
B	Output to the brake calliper **160**

Function description

The main brake cylinder **030** is controlled by the brake pedal. When the brake pedal is operated, first the inching sensor **R002** is activated by means of a rod assembly. Following travel of the brake pedal of approx. 30 mm (1.18 in), the main brake cylinder **030** is operated. The pressure at connection B is conveyed directly to the brake calliper at the rear axle **161**. A maximum pressure of 50 bar (725.18 psi) can be generated. At the connection **A**, the surge tank **029** is connected in order to provide the main brake cylinder **030** with sufficient fluid.

Hydraulic trailer brake valve 140

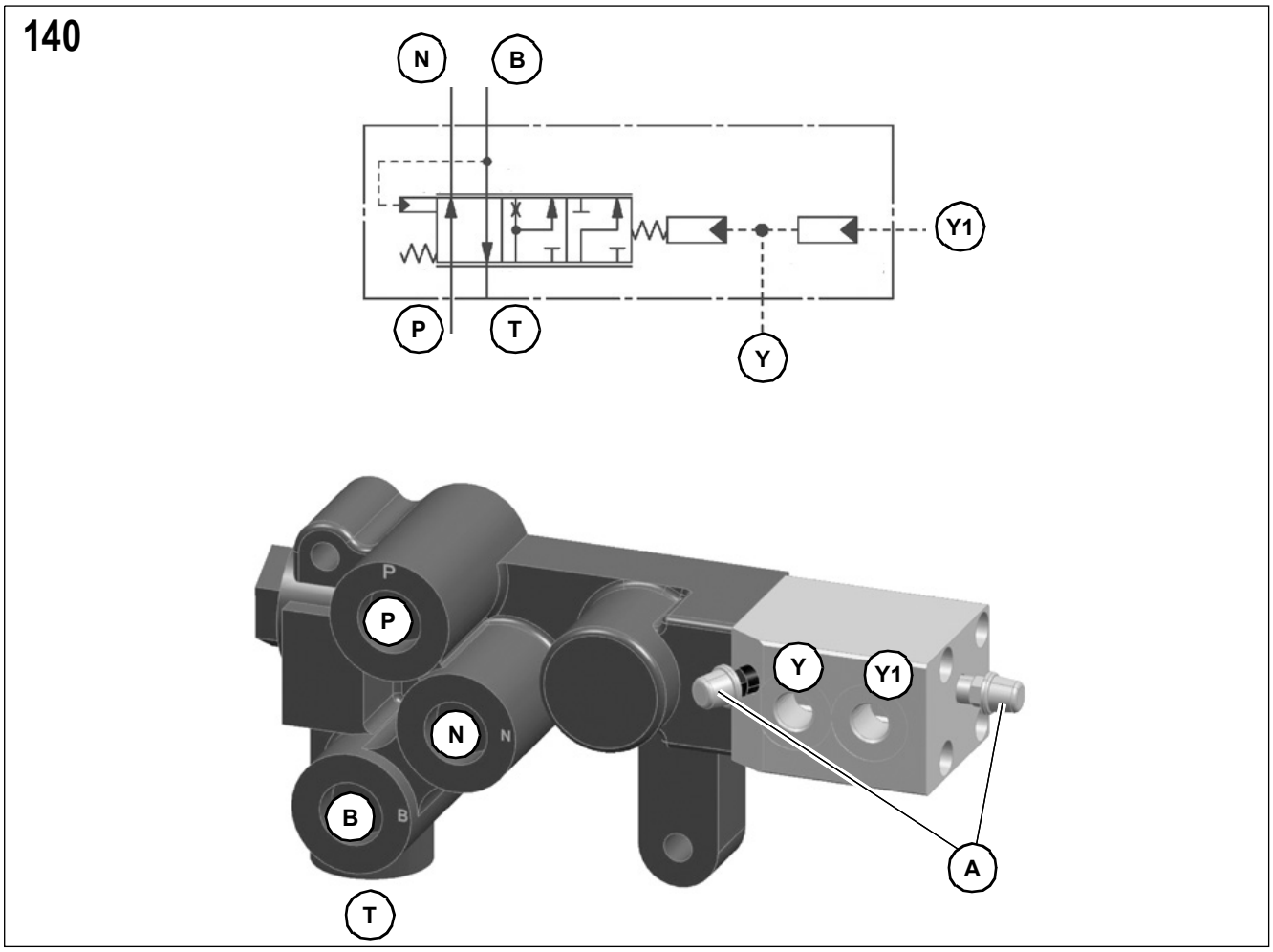

Connection	Power supply
A	Bleeder valve
B	Output to trailer connection
N	Output to fan motor **III** (reversible fan)
P	Gear pump input **012**
T	Output to tank **XX**
Y	Control of advancement of valve block **162** Connection **A** (Proportional valve Y113)
Y1	Control of the main brake cylinder **030**

Function description

The trailer brake valve is used to brake a trailer hydraulically. The valve controls the hydraulic brakes of the trailer.

Function

If the brake is not applied, the connection **B** (trailer brake) to connection T (tank) remains open. This means that the trailer's brake line is depressurised. The connection P is switched to connection **N**. In this way, the flow of oil is directly conveyed by the gear pump **001.1** to the fan motor **014**.

Control of the trailer brake valve **140** is triggered by the brake pedal. This means that when the brake pedal is operated, the inching angle of rotation sensor **R002** is activated and issues a signal to the traction electronics **N001**. The traction electronics **N001** energise the proportional valve **Y113** according to a characteristic curve, which energises advancement for the trailer brake valve **140**. At the same time, pressure is applied to the trailer brake valve **140** via the main brake cylinder **030**.

The control piston from the trailer brake valve **140** is moved by the brake pedal travel and pressure from the main brake cylinder **030**. The control piston connects the connection **P** with the connection **B** trailer brake.

Hydraulic function

If the brake pedal is actuated, via the proportional valve **Y113** and directly via the brake pressure from hydraulic brake cylinder **030** a pressure signal is sent to the connection **Y** and **Y1** on the trailer brake valve**140**. This activates the trailer brake valve **140**. First, the connection **T** is closed opposite the connection**B** and the connection **P** (pilot control) to **N** and **B** is opened. Subsequently, pressure is built up in the trailer's brake system. If the main brake cylinder **030** is fully actuate, the connection **N** is closed to that the full volume flow that is available is led via connection **B** into the trailer brake system. As a result of the build-up of pressure in the trailer brake system, a resetting force is applied to the valve bar, which counters the active force via the connection **Y1** and **Y**. In such a case, when the brake is engaged for a longer period, the volume flow to the fan **014** is re-enabled via connection **N** and the pressure in the trailer brake system is retained. When the brake is released, the control pressure drops at connection **Y1** and **Y** and the trailer brake valve **140** returns to the starting position so that the pilot pressure from the trailer brake system at connection **B** to the tank can be relieved via connection **T**.

2-fold valve block 162

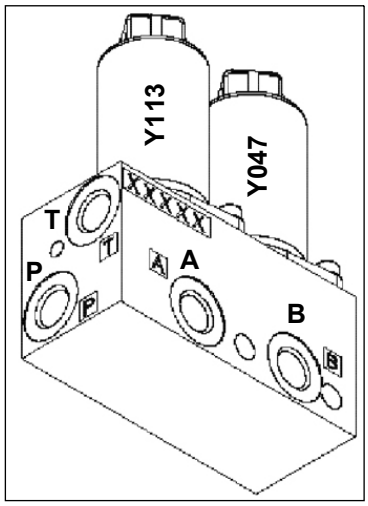

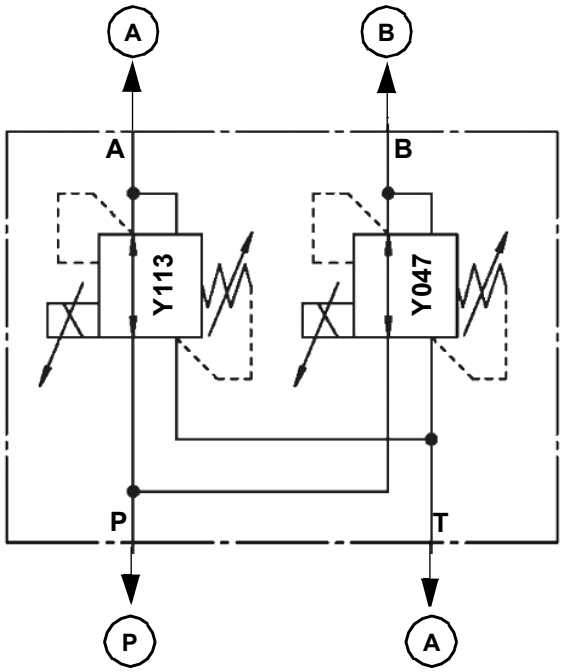

Connection	Power supply
A	Advance output to the trailer brake valve **140**connection (**Y**)
B	Output unlock autohitch **093**
P	Input from the charge pump **001** Connection M3 (variable displacement pump driving **VII**)
T	Output to tank **XX**

Component	Function	Remarks
Y047	Auto-Hitch unlock solenoid valve	12 V
Y113	Solenoid valve (hydraulic trailer brake)	PWM

Function description

The 2-fold valve block **162** consists of 2 proportional valves for controlling trailer advancement **Y113** and auto hitch **Y047**.

The proportional valve **Y113** for trailer advancement is supplied by the charge pump **001**. This means that there is always a certain level of boost pressure at the proportional valve **Y113**. The higher the electric current at the proportional valve **Y113** the higher the pressure applied to the trailer brake valve **140.** Control is done via a curve from the controller **N004**.

Service brake with parking brake, rear axle 161

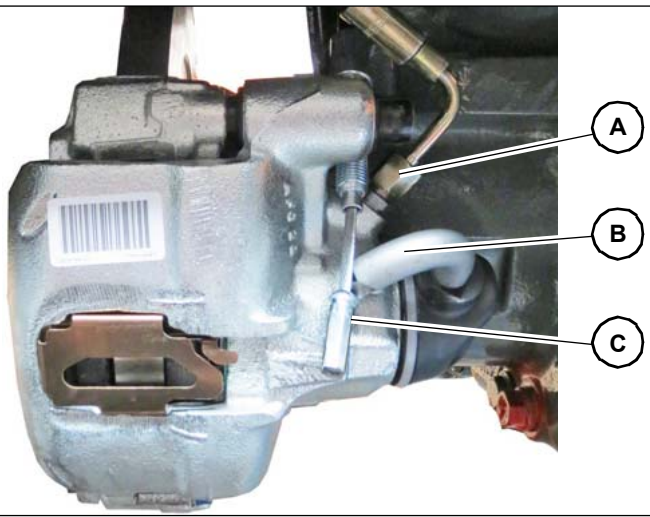

Brake vents

Pos.	Power supply
A	Hydraulic connection, service brake
B	Parking brake lever
C	Suspension cable for parking brake
D	Bleeder valve

6.3 Test report for brake system

Serial no.	Operating hours	Notes

Page	Test features	Note	Specified value	Measured value
6-11	Min. idling speed	Laptop	940 – 960 min^{-1} (rpm)	
6-11	Max. idling speed	Laptop	2550 – 2650 min^{-1} (rpm)	
6-12	Pilot pressure (boost pressure)	At max. engine speed	30 – 32 bar (435.11 – 464.1 psi)	

Checking the diesel engine speed

Test feature	Note	Remarks	Rated value
Min. idling speed	Diagnosis tool	–	940 – 960 min^{-1} (rpm)
Max. idling speed	Diagnosis tool	–	2550 – 2650 min^{-1} (rpm)

Checking

1. Apply the parking brake.
2. Connect diagnosis tool
3. Start the diesel engine.
4. Read the diesel engine speed using the diagnosis tool.

- Rated idle speed, bottom (idling speed).
- Rated idle speed, top (full throttle).

Boost pressure: check and adjust

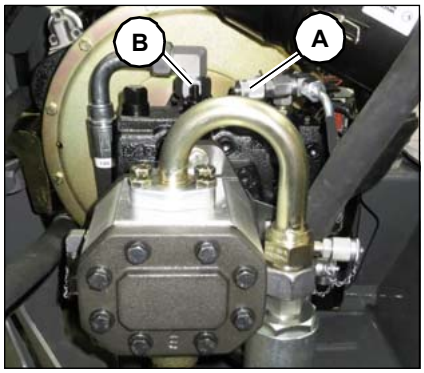

Checking

1. Put on parking brake
2. Connect sensor to test port **A** for boost pressure
3. Bring diesel engine up to full diesel engine speed
4. Ascertain boost pressure at full engine speed

There is a pressure difference of approx. 4 – 7 bar (58 – 101.5 psi) between the lower and upper idling speed

Adjustment

Required tools

- Hexagon socket AF 4
- Ring wrench AF 13

1. Boost pressure too low
   ➥ Screw in boost pressure valve **B**
2. Boost pressure too high

Unscrew boost pressure valve **B**

6.4 Service brake control

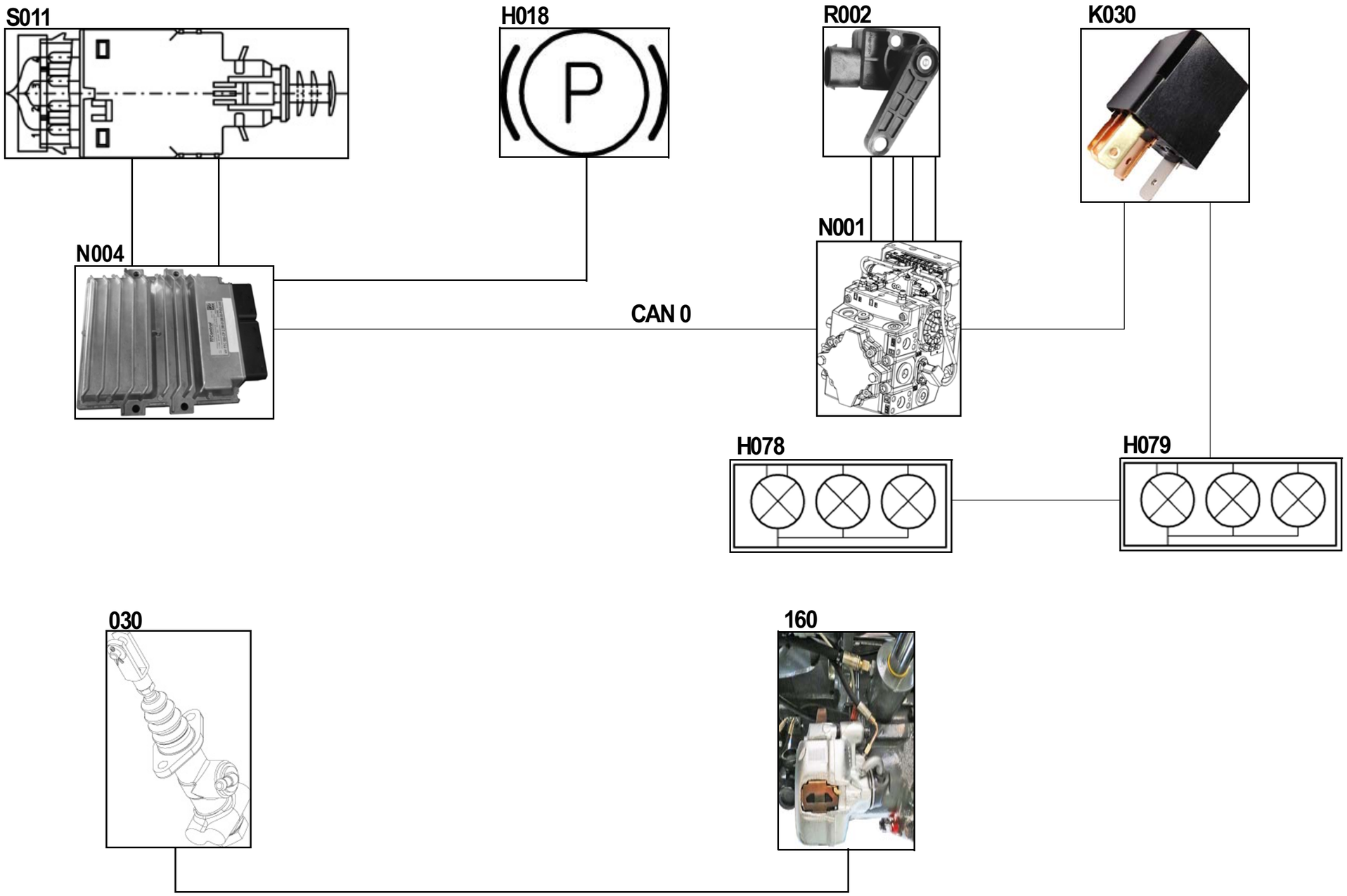

Description of service brake

Hydraulic components

Pos.	Component	Remarks
030	Master brake cylinder	ATV_oil
161	Rear axle service brake	–

Electrical components

Pos.	Component	Measured value
H018	Indicator light, parking brake	Indicating instrument
H078	Combined brake light (H020)	–
H079	Combined brake light (H021)	–
K030	Brake lights switching relay	12 V
R002	Inching angle of rotation sensor	5 V
N001	Drive electronics	H1 AC control
N004	Controller N004	TTC580-CB
S011	Hand-brake switch, parking brake	12 V

Main brake cylinder 030

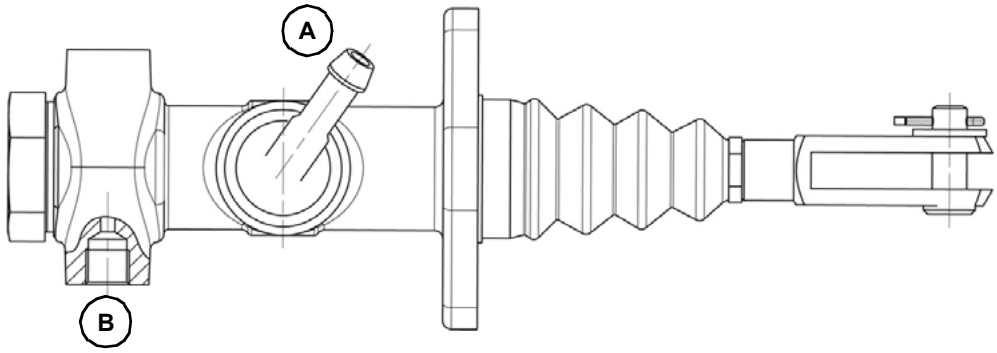

Connection	Power supply
A	Inlet from brake liquid tank **029**
B	Output to the brake calliper **160**

Function description

The main brake cylinder **030** is controlled by the brake pedal. When the brake pedal is operated, first the inching sensor **R002** is activated by means of a rod assembly. After the brake pedal travels a path of approx. 30 mm (1.18 in), the main brake cylinder **030** is actuated. The pressure at connection B is conveyed directly to the brake calliper of the rear axle **161**. A maximum pressure of 50 bar (725.18 psi) can be generated. At the connection **A**, the surge tank **029** is connected in order to provide the main brake cylinder **030** with sufficient fluid.

Service brake with parking brake, rear axle 161

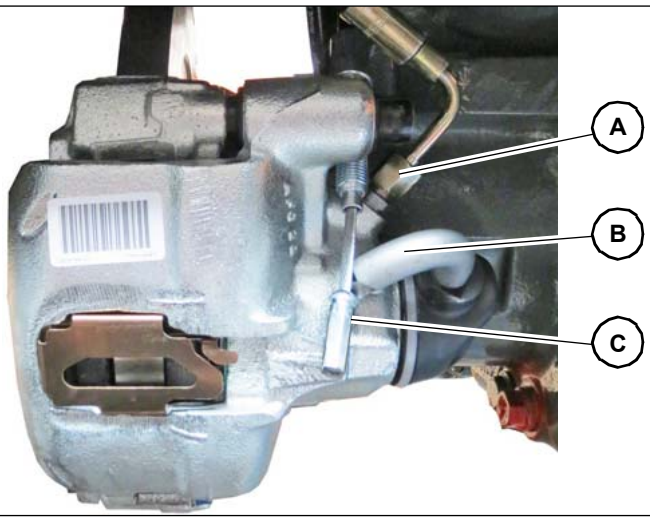

Brake vents

Pos.	Power supply
A	Hydraulic connection, service brake
B	Parking brake lever
C	Suspension cable for parking brake
D	Bleeder valve

Switching relay K030

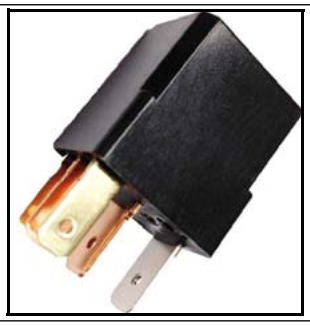

PIN	Connection	to PIN	Measuring range
30	On-board voltage F027/10A	K030 (30)	12 V
85	Output to drive electronics N001 plug CC2	N001 (CC2 - 9)	Ground
86	On-board voltage F027/10A	K030 (30)	12 V
87	Output to brake light H078/H079	XR02 (17)	12 V
87a	–	–	–

Function description

From an inch value of 2000 digits, the ground is switched from drive electronics **N001** to brake switch relay **K030** (85). Via clamp 87, the brake lights **H078**/**H079** are energized.

Inching position encoder R002

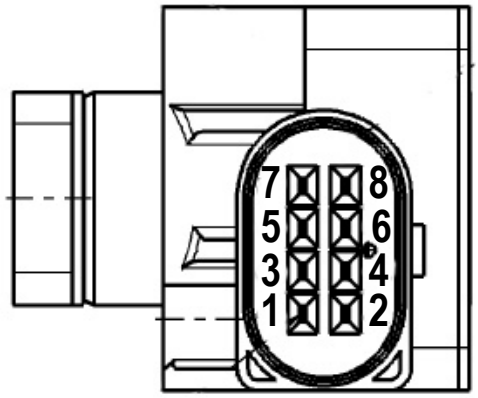

PIN	Connection	to PIN	Measuring range
1	Input from traction electronics **N001**	CC2 (5)	5 V
2	Output to traction electronics **N001**	CC2 (7)	Signal 1 0.5 – 4.5 V
3	–	–	–
4	Input from traction electronics **N001**	CC2 (5)	5 V
5	Output to traction electronics **N001**	CC2 (1)	Signal 2 4.5 – 0.5 V
6	–	–	–
7	Input from traction electronics **N001**	CC2 (6)	Sensor ground
8	Input from traction electronics **N001**	CC2 (6)	Sensor ground

Function description

When the brake pedal is actuated the inching position encoder **R002** is actuated first of all, via a linkage.

This means that the traction electronics **N001** receives an acknowledgement, via the inching angle of rotation sensor **R002** on the brake pedal, to reduce the variable displacement pump **VII** using a characteristic curve. The vehicle's speed is slowed down.

Handbrake switch S011

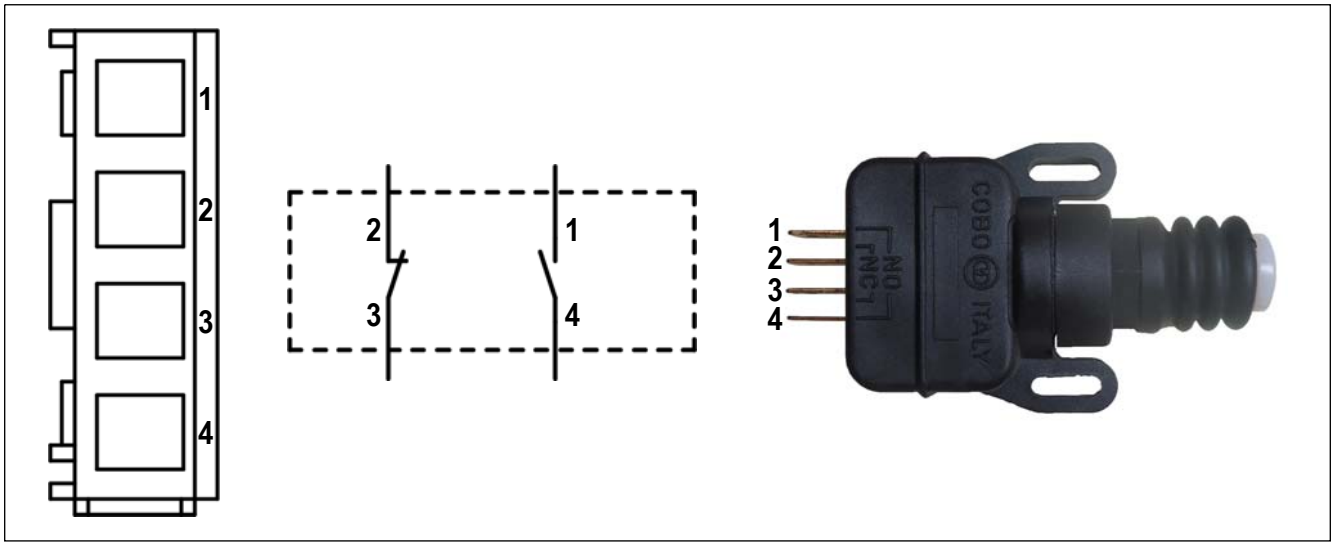

PIN	Connection	to PIN	Measuring range	
			not actuated	Actuated
1	Board voltage of F014/5A	XP03 (15)	12 V	12 V
2	Sensor ground	XE04 (2-43)	Ground	
3	Output to the controller **N004**	XE15 (1-47)	–	Ground
4	Output to the controller **N004**	XE15 (1-23) K111 (86)	0 V	12 V

Release the parking brake

If the parking brake is released, the hand brake switch **S011** releases the signal for driving.

Monitoring the parking brake

Actuation of the parking brake is indicated via hand brake switch **S011** and indicator light **H018**.

Start interlock

If the hand-brake switch **S011** is not activated (parking brake is on), the vehicle can be started.

If the hand-brake switch S011 is activated (parking brake is released), the vehicle cannot be started.

6.5 Hydraulic trailer brake

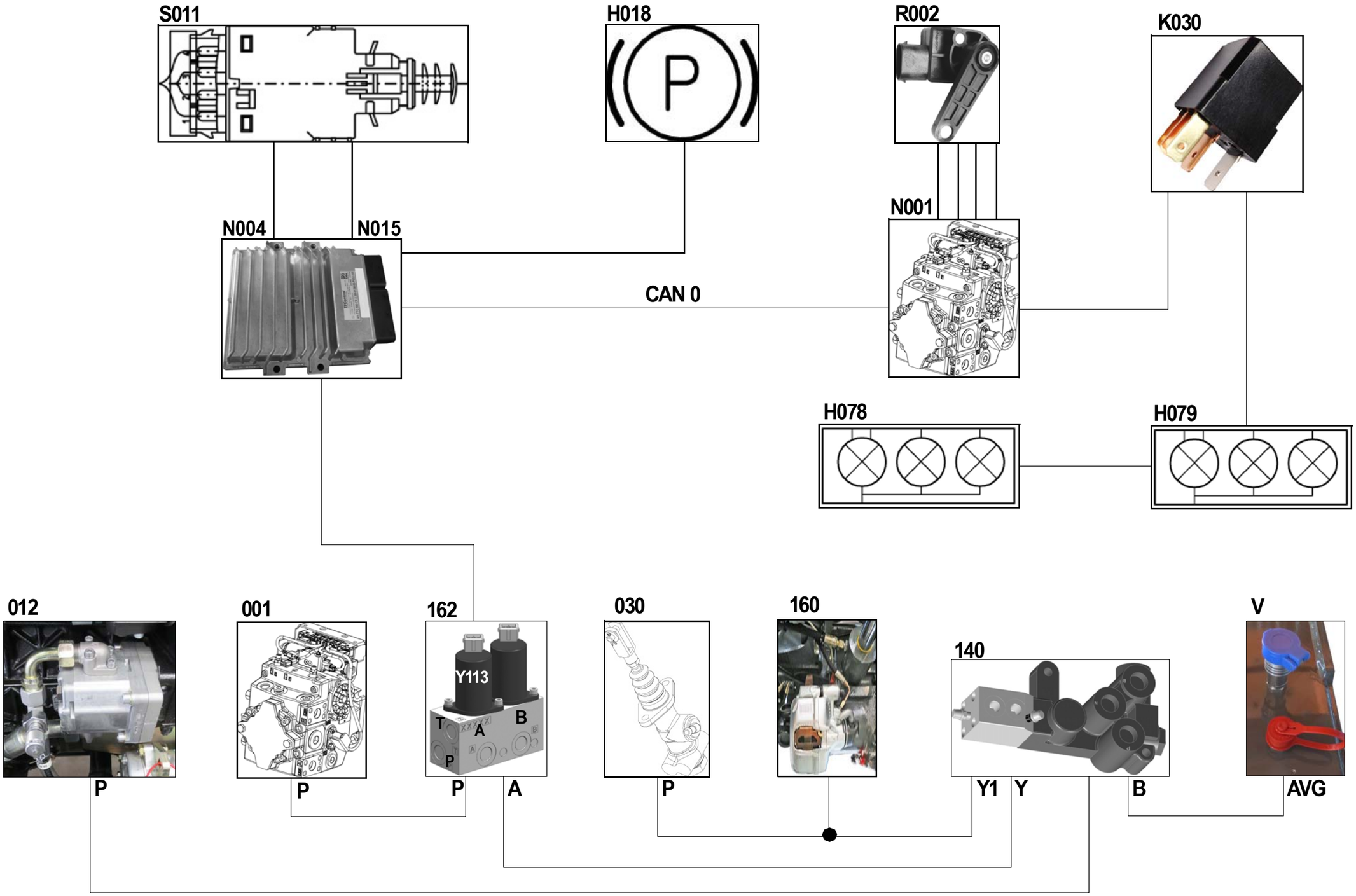

Description of hydraulic trailer brake

Hydraulic components

Pos.	Component	Remarks
012	Fan fixed displacement pump	11 ccm/U (0.67 in^3)
001	Charge pump	12 ccm/U (0.73 in^3)
030	Master brake cylinder	ATV_oil
140	Trailer brake valve (France)	120–140 bar (1740.45–2030.53 psi)
161	Brake calliper, rear axle	–
162	2-fold valve block, only for hydraulic trailer brakes (Y113, Y047)	Parking brake, differential lock
V	Hydraulic trailer brake connection	–

Electrical components

Pos.	Component	Measured value
H018	Indicator light, parking brake	Indicating instrument
H078	Combined brake light (H020)	–
H079	Combined brake light (H021)	–
K030	Brake lights switching relay	12 V
R002	Inching angle of rotation sensor	5 V
N001	Drive electronics	H1 AC control
N004	Controller N004	TTC580-CB
S011	Hand-brake switch, parking brake	12 V

Pos.	Component	Designation
CAN1	CAN1 – Work hydraulics	–
CAN0	CAN0 – Drive	–

Gear pump 012

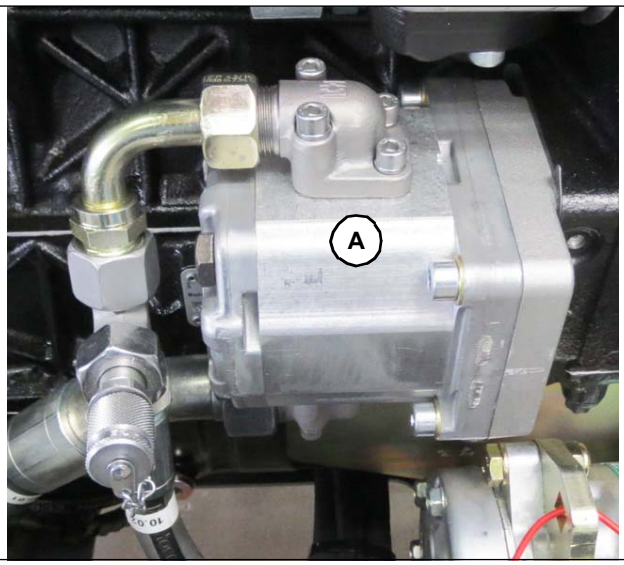

Pos.	Type	Remarks	System pressure
A	418	11 ccm/U (0.67 in^3)	210 bar (3045.79 psi)

Function description

The gear pump **A** is responsible for the oil supply of the fan and trailer brake.

Main brake cylinder 030

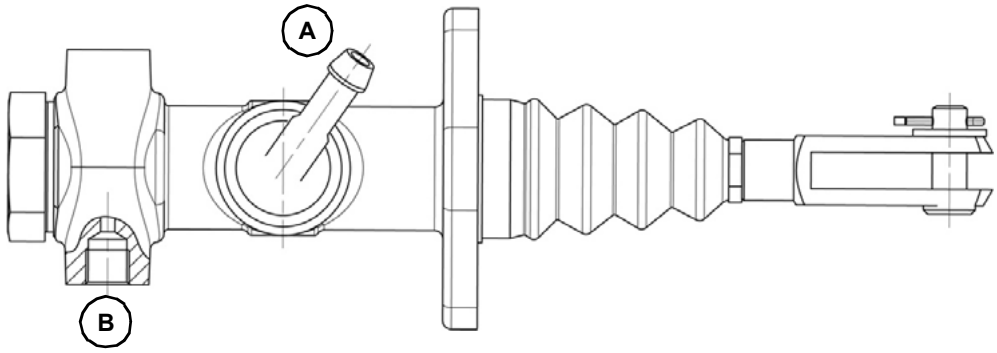

Connection	Power supply
A	Inlet from brake liquid tank **029**
B	Output to the brake calliper **160**

Function description

The main brake cylinder **030** is controlled by the brake pedal. When the brake pedal is operated, first the inching sensor **R002** is activated by means of a rod assembly. Following travel of the brake pedal of approx. 30 mm (1.18 in), the main brake cylinder **030** is operated. The pressure at connection B is conveyed directly to the brake calliper at the rear axle **161**. A maximum pressure of 50 bar (725.18 psi) can be generated. At the connection **A**, the surge tank **029** is connected in order to provide the main brake cylinder **030** with sufficient fluid.

Hydraulic trailer brake valve 140

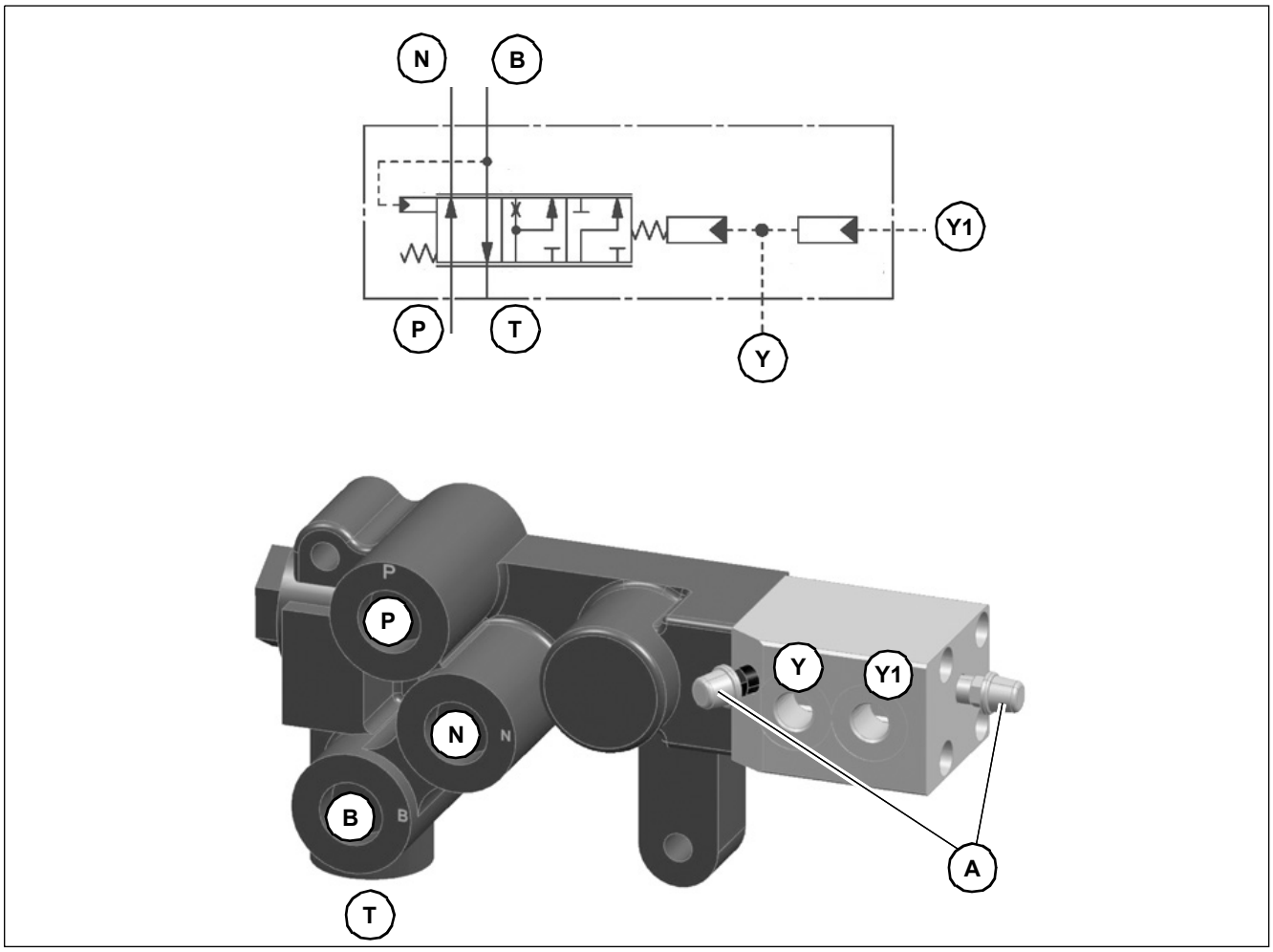

Connection	Power supply
A	Bleeder valve
B	Output to trailer connection
N	Output to fan motor **III** (reversible fan)
P	Gear pump input **012**
T	Output to tank **XX**
Y	Control of advancement of valve block **162** Connection **A** (Proportional valve Y113)
Y1	Control of the main brake cylinder **030**

Function description

The trailer brake valve is used to brake a trailer hydraulically. The valve controls the hydraulic brakes of the trailer.

Function

If the brake is not apply, the connection **B** (trailer brake) to the connect T (Tank) is open. This means that the trailer's brake line is depressurised. The connection P is switched to connection **N**. In this way, the flow of oil is directly conveyed by the gear pump **001.1** to the fan motor **014**.

Control of the trailer brake valve **140** is triggered by the brake pedal. This means that when the brake pedal is operated, the inching angle of rotation sensor **R002** is activated and issues a signal to the traction electronics **N001**. The traction electronics **N001** energise the proportional valve **Y113** according to a characteristic curve, which energises advancement for the trailer brake valve **140**. At the same time, pressure is applied to the trailer brake valve **140** via the main brake cylinder **030**.

The control piston from the trailer brake valve **140** is moved by the brake pedal travel and pressure from the main brake cylinder **030**. The control piston connects the connection **P** with the connection **B** trailer brake.

Hydraulic function

If the brake pedal is actuated, via the proportional valve **Y113** and directly via the brake pressure from the main brake cylinder **030** a pressure signal will be sent to connection **Y** and **Y1** on the trailer brake valve **140**. This activates the trailer brake valve **140**. First the connection **T** opposite the connection **B** is closed, and the connection **P** (pilot pressure) to **N** and **B** is opened. Subsequently, pressure is built up in the trailer's brake system. If the main brake cylinder **030** is fully actuated and the connection **N** is closed so that the full volume flow that is available is lead via connection **B** into the trailer brake system. As a result of the build-up of pressure in the trailer brake system, a resetting force is applied to the valve bar, which counters the active force via the connection **Y1** and **Y**. In such a case, when the brake is engaged for a longer period, the volume flow to the fan **014** is re-enabled via connection **N** and the pressure in the trailer brake system is retained. When the brake is released, the control pressure drops at connection **Y1** and **Y**, and the trailer brake **140** returns to the starting position so that the pilot pressure from the trailer brake system at connection **B** to the tank can be relieved via connection **T**.

2-fold valve block 162

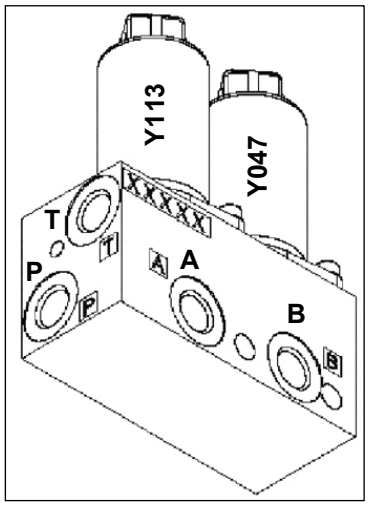

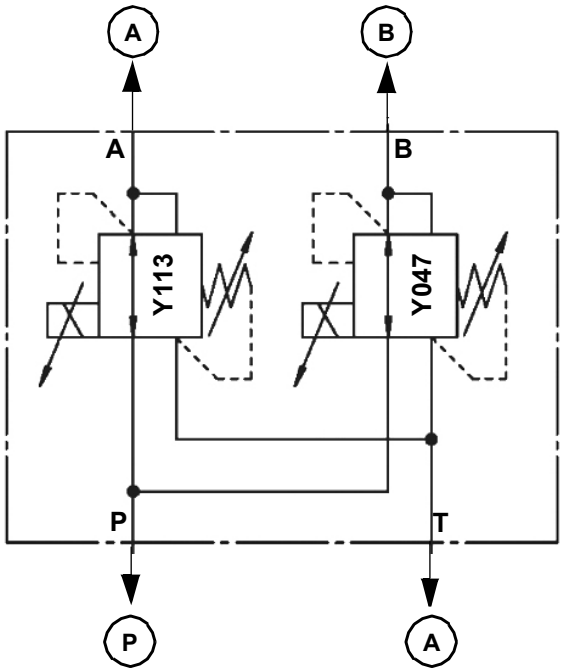

Connection	Power supply
A	Advance output to the trailer brake valve **140**connection (**Y**)
B	Output unlock autohitch **093**
P	Input from the charge pump **001** Connection M3 (variable displacement pump driving **VII**)
T	Output to tank **XX**

Component	Function	Remarks
Y047	Auto-Hitch unlock solenoid valve	12 V
Y113	Solenoid valve (hydraulic trailer brake)	PWM

Function description

The 2-fold valve block **162** consists of 2 proportional valves for controlling trailer advancement **Y113** and auto hitch **Y047**.

The proportional valve **Y113** for trailer advancement is supplied by the charge pump **001**. On the proportional valve **Y113**, there is always boost pressure. The higher the electric current at the proportional valve **Y113** the higher the pressure applied to the trailer brake valve **140.** Control is done via a curve from the controller **N004**.

Brake vents

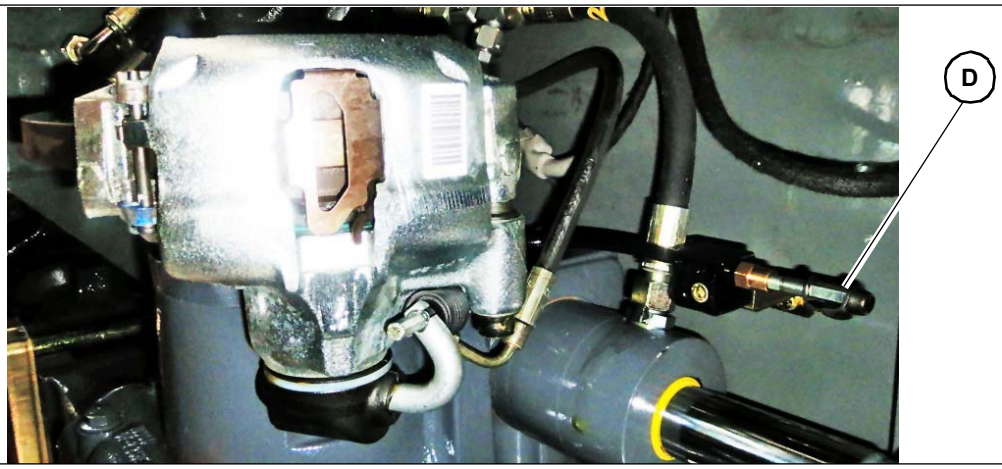

Pos.	Power supply
D	Bleeder valve

Switching relay K030

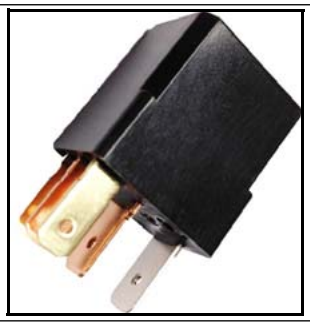

PIN	Connection	to PIN	Measuring range
30	Input Clamp 30 F027/10A	K030 (30)	12 V
85	Output to drive electronics N001 plug CC2	N001 (CC2 - 9)	Ground
86	Input Clamp 30 F027/10A	K030 (30)	12 V
87	Output to brake light H078/H079	XR02 (17)	12 V
87a	–	–	–

Function description

From an inch value of 2000 digits, the ground is switched from drive electronics **N001** to brake switch relay **K030** (85). Via clamp 87, the brake lights **H078**/**H079** are energized.

Inching position encoder R002

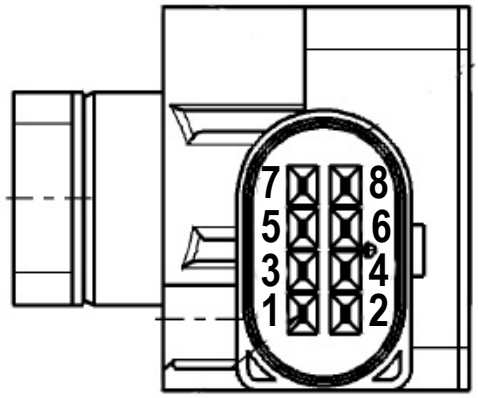

PIN	Connection	to PIN	Measuring range
1	Input from traction electronics **N001**	CC2 (5)	5 V
2	Output to traction electronics **N001**	CC2 (7)	Signal 1 0.5 – 4.5 V
3	–	–	–
4	Input from traction electronics **N001**	CC2 (5)	5 V
5	Output to traction electronics **N001**	CC2 (1)	Signal 2 4.5 – 0.5 V
6	–	–	–
7	Input from traction electronics **N001**	CC2 (6)	Sensor ground
8	Input from traction electronics **N001**	CC2 (6)	Sensor ground

Function description

When the brake pedal is actuated the inching position encoder **R002** is actuated first of all, via a linkage.

This means that the traction electronics **N001** receives an acknowledgement, via the inching angle of rotation sensor **R002** on the brake pedal, to reduce the variable displacement pump **VII** using a characteristic curve. The vehicle's speed is slowed down.

Handbrake switch S011

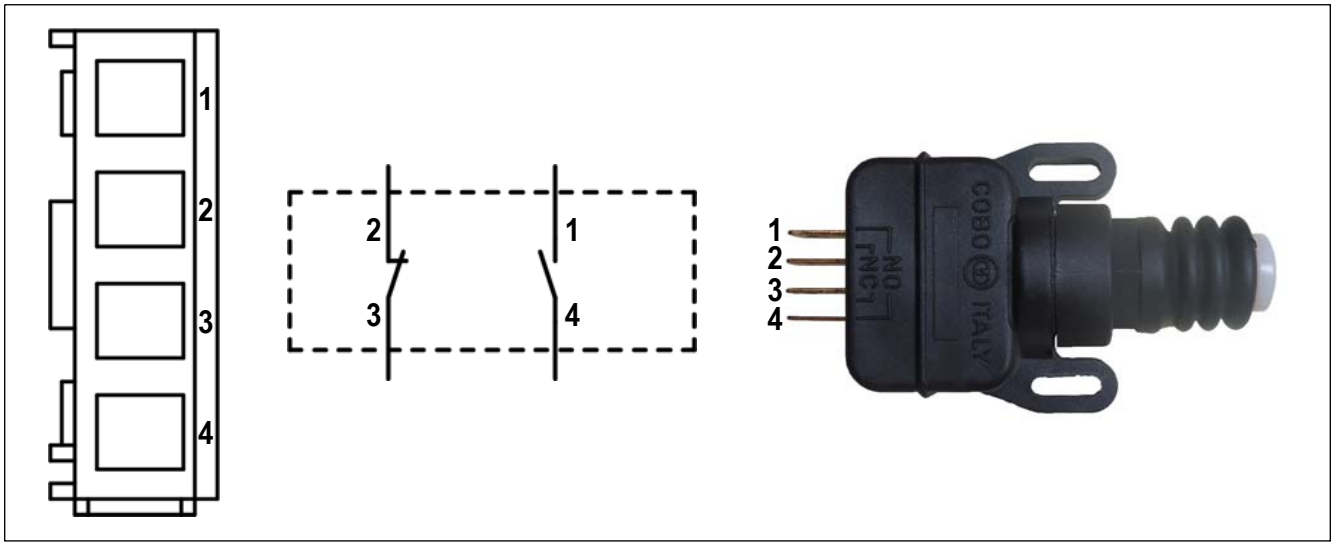

PIN	Connection	to PIN	Measuring range	
			not actuated	Actuated
1	Board voltage of F014/5A	XP03 (15)	12 V	12 V
2	Sensor ground	XE04 (2-43)	Ground	
3	Output to controller **N004**	XE15 (1-47)	–	Ground
4	Output to controller **N004**	XE15 (1-23) K111 (86)	0 V	12 V

Release the parking brake

When the parking brake is released, the hand brake switch**S011** releases the signal for driving.

Monitoring the parking brake

Actuation of the parking brake is indicated via hand brake switch **S011** and indicator light **H018**.

Start interlock

If the hand-brake switch **S011** is not activated (parking brake is on), the vehicle can be started.

If the hand-brake switch S011 is activated (parking brake is released), the vehicle cannot be started.

6.6 Safety instructions for hydraulic trailer brake

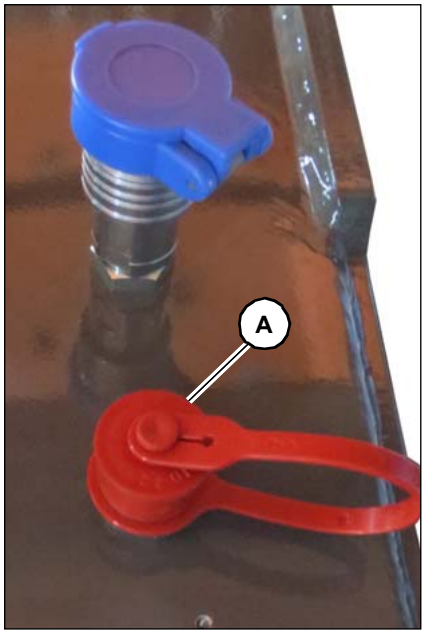

Important safety instructions

- Plug coupling **A** for the hydraulic trailer brake is installed at the rear of the machine (on the left in travel direction).
- The hydraulic trailer brake is operated with the machine's service brake!

Notice

The parking brake has **no** effect on the hydraulic trailer brake!

Notice

Only trailers with hydraulic brakes that are certified for a braking pressure of a maximum 150 bar (2175.6 psi) at full braking may be used!

Information

The hydraulic trailer brake is certified for public roads in Germany (StVZO German road traffic regulations) provided it is adapted to the tractor!
The maximum road travel speed is limited to 25 km/h (15.5 mph) in Germany (according to German traffic regulations).

► Refer to the National Type Approval (Germany), the Data Confirmation (Germany) or the licence certificate (Germany) for the applicable provisions!

► Get informed on and follow the legal regulations of your country, or have country-specific final acceptance performed!

Coupling a trailer brake hose

Notice

Clean the plug coupling carefully before connecting the flexible line of the trailer in order to ensure correct functioning and sealing!

► Inspection and maintenance work on the hydraulic brake may be performed only by trained personnel or an authorised service centre.

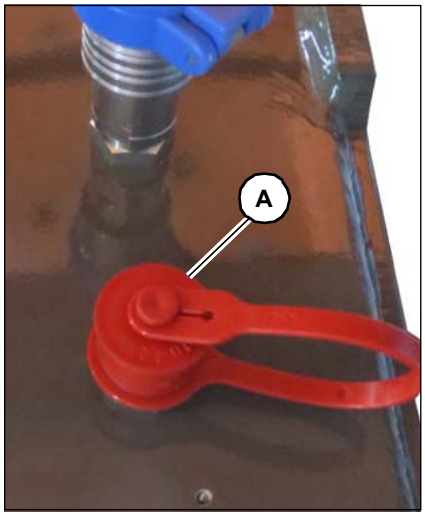

1. Connect trailer to the trailer coupling,
2. Clean the brake hose and plug coupling **A**.
3. Couple the brake hose to plug coupling **A**.
4. Establish the electric and hydraulic connections between the trailer and the tractor vehicle.
5. Remove the wheel chocks from the wheels of the trailer and safely store them on the trailer.
6. Release the trailer brake.

Refer to the Operator's Manual of the trailer

Performing machine travel with the hydraulic trailer brake

WARNING

Performing machine travel too fast can cause serious accidents!
The trailer brake can overheat on longer downhill stretches with the brake/inching pedal pressed only halfway through!

Can cause serious injury or death.

► Reduce the travel speed early enough before turning or downhill machine travel.

► Reduce engine speed: remove your foot from the accelerator pedal.

► Decelerate the tractor-trailer combination with the intermittent brake, briefly pressing down the brake/inching pedal **A** a number of times.

► Select the next lower speed range .

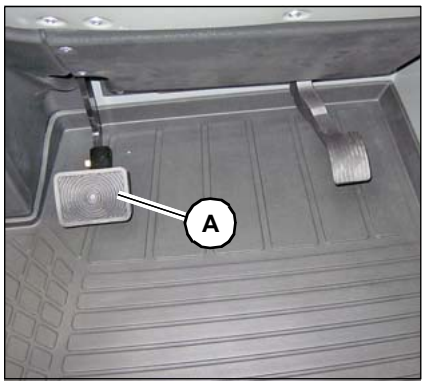

When braking the vehicle with the brake/inching pedal **A**, oil pressure is fed into the hydraulic trailer braking system and the trailer is braked.

The parking brake has no effect on the trailer braking system.

If the travel speed is reduced with the brake/inching pedal **A,** oil pressure is fed into the trailer braking system from a pedal travel of around 20%. This “advance action” slightly brakes the trailer, and the tractor-trailer combination is held in a taut line.

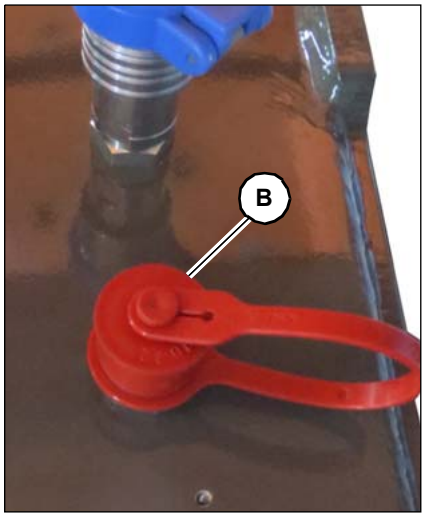

Uncoupling the trailer brake hose:

1. Park the machine and the trailer on level ground.
2. Apply parking brake.
3. Stop the engine.
4. Switch off the starter and remove the starting key.
5. Secure the trailer with wheel chocks.
6. Apply the trailer parking brake.
7. Disconnect the electric and hydraulic connections from the tractor vehicle to the trailer.
8. Close the flat connector plugs on the vehicle **B** as well as the trailer with the protective caps provided.
9. Unhitching the trailer

7 Steering

7.1 Function description: steering system

Steering system oil supply

The hydrostatic steering **IV** is supplied by a fixed displacement pump **001.1**.

Emergency steering function

If the oil supply of hydrostatic steering system **IV** fails because of constant pump **001.1,** by turning the steering wheel, oil will be drawn from the tank line via the non-return valve.

Steering modes

The steering modes are pre-selected with a lever on the steering mode valve **XXVI**.

The following steering modes are available:

1. Front axle steering
2. 4 wheel steering
3. Diagonal steering/crab steering

If diagonal steering is selected, via a switch **S172,** the position to the controller **N004** will be displayed. Via CAN 2, the drive electronics **N001** will receive the command to limit the driving speed to 15 km/h (9.3 mph).

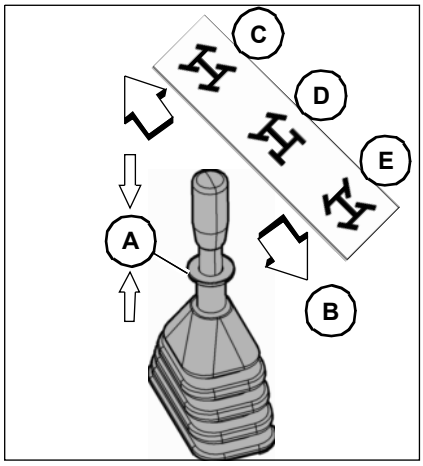

Synchronizing the steering system

Due to internal leakage in the steering hydraulics, the front and rear axle wheels of the machine no longer follow the same track during straight-ahead machine travel after extended operation.

The steering system must be synchronized from time to time.

- C – Diagonal steering/crab steering
- D – Front axle steering
- E – All-wheel steering

WARNING

Accident hazard when synchronising the steering system during machine travel!

Can cause serious injury or death.

► Synchronise the steering system only at a standstill or at walking speed.

Synchronizing with 4 wheel steering (standard)

1. Select a speed range.
2. Select the travel direction with the switch on the control lever .
3. At low travel speed, turn the steering wheel to the **left or right** as far as it will go and try turning it even further in the end position against the pressure for a few seconds.
4. Turn the steering wheel **rapidly** back to straight-ahead position.
   ➥ Perform a test run to check that the front and rear wheels run in the same track.

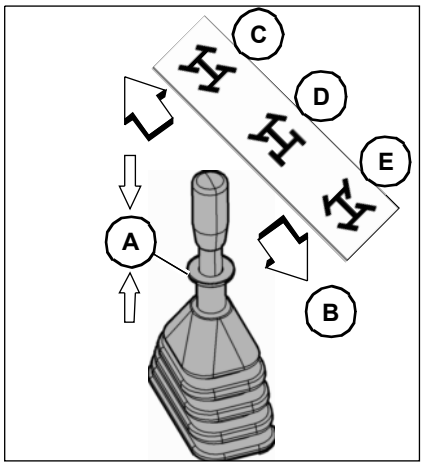

Synchronize the front axle and diagonal steering

Information

Steering synchronization is only possible in the “all- wheel” steering mode!

1. Pull fuse **A** on lever **B** out of the detent.
2. Pull lever **B** backwards into position (**E = all-wheel steering**).
3. Release fuse **A**.
4. Check whether lever **B** is locked into place.

Information

Fuse **A** is spring-loaded. When releasing fuse **A** in lever position **E**, this will lock in independently!

5. Select a speed range.
6. Select the travel direction with the switch on the control lever .
7. At low travel speed, turn the steering wheel to the **left or right** as far as it will go and try turning it even further in the end position against the pressure for a few seconds.
8. Turn the steering wheel **rapidly** back to straight-ahead position.
9. Select the steering mode and perform a test run to check that the wheels on the front and rear axles run in the same track.

Front axle steering

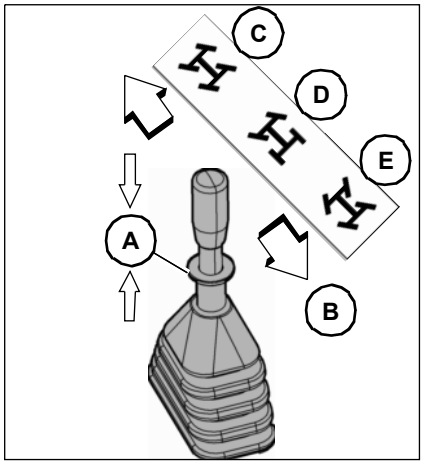

When front axle steering is selected, only the front steering axle is steered. Front axle steering is used for fast transport and road travel.

WARNING

Risk of accidents when changing steering mode during machine travel!

Can cause serious injury or death.

► Change the steering mode only at a standstill or at walking speed.

► See the National Type Approval (Germany) or the Data Confirmation (Germany).

Changing over to front axle steering:

1. Brake the machine to walking speed.
2. Pull fuse ***A*** on lever **B** out of the lock.
3. Pull or push lever**B** into the centre position (**D = front axle steering**).
4. Release fuse **A**.
5. Check whether lever **B** is locked into place.

Information

Fuse **A** is spring-loaded. When releasing fuse **A**into the lever position **D** it will lock independently!

4 wheel steering

When 4 wheel steering is selected (wheels run in the same track), both steering axles have the same steering angle, but in the opposite direction. 4 wheel steering is used for fast loading operations in confined spaces where only small turning circles are possible.

WARNING

Changing over from front axle to 4 wheel steering at high speed (high speed option) causes accident hazard!

Can cause serious injury or death.

► Change the steering mode only at a standstill or at walking speed.

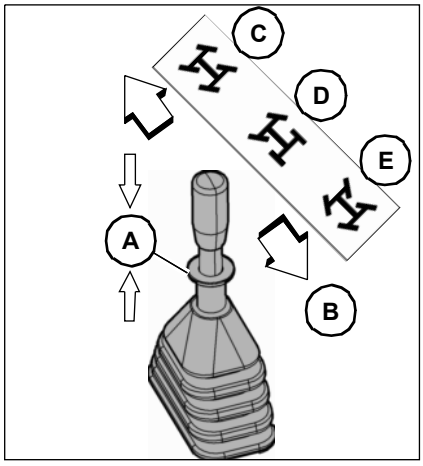

Changing over to 4 wheel steering

1. Brake the machine to walking speed.
2. Pull fuse **A** on lever **B** out of the detent.
3. Pull lever **B** backwards into position (**E = all-wheel steering**).
4. Release lock **S**.
5. Check whether lever **B** is locked into place.

Information

Fuse **A** is spring-loaded. When releasing fuse **A** in lever position **E**, this will lock in independently!

Diagonal steering (crab steering)

When diagonal steering is selected, both steering axles are steered in the same direction. Diagonal steering (also called crab steering) is used for manoeuvring in confined spaces where forward/reverse and sideways machine travel is required at the same time.

Diagonal steering is only allowed during work operation over short distances in the work range.

The driving speed is limited to 15 km/h (9.3 mph).

WARNING

Accident hazard during machine travel on public roads with diagonal steering (crab steering)!

Can cause serious injury or death.

- ► Change the steering mode only at a standstill or at walking speed.
- ► Before machine travel on public roads, change over to front axle steering mode!

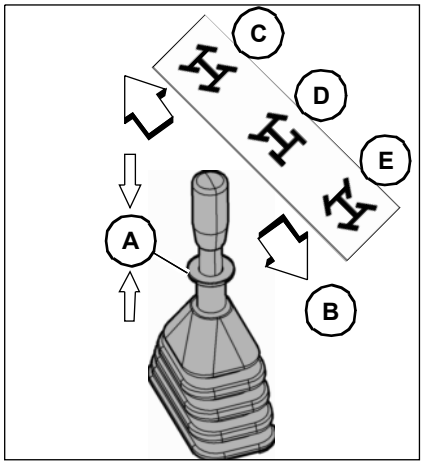

Changing over to diagonal steering:

1. Brake the machine to walking speed.
2. Pull fuse **A** on lever **B** out of the lock.
3. Pull lever **B** forward into position (**C = diagonal steering**).
4. Release fuse **A**.
5. Check whether lever **B** is locked into place.

Information

Fuse **A** is spring-loaded. When releasing fuse **A** in lever position**C**, this will lock in independently!

7.2 Test report: steering

Serial no.	Operating hours	Notes

Hydraulic oil temperature 40°C – 60°C (104°F – 140°F)

Measurement at gear pump

Page	Test features	Note	Specified value	Measured value
7-7	Min. idling speed	Laptop	940–960 min^{-1} (rpm)	
	Max. idling speed	Laptop	2550-2650 min^{-1} (rpm)	
7-7	Steering pressure	At max. engine speed	160–190 bar (2320.6–2755.72 psi)	

Checking the diesel engine speed

Test feature	Note	Remarks	Rated value
Min. idling speed	Diagnosis tool	–	940 – 960 min^{-1} (rpm)
Max. idling speed	Diagnosis tool	–	2550 – 2650 min^{-1} (rpm)

Checking

1. Apply the parking brake.
2. Connect diagnosis tool
3. Start the diesel engine.
4. Read the diesel engine speed using the diagnosis tool.

- Rated idle speed, bottom (idling speed).
- Rated idle speed, top (full throttle).

Steering pressure: checking and adjusting

Test feature	Note	Rated value
Steering pressure	Max. diesel engine speed	160–190 bar (2320.6–2755.72 psi)

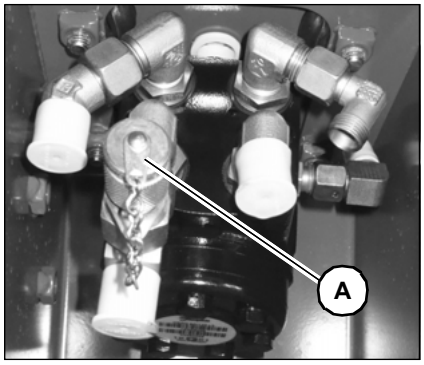

Pos.	Component	Remarks
A	Steering pressure test port	–

1. Connect the pressure gauge to the test connection **A**.
2. Start diesel engine and bring it up to full speed.
3. Turn steering to end stop
   ➥ Read the pressure off the pressure gauge

Steering pressure: how to adjust

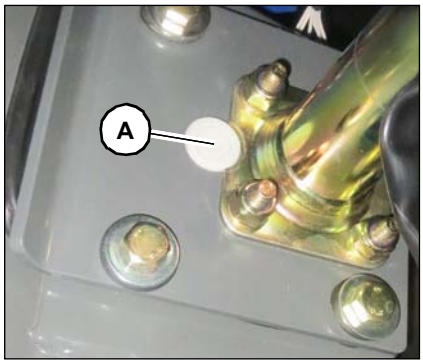

- Remove screwed nose cap **A**.

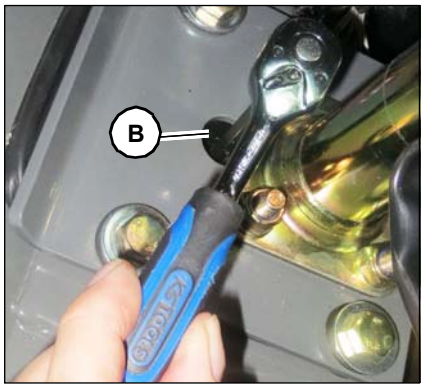

Setting:

- Screw in adjusting screw **B** of the pressure relief valve **023** onto the hydrostatic steering system **IV**.
  ➥ Pressure increase
- Screw out the adjusting screw **B** from the pressure relief valve **023** onto the hydrostatic steering system **IV**.
  ➥ Pressure reduction

7.3 Set steering cylinder

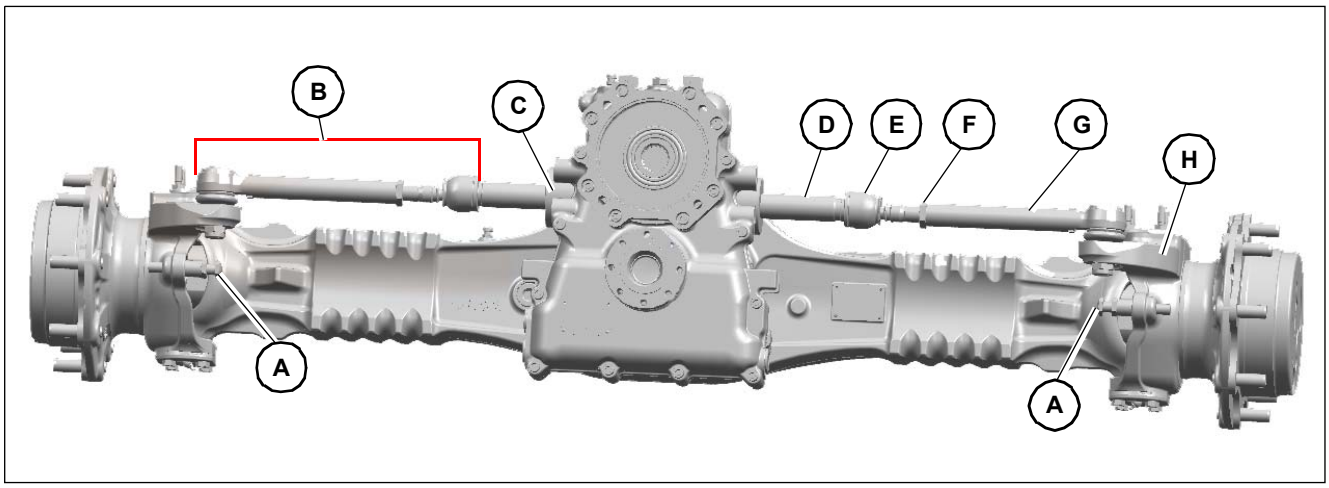

Pos.	Component
A	Steering stop bolt
B	Complete track rod
C	Steering cylinder
D	Piston rod
E	Track rod knuckle
F	Locknut
G	Track-rod end
H	Joint housing

Information

When repairing the steering unit, the steering system must be reset when the parts listed below are replaced.

- After replacing/repairing the track rods **B** or the track-rod ends **G.**
- After exchanging the knuckle housing **H** or the stop screws**A**.
- After repairing the steering cylinder e.g. by exchanging the piston rod **D** or the cylindrical roller.

For sealing work for which the jam nut on the track rod end cannot be loosened, no adjustment of the steering system is required.

Checking and setting the steering unit

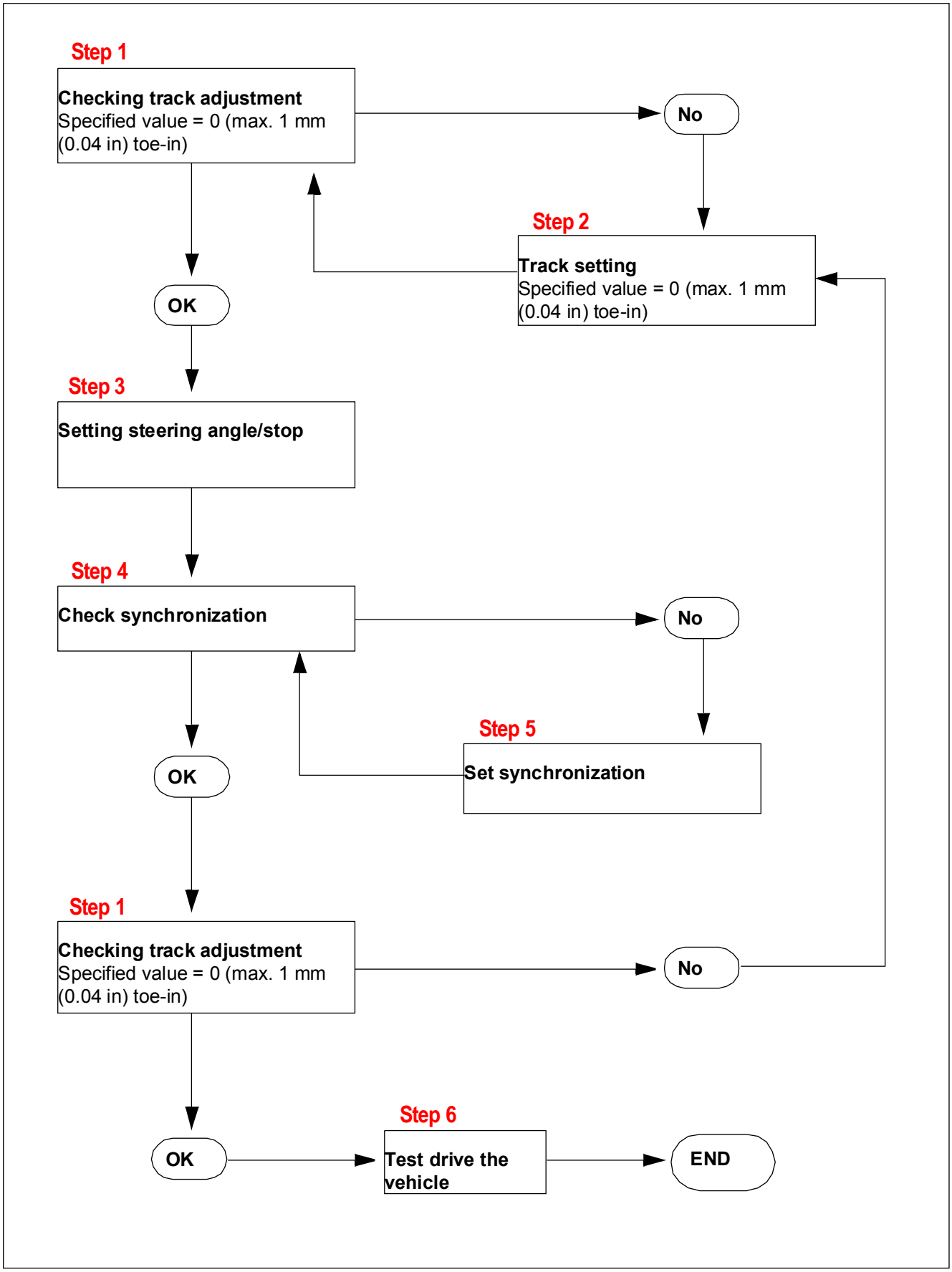

Step 1: check track setting

Check track

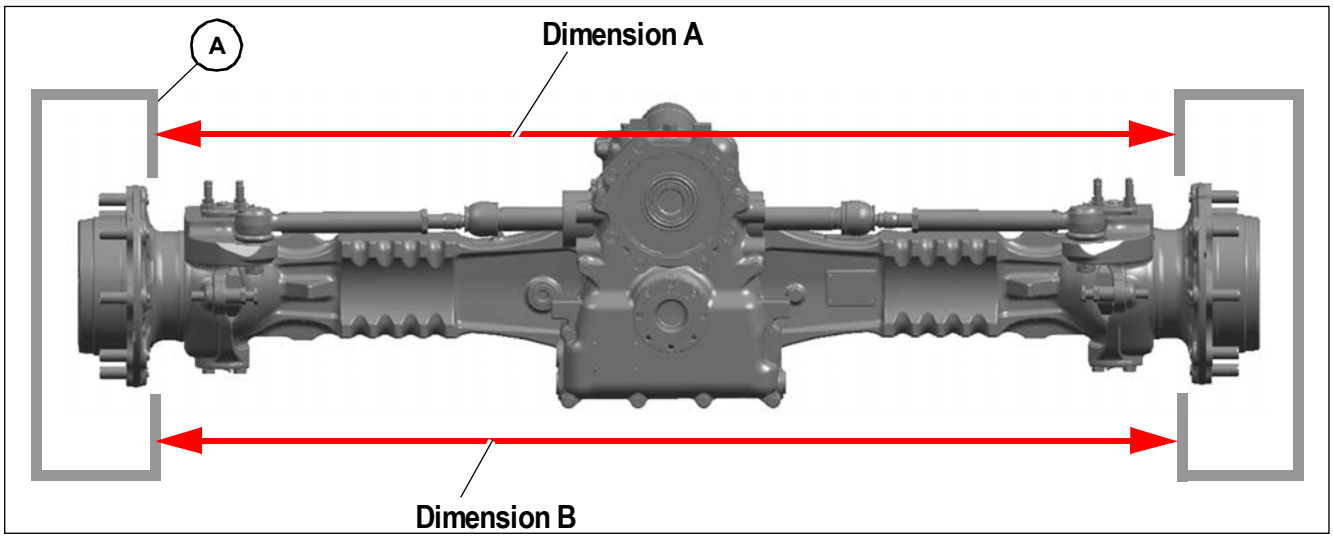

Pos.	Component
A	Inner edge of rim

Check the track settings

Information

Check and set the tracks of front and rear axles separately! The front and rear axle dimensions can differ slightly due to production tolerances.

1. On the inner edge of the rim **A** use a track gauge to determine the distance between clearance **A** and clearance **B**.
   - ➥ The measurement must be done in the centre of the inner edge of the rim **A**.
   - ➥ Clearance **B** minus clearance **A** = 0 mm maximum + 1 mm (0.04 in)

➥ Clearance**A** may be a max of 1 mm (0.04 in) smaller than clearance **B** of the same axle.

Step 2: Track setting

Centre position of the front axle of the steering cylinder

Information

In order to set the track, the steering cylinder must be brought to the centre position. The steering cylinder is not located centrally.

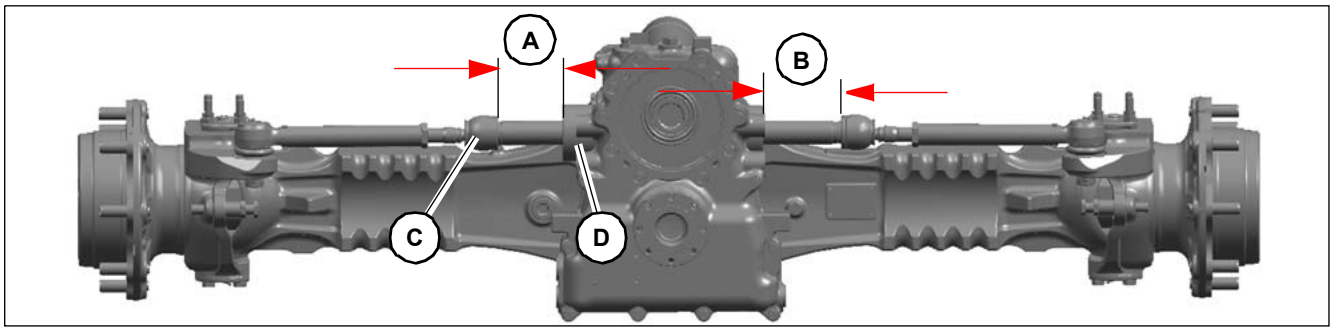

Pos.	Component	Target clearance
A	Distance between track rod knuckle and steering cylinder (in travel direction of left front axle)	102,30 mm (4,03 in)
B	Distance between track rod knuckle and steering cylinder (in travel direction of right front axle)	124,80 mm (4,91 in)
C	Track rod knuckle	–
D	Steering cylinder	–

Centre position of the rear axle of the steering cylinder

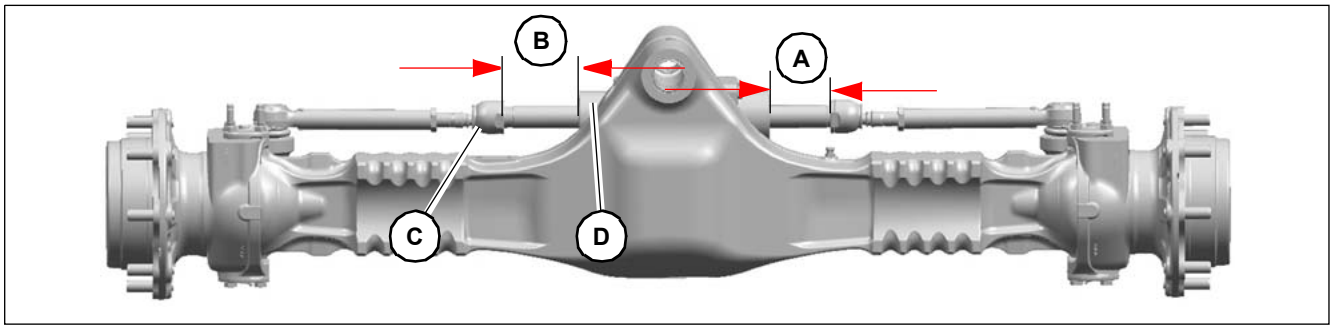

Pos.	Component	Target clearance
A	Distance between track rod knuckle and steering cylinder (in travel direction of right rear axle)	102,30 mm (4,03 in)
B	Distance between track rod knuckle and steering cylinder (in travel direction of left rear axle)	124,80 mm (4,91 in)
C	Track rod knuckle	–
D	Steering cylinder	–

Track setting

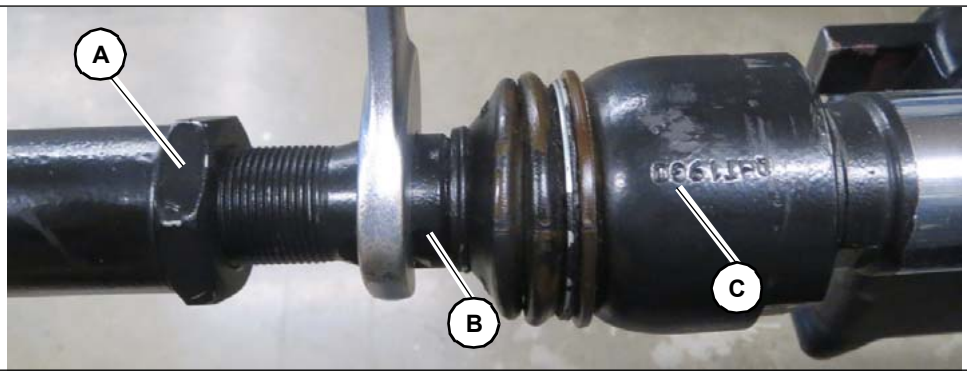

1. Fix steering cylinder with a sleeve
2. Loosen locknut **A**.
3. Slightly and evenly screw in or unscrew threaded rod **B** from the track rod knuckle **C** onto both sides.
4. Check track setting – *see “Step 2: Track setting” on page 7-12*.
5. Repeat this procedure until the track setting corresponds to the specified value.
6. Tighten locknut **A**

Steps 3 and 5: Setting steering stop/angle

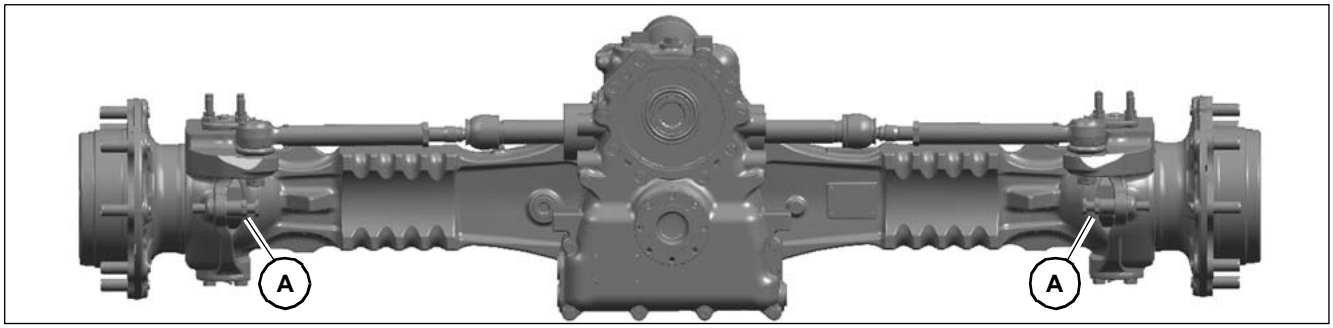

Adjust steering stop

- If the steering system goes out of line during road travel, then check both the steering cylinders and the steering mode valve.
- If the steering system goes out of line when manoeuvring, then adjust the steering again.

1. Jack up the front and rear of the machine securely.
2. Connect a 250 bar (3626 psi) pressure gage to the steering test port fitting.
3. Remove the flexible lines from the rear steering cylinder and connect them together.
4. Slowly and gently turn the steering wheel to the steering stop until the pressure at the limit is approx. 80–120 bar (1160.30–1714.8 psi).

Information

In order to ensure a correct setting, turn the steering wheel slowly and without applying any pressure at the limits!

5. By gradually unscrewing the stop screw **A** , the pressure can be changed from 80 - 120 bar (1160.30–1740.45 psi). The steering pressure should be increased to approx. 140–150 bar (1160.30 – 1740.45 psi).
   ➥ This work step must be performed on the left and right
6. The same adjustment must also be performed on the rear axle.

Set steering angle

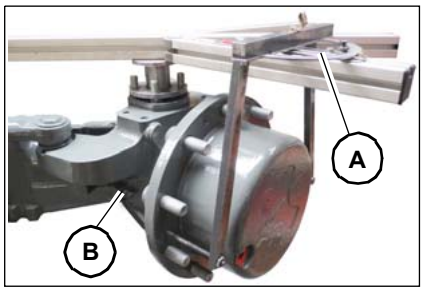

1. Turn steering system
2. Using a protractor, set planetary drive to 40°**A**via the stop screw **B.**

- Both sides must be set.

Step 4: Check steering synchronization

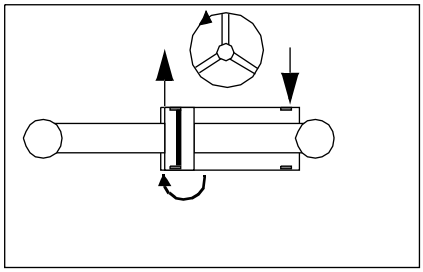

The axles are synchronized by means of a bypass in the final positions of the steering cylinders. In the final position of the piston, oil flows from one side of the cylinder to the other.

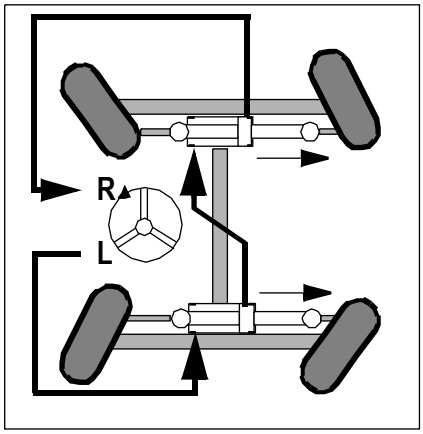

In the axle that reaches the steering limit first, the oil flows through a bypass in the steering cylinder and on to the other side if the wheels do not run synchronously.

If the steering wheel is turned further, the steering cylinder of the other axle moves on as far as it will go. The wheels on the inside curve have the same steering angle in this case. The wheels (or the axles) are hence synchronous.

However, this only works optimally if the bypass position with regard to the left and right of the piston (and with regard to the front and rear axles) is symmetrical in the limit positions.

This is the case if the same resistance can be felt at the steering limits on the left and right when evenly turning the steering wheel at the same speed.

The force required to turn the steering wheel at the limit stops on the left and right must be identical.

The steering rams (or the bypasses) of the front and rear axles must be centred separately as follows to ensure this.

Check the bypasses of the front axle

1. Remove both hose pipes on the steering cylinder of the rear axle and connect them with an intermediate screw connection.

Check the bypasses of the rear axle

Remove both hose pipes on the steering cylinder of the front axle and connect them with an intermediate screw connection.

Information

Ensure that there is no air in the steering circuit otherwise synchronisation cannot be checked or set correctly!

7.4 Steering system control

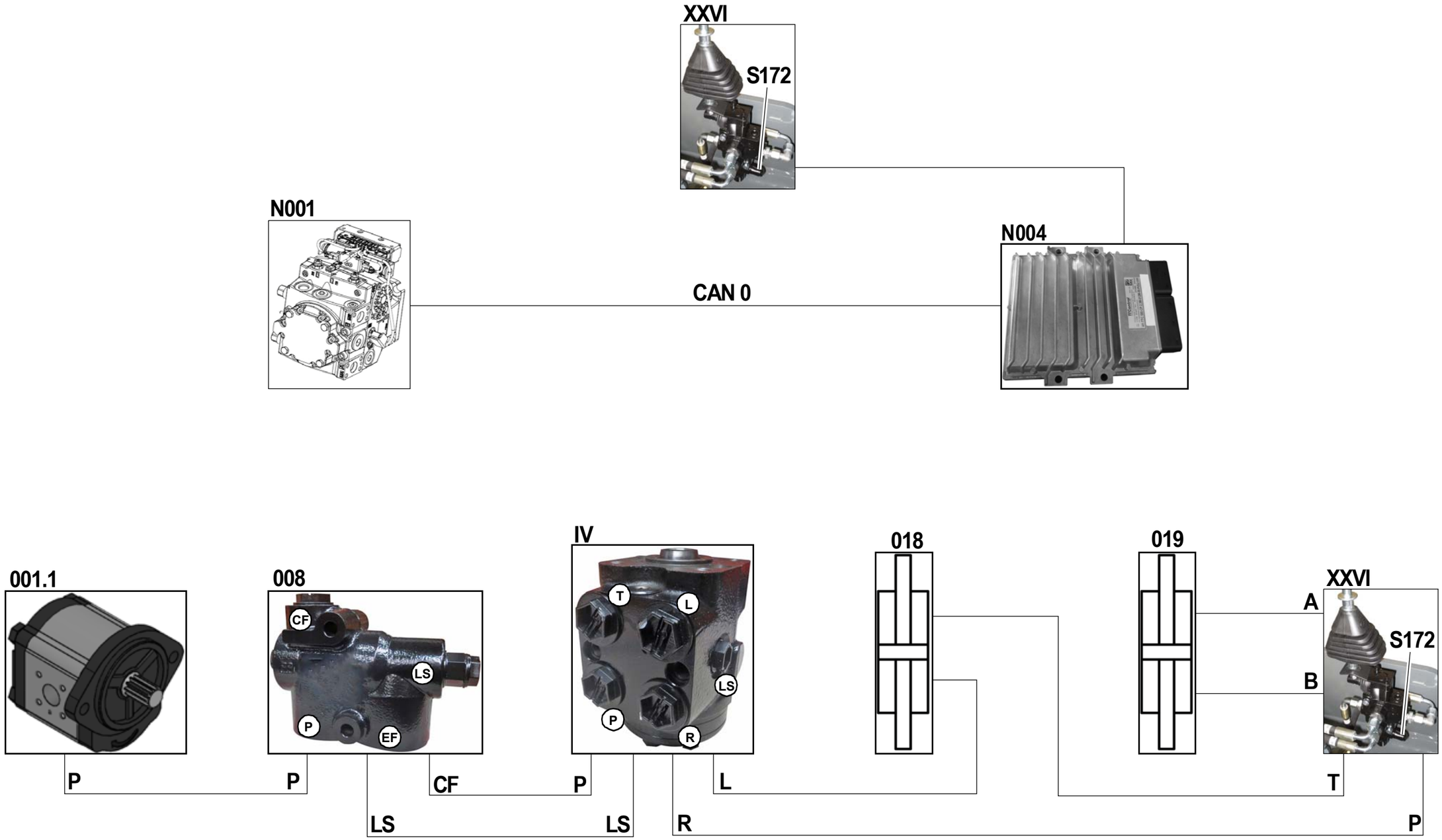

Description of steering system

Hydraulic components

Pos.	Component	Remarks
IV	Steering system	OSPD 60/200 DN
XXVI	Steering mode valve	–
001.1	Fixed displacement pump of steering system	36 ccm/U (2.196 in³)
008	Priority valve	–
018	Front axle steering cylinder	–
019	Rear axle steering cylinder	–

Electrical components

Pos.	Component	Remarks
N001	Drive electronics	H1 AC control
N004	Controller N004	TTC580-CB
S172	Steering mode lever limit switch (crab steering)	–

Pos.	Component	Designation
CAN1	CAN1 – Work hydraulics	–
CAN0	CAN0 – Drive	–

7.5 Description of steering components

Pos.	Component	Remarks
IV	Steering system	OSPD 60/200 DN
XXVI	Steering mode valve	–
001.1	Fixed displacement pump of steering system	36 ccm/U (2.196 in³)
008	Priority valve	–
018	Front axle steering cylinder	–
019	Rear axle steering cylinder	–

7.6 Steering system components

Gear pump 001.1

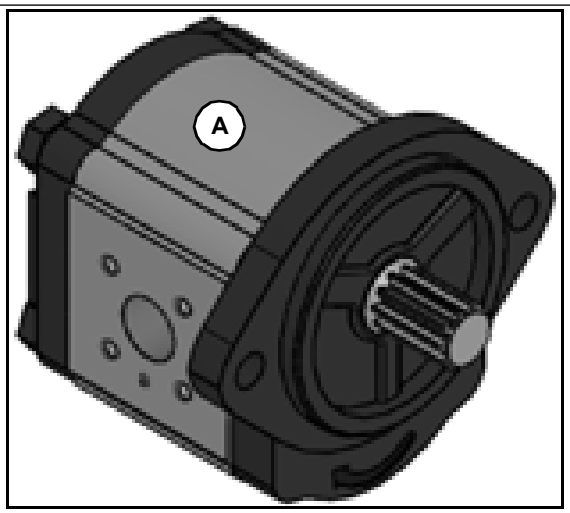

Pos.	Remarks	System pressure
A	36 ccm/U (2.196 in³)	160 – 190 bar (2320.6 – 2755.72 psi)

Function description

The oil supply to the work hydraulics and the steering system is governed by the gear pump **A.**

Hydrostatic steering IV

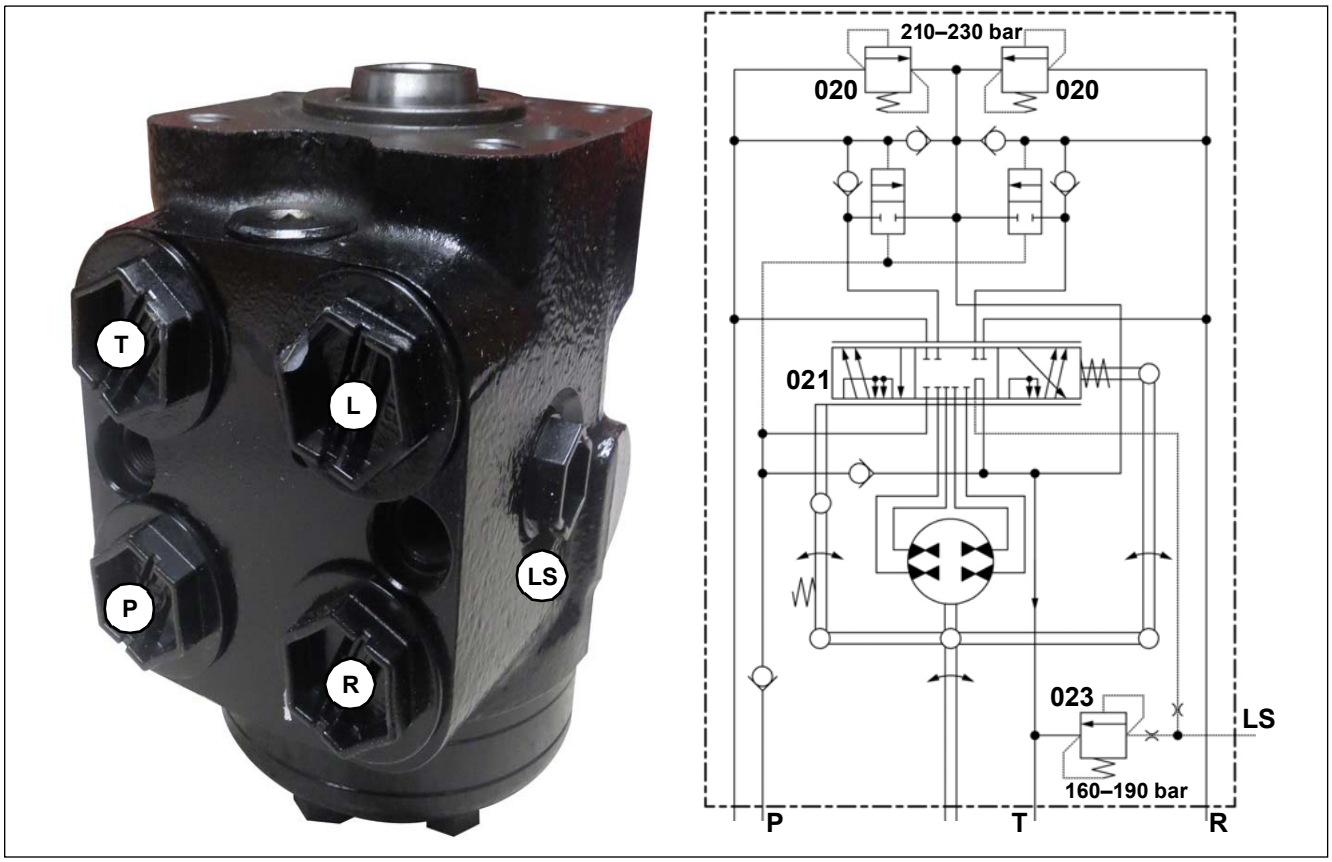

Connection	Power supply
P	Gear pump input **001.1**
T	Output to tank **XX**
R	Steering mode valve output **XXVI** Connection **P**
L	Steering cylinder output Left front axle connection

Component	Function	Measured value
020	Secondary pressure-limiting valve	210 – 230 bar (2755.72–3335.87 psi)
021	Rotary spool valve	–
022	Adding valve	–
023	Primary pressure-limiting valve	160 – 190 bar (2320.6 – 2755.72 psi)
024	Non-return valve	–

Function description

Steering orbitrol **IV** serves the purpose of passing on the steering movement executed at the steering wheel to the steering cylinder and thus to complete the steering movement. In normal operation the steering orbitrol **IV** is supplied with oil by the gear pump **001.1**. If this oil supply fails, the steering orbitrol **IV** can also function as a pump in an emergency.

Function

If a movement is executed to one side at the steering wheel, the rotary spool valve **021** in the steering orbitrol **IV** is deflected. As a result of this, oil from the gear pump **001.1** reaches the metering units via the connection **P** on the steering orbitrol **IV** via the rotary valve **021**. The oil can now flow to the steering cylinder via the rotary valve **021** at connection **L** or **R**. Via the other connection (**L** or **R**), the returning oil can be discharged via the rotary valve**021** to the connection **T** (Tank). The flowing through of the dosing unit causes the rotary spool valve **021** to be moved back into a neutral position. As soon as the neutral position of the rotary spool valve **021** has been reached, it is closed again and the steering movement comes to a stop. If the steering wheel is moved in the opposite direction, a steering movement in the opposite direction is executed.

If the rotary spool valve **021** is in neutral position, no steering movement is executed. The oil from the gear pump **001.1** is in neutral circulation and flows via the connection **P** through the rotary valve **021** to the connection **T** (Tank **XX**).

When the steering orbitrol IV is supplied oil, then valve **022** can switch. This enables both dosing units to be connected to each other which leads to faster steering movements. The pressure-limiting valve **023** is to relieve the supply pressure in the steering orbitrol **IV**. The pressure-limiting valves **020** serve as a secondary protection of the steering cylinders **018** or **019**. It high external forces are exerted on steering cylinder **018** or **019** pressure is relieved on the opposite side.

Emergency function

If the steering system is not supplied with oil (diesel engine is not running), valve **022** in the steering orbitrol **IV** is not switched. In this even only one dosing unit is available. Turning the steering wheel causes it to function like a pump. The steering movement at the steering wheel causes the oil to be pumped via the rotary valve **021** from one connection (**L** or **R**).

In this case, the oil no longer flows from the gear pump**001.1** to the tank **XX**, but is rather pumped back and forth via a non-return valve between (connection **L** and **R**). A return flow to gear pump **001.1** is prevented by the non-return valve **024**. Potential feeding from the tank takes place via connection **T** directly from the tank **XX**.

Steering mode valve XXVI

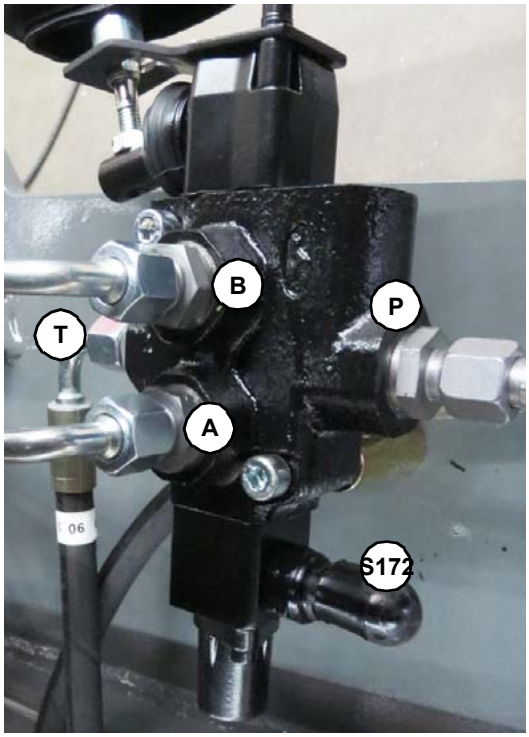

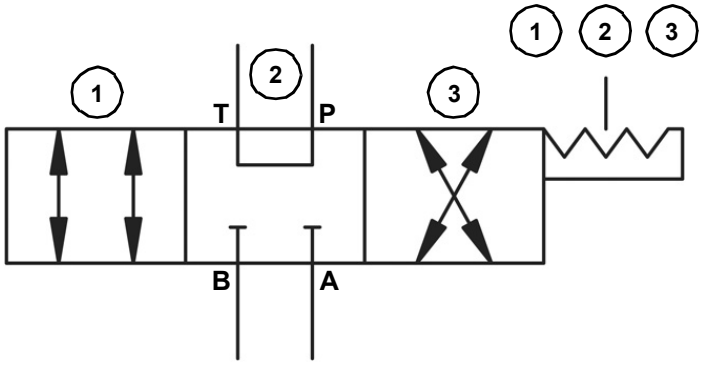

Connection	Power supply
A	Output to rear axle steering cylinder in right travel direction
B	Output to rear axle steering cylinder in left travel direction
P	Input from hydrostatic steering system **IV** connection R
T	Output to tank **XX**

Position	Function
1	Crab steering
2	Front-axle steering
3	4 wheel steering

Pos.	Component	Remarks
S172	Monitoring micro-switch: in crab steering mode, the speed is limited to 15 km/h (9.3 mph)	–

Function description

The steering mode valve **XXVI** is designed to switch between the different steering modes: all-wheel steering, front axle steering, and crab steering. The switch-over is done via a lever.

Function

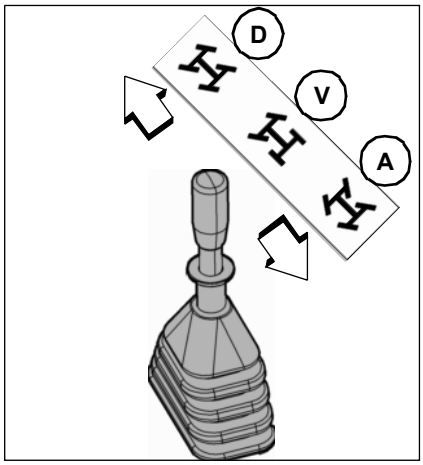

Steering mode lever in the centre position (V) (front axle steering)

If the steering mode lever is in the centre **V**, from the hydrostatic steering system **IV** the connection **R** is connected with the connection **P** at the steering mode valve **XXVI**. The oil is led to the steering cylinder of the front axle in the right cylinder chamber via connection **T**. The oil is carried from the left cylinder chamber to the hydrostatic steering system **IV** The connection**L**

The steering cylinder of the rear axle is locked on the connections **A** and **B**.

In front axle steering, the following speeds are possible:

1. Snail up to 7 km/h (4.3 mph)
1. Turtle up to 15 km/h (9.3 mph)
3. Hare 20 km/h (12.4 mph) or for sprinters up to 30 km/h (18.6 mph).

Steering mode lever set forward to (D) (crab steering)

If the steering mode lever is in the position **V**, from the hydrostatic steering system **IV** the connection **R** is connected with the connection **P** at the steering mode valve **XXVI**. The oil is led to the steering cylinder of the rear axle in the left cylinder chamber via connection **B**. The oil displaced from the right cylinder chamber from the rear steering cylinder reaches steering mode valve **XXVI** at the connection **A**. It is now transferred to the steering cylinder on the cylinder chamber of the right front axle via connection **T**. The oil on the left cylinder chamber reaches the hydrostatic steering system **IV** on connection **L**.

In crab steering, the following speeds are possible:

1. Snail up to 7 km/h (4.3 mph)
1. Turtle up to 15 km/h (9.3 mph)
3. Hare up to 15 km/h (9.3 mph)

Steering mode lever moved backwards to (A) (all-wheel steering)

If the steering mode lever is in the position **A**, from the hydrostatic steering system **IV** the connection **R** is connected with the connection **P** at the steering mode valve **XXVI**. The oil is led to the steering cylinder of the rear axle in the right cylinder chamber via connection **A**. The oil displaced from the left cylinder chamber from the rear steering cylinder reaches steering mode valve **XXVI** at the connection **B**. It is now transferred to the steering cylinder on the cylinder chamber of the right front axle via connection **T**. The oil on the left cylinder chamber reaches the hydrostatic steering system **IV** to connection **L**.

In crab steering, the following speeds are possible:

1. Snail up to 7 km/h (4.3 mph)
1. Turtle up to 15 km/h (9.3 mph)
3. Hare 20 km/h (12.4 mph) or for sprinters up to 30 km/h (18.6 mph).

Priority valve 008

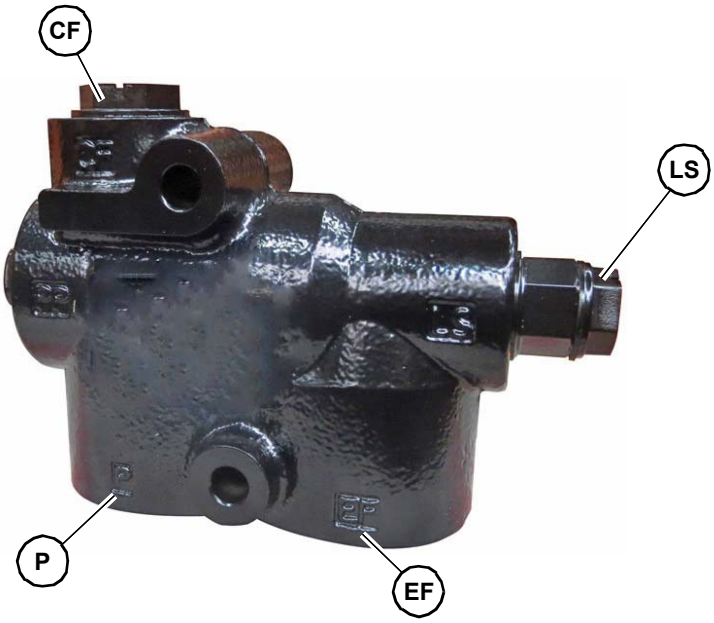

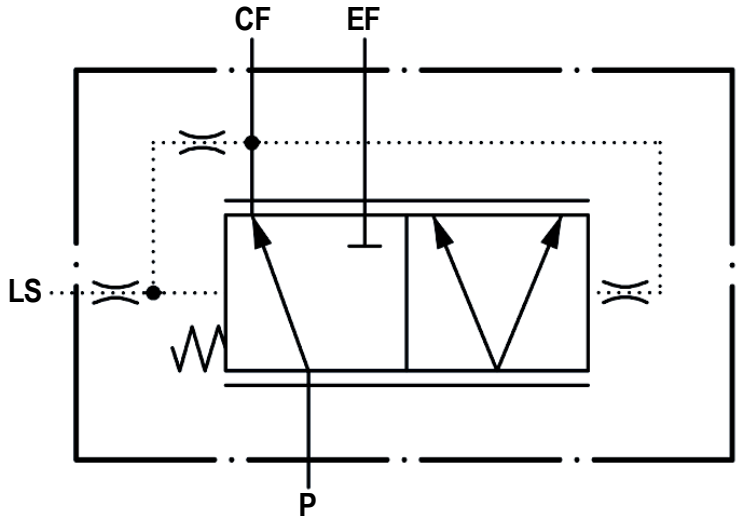

Connection	Power supply
P	Input from gear pump, working hydraulics **I**
LS	Input from steering orbitrol **IV**, port **LS**
CF	Output to steering orbitrol **IV**, port **P**
EF	Output to main control unit **XIII**, port **P1**

Function description

The priority valve **008** has the task of preferentially supplying the steering system with oil.

Function

The oil flow coming from the gear pump **I** passes through port **P** and an internal duct of the priority valve **008** to the control spool. The control spool is then pushed against the spring via the area ratio and the oil flow is distributed evenly between the steering orbitrol **IV** and the main control unit **XIII**..

As soon as the steering orbitrol **IV** is actuated it generates an LS signal, which acts on the control spool of the priority valve **008**. Through the combination of the spring force and the LS signal the control spool is pushed back towards the initial position and the steering assumes priority. This can mean that functions of the working hydraulics are executed more slowly during steering.

Steering cylinder in centre position

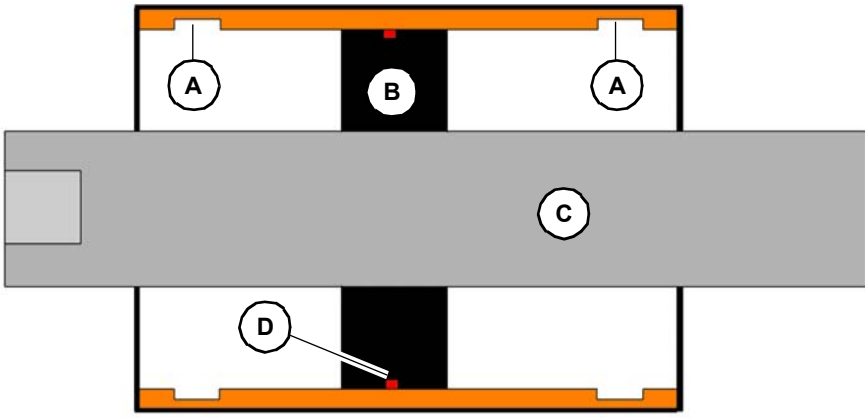

Position	Component
A	Left and right groove in the cylindrical tube
B	Piston on the piston rod
C	Piston rod
D	Piston rod seal

Steering cylinder in the steering stop (synchronisation)

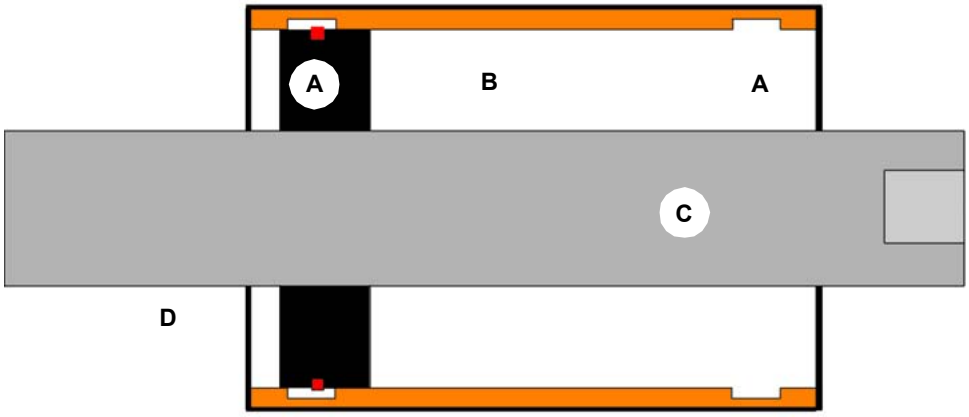

Position	Component
A	Groove in left and right cylindrical tube
B	Piston on the piston rod
C	Piston rod
D	Piston rod seal

Functional description

Steering cylinder **018/019** is a rod cylinder with one piston. The piston is fixed to the piston rod. The power transmission and the speed of the piston rod are the same on both sides.

In the steering cylinders, the synchronisation is done via bypass.

At the end of the respective steering cylinder, a groove is milled into the cylindrical tube on the left and right side. If the steering system is rotate to the steering lock, the piston sealing ring enters the groove This means that the oil from the loaded side flows into the de-pressurized cylinder chamber. As a result, the oil is led to the second steering cylinder until this is also at the steering stop. If both are on the steering stop, the steering system is synchronised, and the oil is used for steering. This is clearly noticeable because the steering wheel in the end lock is easy to turn.

If you would like to check the cylinder for internal leakage, make sure that the steering cylinder is not in the end position.

Limit switch for crab steering S0172

Pos.	Component
A	Limit switch for crab steering on the steering mode valve XXVI

PIN	Connection	to PIN	Measuring range	
			not actuated	Actuated
1	Output from controller N004	XE04 (2 - 38)	Ground	Ground
2	Input to the controller N004	XE15 (1 - 28)	10 V	12 V

Function description

In order to be able to register the crab steering mode, the crab steering limit switch **S172** is installed. For safety reasons, the driving speed is reduced to 15 km/h (9.3 mph) when crab steering is switched on.

8 Hydraulics

8.1 Functional characteristics

Gear pump working hydraulics I

The gear pump for working hydraulics **I** supplies the steering orbitrol **IV** and the main control unit **XIII** with oil via the priority valve **008**. The oil flow is filtered by a high-pressure filter **167**directly after the gear pump **I**.

Priority valve 008

The priority valve **008** is responsible for dividing the oil flow from the gear pump work hydraulics **I into** the steering system and work hydraulics. Here, the oil is primarily supplied to the steering system **IV**.

Hydraulic control unit XIII

The hydraulic control unit **XIII** is a 4–5-fold block with pressure compensator (closed system). Sections 1–4 are provided with a shock (secondary valves). The LS-pressure is protected by pressure relief valve **074**, which limits the system pressure. The sections are controlled via proportional valves.

Additional control valve

The additional control valve is a 2-fold block in the rear of the vehicle for PTO and rear hitch. Section 1 does not have secondary protection.

Pilot control

The boost pressure pump **001** supplies different functions:

- Controlling the proportional valves in the hydraulic control unit **XIII**
- Opening the hose burst valve **XV**
- Pilot block, solenoid valves **XII**
- Opening the lock ram **093** autohitch
- Switch on differential lock **Y009**
- Trailer brake valve **Y113**
- Additional control block of rear hitch and PTO

The oil pumped by the boost pump **001** creates a boost pressure against the boost pressure limiting valve **037**. Depending on the spring setting in the boost pressure limiting valve **037**, the oil flow is prestressed and after reaching the set pressure it is released to the hydraulic oil tank. The boost pressure valve **037** is adjustable and must be set whenever the variable displacement pump **VII** is replaced.

Hydraulic function, boom

In order to be able to use the work hydraulics, switch **S085** for the road travel lock must be switched on and the driver must be sitting in the seat.

When the driver gets out of the seat, the hydraulic functions stop

- Raise - lower
- Tilt in - tilt out
- Retract - extend
- Lock - unlock

The additional functions can still be used if they have been switched on beforehand (driver sitting in the seat)

There are three settings for controlling the telescopic arm. These can be selected by the switch **S125**.

- Bucket mode
- Forklift mode
- Manual mode

Raising and lowering

Electrical control

Using the joystick **D002** a CAN message is transmitted to the controller **N004**. The proportional valve for raising **Y066** and lowering **067** is controlled by a tube characteristic. The raising and lowering movements are monitored by a lifting arm angle sensor **R023**. The lifting arm angle sensor **R023** is required for the various settings (modes) of the telescopic arm movements.

Hydraulic control

The lifting cylinder **085** is controlled by section A3/B3 of the hydraulic control unit **XIII**. The lowering function is secured via the hose burst valve **XIV**. Pressure relief is provided by the shock extraction **069** (secondary valves) in the hydraulic control unit **XIII** of the tilt circuit.

Emergency lowering

If the diesel engine fails, it must be possible to lower the telescopic arm By holding touch button **S040**and pushing the joystick **D002** forward, the lowering proportional valve **067** is energized. The telescopic arm lowers from its own dead weight.

The operating time of touch button **S040** is limited to 3 – 60 s. After this, touch button **S040** must be pressed again in order to activate the function. This procedure can be performed only 3 times.

The emergency lowering is only permissible:

1. Ignition switched on
2. The operator’s seat is occupied
3. No diesel engine speed

Overload situation

When the overload limit is reached (input through overload warning device), the function is discontinued. A message will appear in the display. This is accompanied by a warning tone.

The telescopic arm will be brought to a standstill via a soft stop.

Limit switch S116

If the telescopic arm reaches the end position (telescopic arm completely retracted), the lowering speed of the individual modes will be released. If the limit switch **S116** recognizes the end position during retraction, the function is attenuated.

Hydraulic function shut down touch button S084

By pressing the hydraulic function shut-down touch button **S084**, the activities automatically initiated by the overload warning device will be switched off.

The following functions will be cancelled:

1. Automatic retraction
2. The overload warning indicator goes out and the red LED of the overload warning indicator turns on.
3. The telescopic arm can be extended.

The hydraulic function shut down touch button **S084** is limited to 30 s. It can only be pressed again after 5 s.

Bucket mode

When lowering the telescopic arm, the retract telescopic arm function is proportionally faster than the lowering speed.

In the case of an overload, the following actions will be automatically initiated:

1. The extension will be gently stopped.
2. Automatic retraction
3. The lowering movement will remain active.

In the case of an error, the bucket mode is always active.

Forklift mode

In stacking mode, the telescopic arm moves in a vertical line when it is lowered or raised. The telescopic arms will automatically retract/extend in relation to raising/lowering so that the load will always move vertically.

The lowering speed of the loader unit is automatically reduced depending on load and angle. This means that in the upper range, the lowering speed is slow. In the lower range, the lowering becomes faster.

When using the hydraulic function shut down touch button **S084**, the retraction of the telescopic arm is stopped.

Manual mode

The loader unit is not operated automatically in manual mode, Smart Handling is active in the background and only intervenes in case of overload. The loader unit moves downward in an arc during lowering. In an overload situation, the hydraulics will automatically switch off i.e. the lowering movement will be gently stopped. There is no automatic retraction of the telescopic arm. The extension is blocked.

Lock for long-haul travel circuit breaker S085

If the lock for long-haul travel circuit breaker **S085** is active, the following function cannot be used:

1. Raise/lower telescopic arm
2. Telescopic arm for emptying/filling shovel
3. Telescopic arm for emptying shovel Retract
4. Lock/unlock 3rd control circuit
5. Continuous operation of 3rd control circuit
6. Additional control circuit for tipping trailer
7. 14-pole front socket
8. 7-pole front socket

Load stabiliser XIV

The load stabiliser can be switched of via the touch button **S044** in either continuous or automatic function. The load stabiliser is used to damp the boom in order to ensure smooth handling even at high speeds. If the function is active, the touch button **S044** lights up.

Continuous function is switched on

With the touch button **S044** on the keypad **D004** a CAN message (CAN1) is sent to controller**N004**. From controller **N004** the solenoids **Y020** and **Y021** are energized with 12 V.

The PIN 1-77 outlet on the controller **N004**energizes the solenoid **Y020** (2)

The PIN 1-56 outlet on the controller **N004**energizes the solenoid **Y021** (2)

Automatic function

The load stabiliser is activated from a speed of 7 km/h.

The signal from the speed sensor **B009** is sent from the traction electronics **N001** to the controller **N004** via CAN 2. From 7 km/h (4.3 mph), solenoids **Y020** and **Y021**are supplied with 12 V by the controller **N004**.

The PIN 1-77 outlet on the controller **N004**energizes the solenoid **Y020** (2)

The PIN 1-56 outlet on the controller **N004**energizes the solenoid **Y021** (2)

Switching off of the load stabiliser when the bucket is completely tipped.

If the tilt ram **087** is right up to the stop, pressure is built up in the tilt ram's pressure hose **087** (tilt in).
When a pressure of 150 bar (2175.57 psi) has been reached, push button switch **S045** interrupts the 12 V electric power supply to controller **N004** on PIN 1-36. Solenoids **Y020** and **Y021** are de-energized in order to automatically switch off the load stabiliser.

This is necessary because the tilt ram **087** and the compensation cylinder **086** are hydraulically connected. Tilt ram **087** (bottom side) with compensation cylinder **086** (bottom side) and the two rod sides of the cylinder. When tilting in, right up to the stop, pressure is built up in the pressure hose (bottom side), which impacts the bottom side of the compensation cylinder **086**.
When the load stabiliser is switched on, the rod side of the lifting cylinder **085** is de-pressurised and connected to the tank, which enables the compensation cylinder **086** to raise the boom.

Via the valve block **XIV** (load stabiliser) the lifting cylinder **085** is connected to a pressure accumulator **080**. When the load stabiliser is switched on, the two solenoid valves **Y020** and **Y021** are energised. The solenoid valve **Y020** connects the rod side of the lifting cylinder **085** with the tank. The solenoid valve **Y021** connects the floor side of lifting cylinder **085** with pressure accumulator **080**. The pressure reservoir **080** is regulated to 280 bar (4016.06 psi) by a pressure relief valve.

Dump out and tilt in

Electrical control

Using the joystick **D002** a CAN message is transmitted to the controller **N004**. The proportional valve for tilting in **Y068** and dumping out **069** is controlled via a characteristic curve.

Hydraulic control

The tilt ram **088** is controlled by section A4/B4 of the hydraulic control unit **XIII**. The tilt-in function is secured via the hose burst valve **088**. The pressure is relieved by the fill shovel **070.1** and empty shovel **070.2** shock cavitation (secondary protection) in the hydraulic control unit **XIII** from the dumping circuit.

Tilt ram lock

With touch button**S047**in the keypad, the fill/empty shovel functions are blocked. The proportional valves for fill shovel **Y068** and empty shovel **069** are no longer energized. If the function is activated, the LED in touch button**S047**will light up

Bucket repositioning

Bucket repositioning is an option that can be used to set a specific position for the tilt ram **087**. This often makes work cycles easier that are frequently repeated. As soon as touch button **S092** on the joystick is pressed, the tipping cylinder **087** returns to the previously saved position. In order to save a position, the tilt ram **087** has to be moved into the desired position. Hold touch button **S092**on the joystick for approx. 3 s until you hear a short acoustic signal and the control lamp **H083** illuminates. The position of tilt ram **087** is now saved.

The saved position is deleted as soon as the ignition is switched off.

Electrical control

If touch button **S092** on the joystick **D002** is pressed, a CAN message is transmitted to controller **N004**. The proportional valves for tilting in **Y068** and dumping out **Y069** are controlled via a characteristic curve. The characteristic curve is influenced in relation to the position pickup **B028** (bucket repositioning automatics). Sensor **B028**transmits the values to controller **N004**.

Hydraulic control

The tilt ram **087** is controlled by section A4/B4 of the hydraulic control unit **XIII**. The tilt-in function is secured via the hose burst valve **088**. The pressure is relieved by the fill shovel **070.1** and empty shovel **070.2** shock cavitation (secondary protection) in the hydraulic control unit **XIII** from the dumping circuit.

3rd control circuit

Electrical control

If rocker **R013** (lock/unlock) on the joystick **D002** is actuated, a CAN message is transmitted to controller **N004**. The proportional valves for locking **Y016** and unlocking **Y017** are control via a characteristic curve.

Hydraulic control

The locking cylinder **091** is controlled by section A1/B1 of the hydraulic control unit **XIII**. The unlocking function is secured by the quick hitch system solenoid valve **Y025.** Pressure relief is provided by the shock extraction **072** (secondary valves) in the hydraulic control unit **XIII**.

Quickhitch lock 117

In order to be able to open locking cylinder **091** (Y025), touch button **S040** and the roller on the joystick **D002** must be actuated simultaneously.

Bleed valve 134

With touch button **S127**, the pressure in the third control circuit on the telescopic arm is reduced via relief valve **134** (Y106)**.**

3rd control circuit, changeover valve 133

Electrical control

An additional circuit can be activated via the 3rd control circuit changeover valve **133**. If the reversing valve touch button **S110** on the joystick **D002** is pressed, a CAN message is transmitted to controller**N004.** The reversing valve solenoid valve **Y051** is energized.

Hydraulic control

Via the valve block **133** the 3rd control circuit is switched to an additional circuit from locking cylinder **091**. The function is switched via the reversing valve solenoid valve **Y051.** Pressure relief is provided by the shock extraction **072** (secondary valves) in the hydraulic control unit **XIII**.

Rear additional control circuit

The rear additional circuit can be designed as follows:

1. Only tipper
   - ➥ Raise tipper **Y044** and lower tipper **Y045**
2. Only hitch
   - ➥ Raise hitch **Y044** and lower hitch **Y045**
   - ➥ Unlocking valve **Y047** for auto hitch locking cylinder **093**.
3. Tipper and hitch
   - ➥ Raise hitch **Y044** and lower hitch **Y045**
   - ➥ Unlocking valve **Y047** for auto hitch locking cylinder **093**
   - ➥ Lower tipper additional valve **Y116**
4. Tipper and fourth control circuit in the rear
   - ➥ Raise tipper **Y044** and lower tipper **Y045**
   - ➥ Tipper auto hitch reversing valve **Y046**
5. Tipper, fourth control circuit (rear), and auto hitch
   - ➥ Raise hitch **Y044** and lower hitch **Y045**
   - ➥ Unlocking valve **Y047** for auto hitch locking cylinder **093**
   - ➥ Lower tipper additional valve **Y116**
   - ➥ Tipper auto hitch reversing valve **Y046**

Triangle rear hitch

A triangle rear hitch is attached to the rear of the telehandler for raising, lowering, and pulling attachments in floating position. Control via an additional control units in the rear of the telehandler. The function can only be used if the operator is in the seat. By unlocking with the switch **S184** the rear hitch control lever **B105** is released.

The individual valves are controlled via the operator's controls:

1. Rear hitch control lever **B105**
   - ➥ Rear hitch proportional valve for raising **Y117** and lowering **Y118**
2. Rear hitch circuit breaker **S183**
   - ➥ Lower with floating position rear hitch solenoid valve **Y129**
3. Lower rear hitch via rear operation
   - ➥ Lower rear hitch proportional valve **Y118**
4. Operation with the rear touch controls for raising/lowering
   - ➥ Touch button **S159** Raise
   - ➥ Touch button **S160** lower

Rear lifting mechanism load pressure sensor B102

If the rear hitch is overloaded (e.g. by an extended telescopic arm), all hydraulic and drive functions except for the retraction of the telescopic arm will be switched off. A corresponding flashing warning symbol will be displayed on the main page of the display unit. The telescopic arm must be completely retracted by the operator. Only when the limit switch **S116** responds are all hydraulic and drive functions released.

Rear lifting mechanism load pressure sensor B102

If the rear hitch is overloaded (e.g. by an extended telescopic arm), all hydraulic and drive functions except for the retraction of the telescopic arm will be switched off. A corresponding flashing warning symbol will be displayed on the main page of the display unit. The telescopic arm must be completely retracted by the operator. Only when the limit switch **S116** responds are all hydraulic and drive functions released.

PTO shaft

The PTO is only available in combination with the rear hitch.

The PTO is located in the rear of the vehicle. The speed is 540 rpm for a diesel engine speed of
1900 rpm. By unlocking with switch **S184**, the PTO is released. The operator must be sitting in the seat. The control can be switched on and off in each driving area and for each diesel engine speed via touch button **S143**. The PTO is also possible when the lock for long-haul travel **S085** is switched on. The PTO speed is monitored via a speed sensor **B104**.

Operation on the rear of the telehandler with touch button S175

1. The operation is always possible and has priority over the operation in the cab.
2. If touch button **S175** is pressed for longer than 25 s, the function is deactivated. Afterwards, a renewed activation is possible.
3. If the diesel engine is restarted and touch button **S175** is pressed at the same time, the function is only possible after 10 s.

8.2 Work hydraulics components

Hydraulic control unit XIII

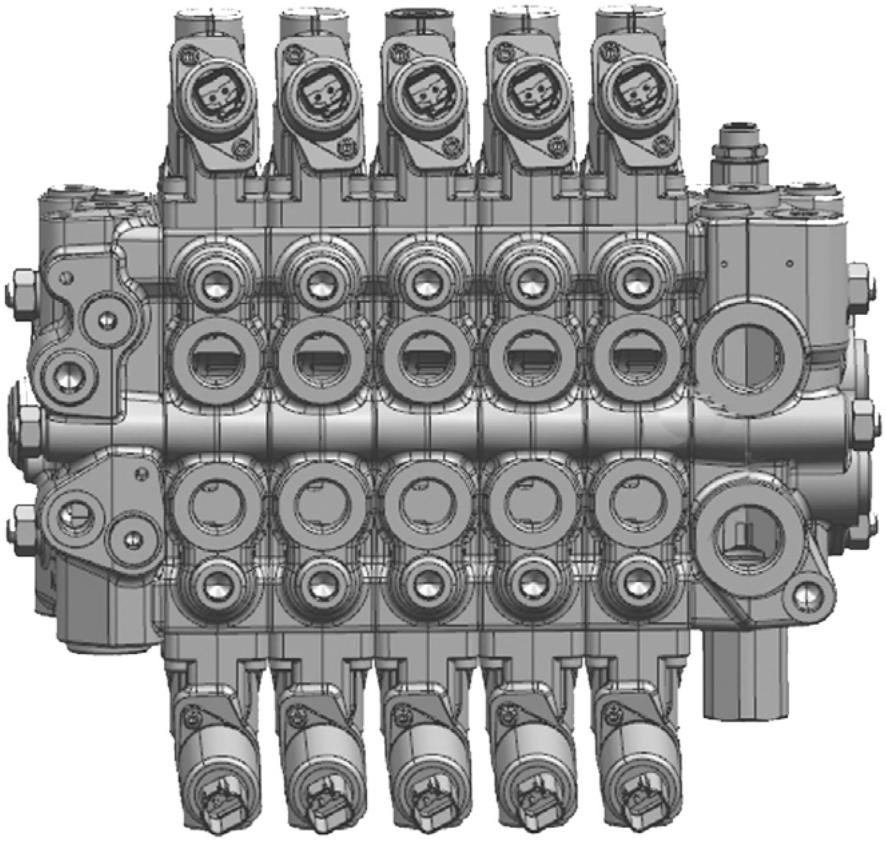

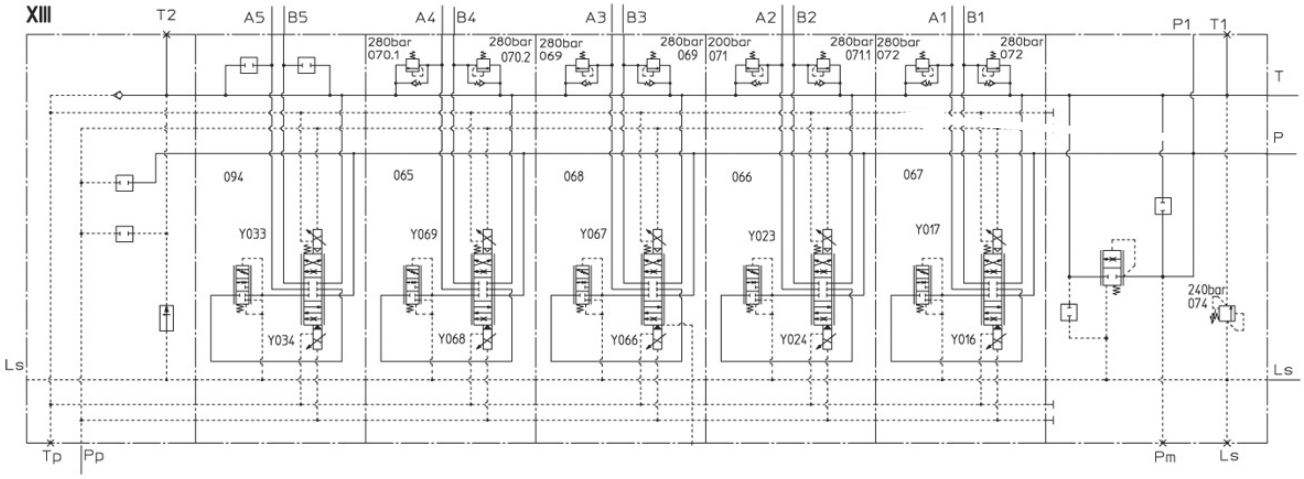

Hydraulic control unit XIII

Hydraulic control units **XIII** from four to five sections will be used. Section 5 does not have a secondary valve.

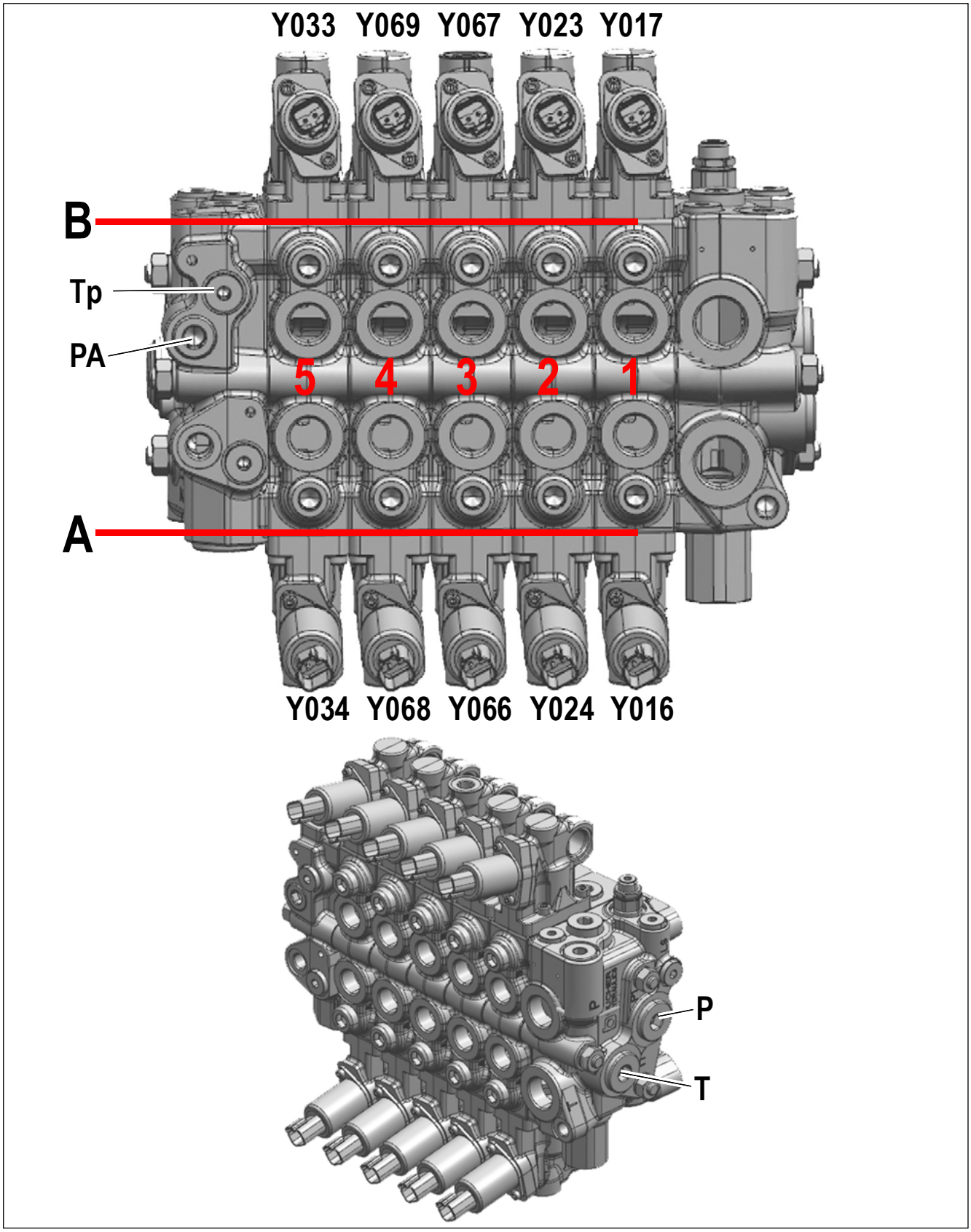

Description: control unit XIII

Pos.	Component	Remarks
A	Port designation on control valve XIII	Section 1–5 bottom side
B	Port designation on control valve XIII	Section 1–5 rod side
P	Work hydraulics pump I	36 ccm/U (2.196 in³)
PA	Pilot control (boost pressure)	Approx. 30 bar (435.10 psi)
T	Tank recirculation via the return filter	–
Tp	Tank venting for the pilot caps	–
Y016	Lock proportional valve (Section 1)	PWM 4.7 Ω
Y017	Unlock proportional valve (Section 1)	PWM 4.7 Ω
Y023	Retract proportional valve (Section 2)	PWM 4.7 Ω
Y024	Extend proportional valve (Section 2)	PWM 4.7 Ω
Y033	Proportional valve additional circuit (Section 5)	PWM 4.7 Ω
Y034	Proportional valve additional circuit (Section 5)	PWM 4.7 Ω
Y066	Raise proportional valve (Section 3)	PWM 4.7 Ω
Y067	Lower proportional valve (Section 3)	PWM 4.7 Ω
Y068	Tilt back proportional valve (Section 4)	PWM 4.7 Ω
Y069	Tip out proportional valve (Section 4)	PWM 4.7 Ω

Valves from hydraulic control unit XIII

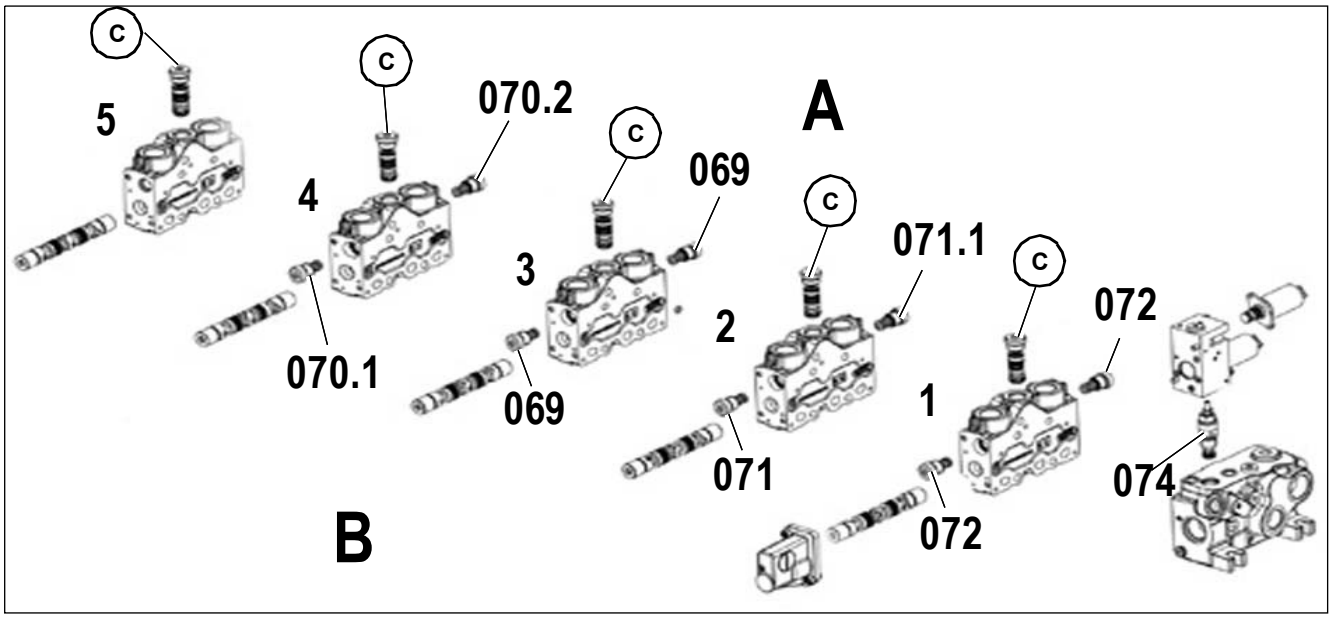

Description: control unit XIII

Pos.	Component	Remarks
1	3rd control circuit section 067	80 l/min (21.10 US gpm)
2	Push-out ram section 066	A2 – 100 l/min (26.12 US gpm) B2 – 80 l/min (21.10 US gpm)
3	Lift ram section 068	100 l/min (26.12 US gpm)
4	Tilt ram section 065	A4 – 100 l/min (26.12 US gpm) B4 – 80 l/min (21.10 US gpm)
5	Section rear additional control circuit Hitch/Tipper 094	80 l/min (21.10 US gpm)
A	Port designation on control valve XIII	Section 1–5 bottom side
B	Port designation on control valve XIII	Section 1–5 rod side
C	Pressure compensators	–
069	Secondary valve for raise lift cylinder (B)	270–290 bar (3916–4206 psi)
069	Secondary valve for lower lift cylinder (A)	270–290 bar (3916–4206 psi)
070.1	Secondary valve for tipping cylinder rod side fill shovel (A)	270–290 bar (3916–4206 psi)
070.2	Secondary valve for tipping cylinder bottom side empty shovel (B4)	270–290 bar (3916–4206 psi)
071	Secondary valve for push-out ram Extend bottom side (B)	190 – 210 bar (2755 – 3045 psi)
071.1	Secondary valve for push-out ram Retract rod side (A)	270–290 bar (3916–4206 psi)
072	Secondary valve 3rd control circuit, lock/unlock (A/B)	270–290 bar (3916–4206 psi)
074	LS pressure relief valve	240 bar (3480.91 psi)

Additional control unit

Additional control device for PTO and rear hitch

The additional control unit is built into the rear of the telehandler.

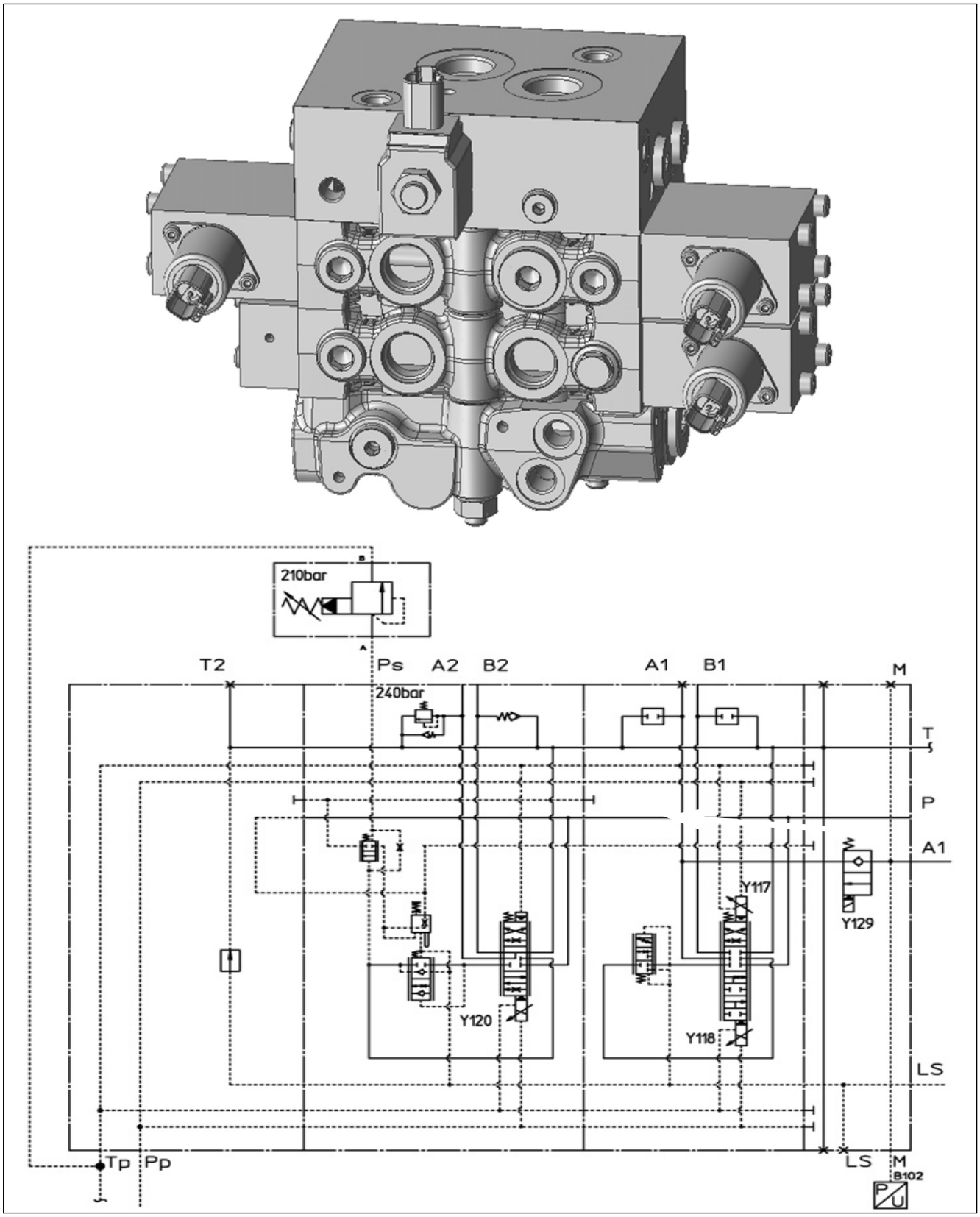

Additional control unit

Additional control device for PTO and rear hitch

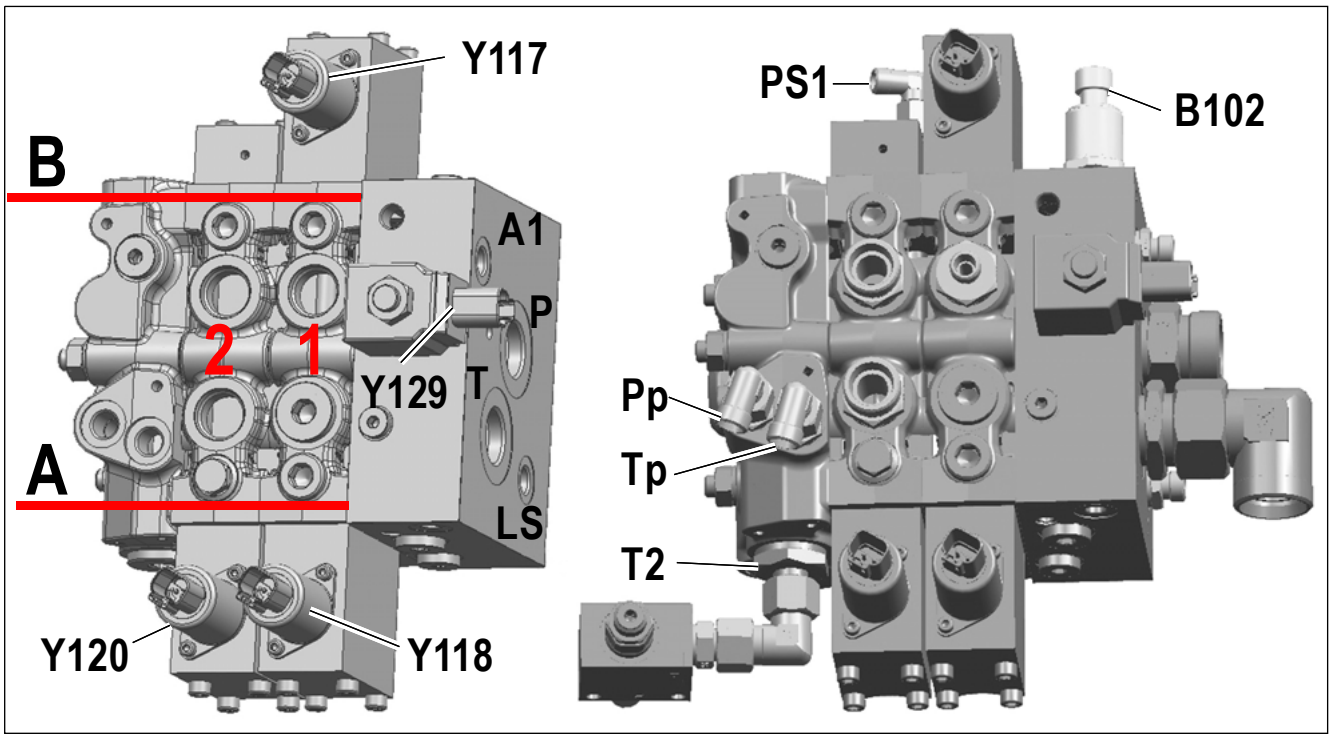

Desig-nation	Connection	Remarks
1	Section 1 rear hitch	–
2	Section 2 PTO	–
A	Connection designation of the working line	Section 1–2 rod side
A1	Work line	Section 1
B	Connection designation of the working line	Section 1–2 bottom side
B102	Triangle rear hitch load pressure sensor	0–300 bar (0–4351 psi)
LS	Load pressure signal	240 bar (3480 psi)
P	Work hydraulics pump I	36 ccm/U (2.196 in³)
PS1	Pressure limiting valve	210 bar (3046 psi)
T	Tank return	–
T2	Tank return	–
Tp	Tank venting for the pilot caps	–
Y117	Raise triangle linkage proportional valve	PWM 4.7 Ω
Y118	Lower triangle linkage proportional valve	PWM 4.7 Ω
Y120	Proportional valve of PTO	PWM 4.7 Ω
Y129	Rear hydraulics lowering mode proportional valve	PWM 4.7 Ω

Gear pump working hydraulics I

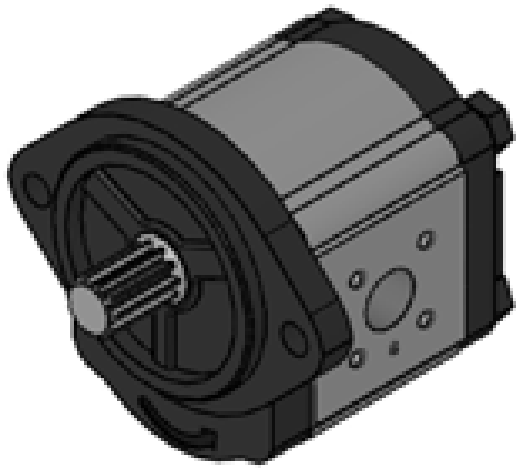

Component	Remarks	System pressure
I	36 ccm/U (2.196 in³)	230–250 bar (2320.6–2755.72 psi)

Function description

The gear pump for working hydraulics **I** supplies the steering orbitrol **IV** and the main control unit **XIII** with oil via the priority valve **008**. The oil flow is filtered by a high-pressure filter **167**directly after the gear pump **I**.

Priority valve 008

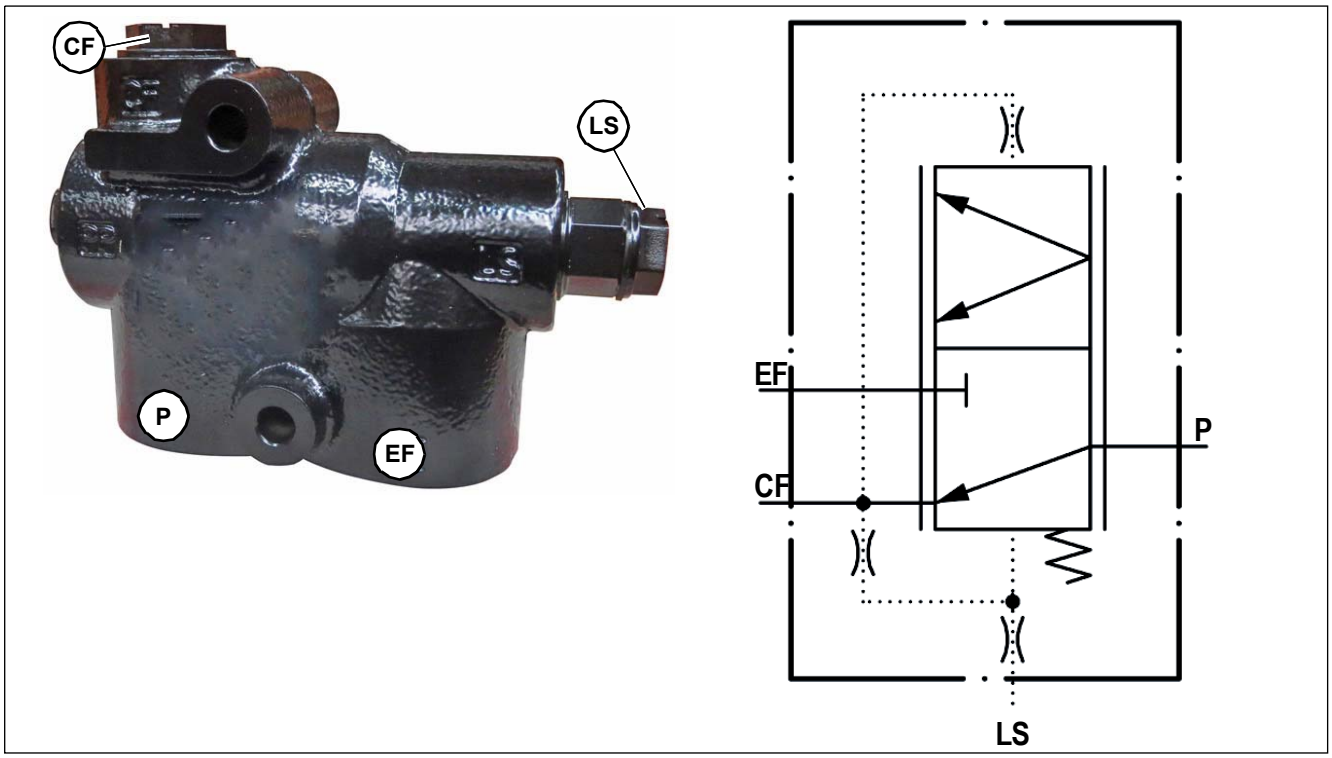

Connection	Power supply
P	Input from gear pump, working hydraulics **I**
LS	Input from steering orbitrol **IV**, port **LS**
CF	Output to steering orbitrol **IV**, port **P**
EF	Output to main control unit **XIII**, port **P1**

Function description

The priority valve **008** is responsible for dividing the oil flow from the gear pump work hydraulics **I into** the steering system and work hydraulics. Here, the oil is primarily supplied to the steering system **IV**.

Function

The oil flow coming from the gear pump **I** passes through port **P** and an internal duct of the priority valve **008** to the control spool. The control spool is then pushed against the spring via the area ratio and the oil flow is distributed evenly between the steering orbitrol **IV** and the main control unit **XIII**..

As soon as the steering orbitrol **IV** is actuated it generates an LS signal, which acts on the control spool of the priority valve **008**. Through the combination of the spring force and the LS signal the control spool is pushed back towards the initial position and the steering assumes priority. This can mean that functions of the working hydraulics are executed more slowly during steering.

Pressure accumulator 077

Important information

Membrane and hydraulic accumulators are pressure tanks in accordance with the European Pressure Equipment Directive 97/23/EC. Hydraulic accumulators are exclusively for the purpose of accumulating and discharging hydraulic fluids. Membrane or hydraulic accumulators consist of a fluid and a gas section with a membrane as gas-tight separating element.

DANGER

If the pressure accumulator is not filled correctly there is a risk of explosion! If pressure accumulators are filled with oxygen or air, they can explode!

This can result in serious injuries or even death.

► Only fill pressure accumulators with nitrogen.

Information

No welding or mechanical work may be carried out on the pressure accumulator!

We recommend checking the pretensioning pressure annually. This inspection may only be carried out by a skilled person with the respective qualification!

Component	Function	Remarks
077	Pilot control pressure accumulator	Gas filling overpressure 10 bar (145 psi)

Function description

Pressure accumulator **077** is the supply pressure for the pilot control. If the diesel engine fails this ensures that an emergency lowering manoeuvre can be carried out. It is also needed in order to release pressure from the individual control circuits.

Pressure accumulator 080

Important information

Membrane and hydraulic accumulators are pressure tanks in accordance with the European Pressure Equipment Directive 97/23/EC. Hydraulic accumulators are exclusively for the purpose of accumulating and discharging hydraulic fluids. Membrane or hydraulic accumulators consist of a fluid and a gas section with a membrane as gas-tight separating element.

DANGER

If the pressure accumulator is not filled correctly there is a risk of explosion! If pressure accumulators are filled with oxygen or air, they can explode!

This can result in serious injuries or even death.

► Only fill pressure accumulators with nitrogen.

Information

No welding or mechanical work may be carried out on the pressure accumulator!

We recommend checking the pretensioning pressure annually. This inspection may only be carried out by a skilled person with the respective qualification!

Component	Function	Remarks
080	Load stabiliser pressure accumulator	Gas filling pressure 35 bar (507,63 psi)

Function description

The pressure accumulator **080** is connected to the load stabiliser **XIV** via port **ACC**. The pressure accumulator **080** is activated via the load stabiliser solenoid valve **Y021**.

If the load stabiliser solenoid valve **Y021** is energized by controller **N004**, the bottom side of the lift cylinder **085** is connected with the pressure reservoir **080**.

Hose burst valve with load stabiliser XIV

DANGER

No adjustments may be made to any hose burst valves.

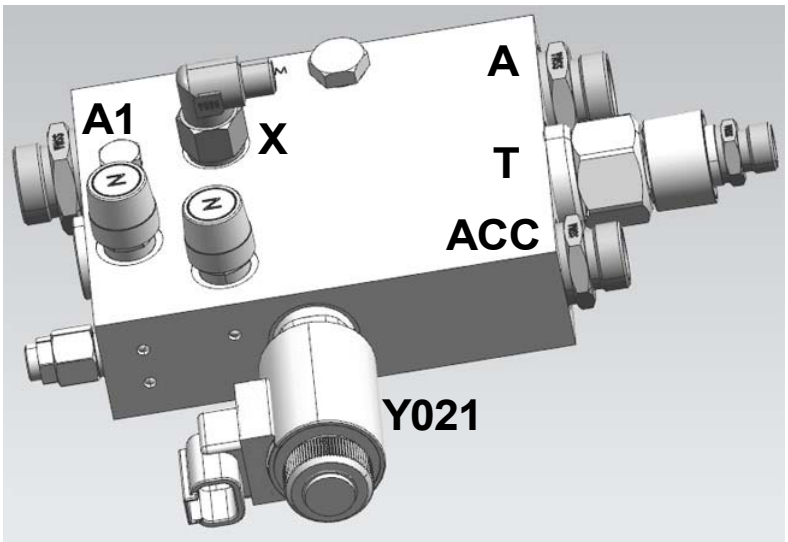

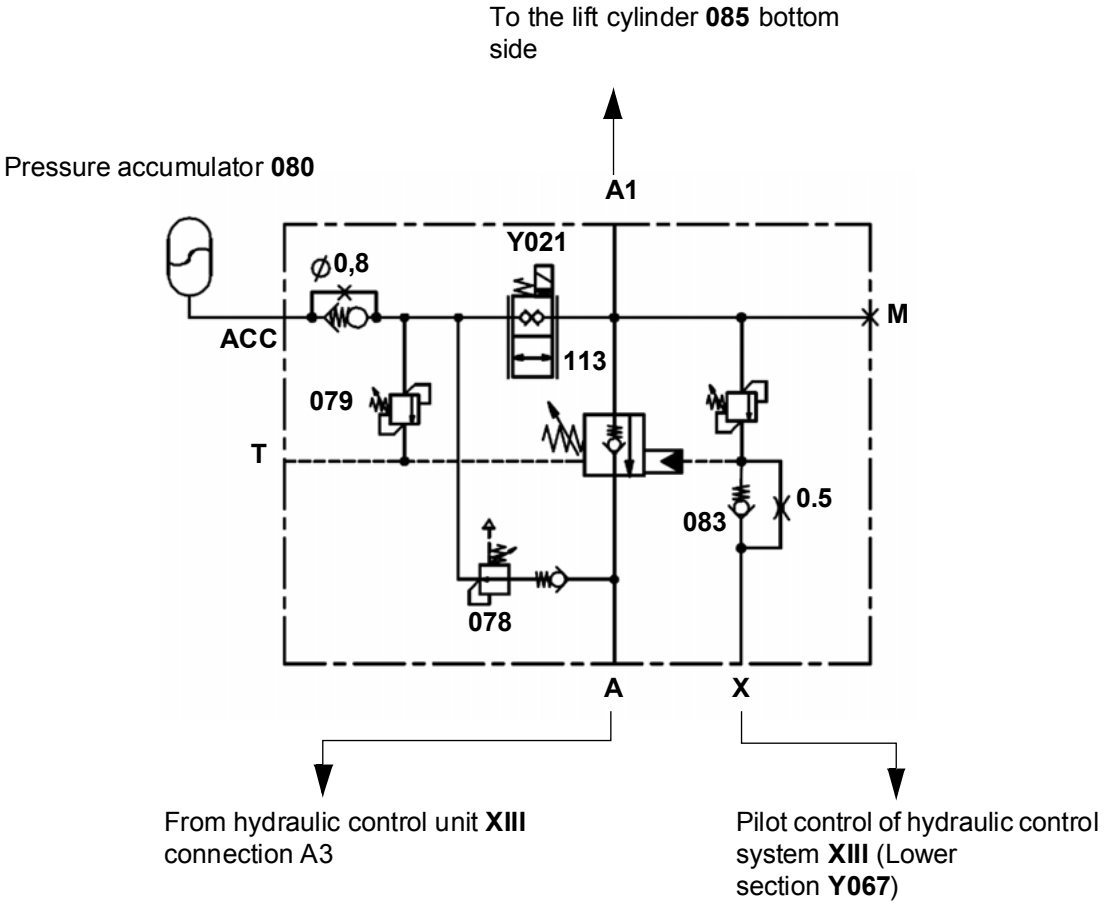

Description: hose burst valve with load stabiliser XIV

Connection	Power supply
A	Input from hydraulic control unit **XIII** A3
A1	Output from lifting cylinder **085** (bottom side)
ACC	Input pressure accumulator **080**
X	Input of the hydraulic control unit **XIII** (lower section **Y067**) pilot control
M	Locked
T	Output to tank **XX**

Component	Function
078	Pre-load valve 110 bar (1595.42 psi)
079	Pressure relief valve 280 bar (4061 psi)
083	Non-return valve
113	Valve for connecting a piston-type accumulator **080** with the bottom side of the lift cylinder **085**

Component	Function	Remarks
Y021	Solenoid valve for load stabiliser is energized when the load stabiliser is switched on.	12 Volt 5.4 Ω

Functional characteristic: hose burst valve with load stabiliser XIV

Valve **XIV** covers on the one hand the hose burst valve function at lifting cylinder **085** and on the other it is activated for the boom via switch **S044**. The hose burst valve prevents the boom from falling down in the event of a break in the line on the bottom side of lifting cylinder **085**. In addition, the load stabiliser is switched on with solenoid valve **Y021**.

Hose burst valve function

When raising the boom, the volume flow coming from control unit **XIII** (connection A3)) can flow to connection A at valve **XIV** via a non-return valve to the floor side of the lifting cylinder **085** . To lower the boom, a volume flow rate from the bottom side of lifting cylinder **085** has to flow back to control unit **XIII**. This flow direction is initially blocked by the non-return valve in valve **XIV**. In an intentional lowering of the boom, the pilot control pressure for lowering is conveyed to connection X in valve **XIV**. This opens the non-return valve **083** and the volume flow is released from **A1** to **A**, thus lowering the boom. In addition, a secondary valve also releases this flow direction in the event of an external load that is too heavy or a shock load.

Load stabiliser

The load stabiliser is activated via switch **S044**. Solenoid valve **Y021** is supplied with power in order for it to be activated. This opens valve **113** and releases the line between the floor side of the lifting cylinder **085** and the pressure accumulator **080**. When the valve **113** is closed, the floor side of the lifting cylinder **085** is separated from the pressure accumulator **080** and the load stabiliser is deactivated. The pressure reservoir **080** is pre-tensioned with a pressure of 110 bar (1595.42 psi). This means that the boom can no longer be lowered. Via the pressure release valve **078**, a volume flow can flow from connection **A** into the lift cylinder until the pressure of 110 bar (1595.42 psi) has been reached. The pressure relief valve **079** relieves the pressure from the pressure reservoir **080** by up to 280 bar (4061 psi). Especially when valve **113** is closed, pressure overload caused by a temperature rise of the pressure reservoir **080** is regulated and discharged via connection **T** to tank **XX**. In order to avoid accidental lowering of the boom should the hydraulic line between valve **XIV** and pressure accumulator **080** break, additional protection is provided for at connection **ACC**. The non-return valve (additional protection) which closes if the volume flow to the pressure accumulator **080** is too great, prevents the boom from falling.

Hose burst valve without load stabiliser 166

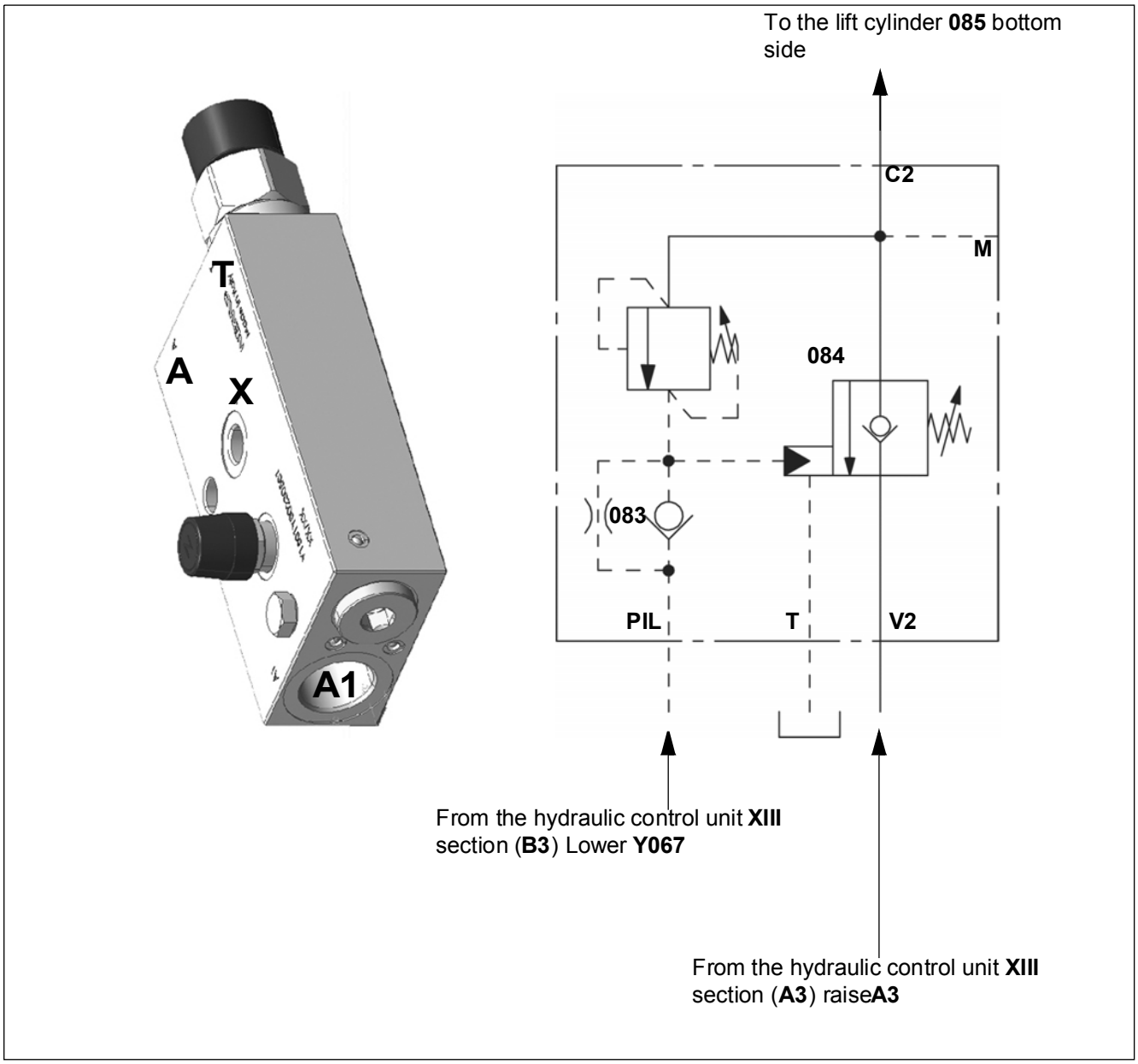

Connection	Power supply
A (V2)	Input from hydraulic control unit **XIII** A4
A1 (C2)	Output from lifting cylinder **085** (bottom side)
PIL	Input from hydraulic control unit **XIII** (lower section **Y067**)
M	Locked
T	Output to tank **XX**

Component	Function
083	Non-return valve
084	Upstream non-return valve

Functional characteristics: hose burst valve without load stabiliser 166

Valve **166** covers the hose burst valve function at the lift cylinder **085**. The hose burst valve prevents the boom from falling down in the event of a break in the line on the bottom side of lifting cylinder **085**.

Function

When lifting the telescopic arm, the volume flow from the control unit **XIII** (connection **A3**) coming from **A** to **A1** in valve **166** can flow via the non-return valve **084.** To lower the telescopic arm, a volume flow must be enabled from the bottom side of lift cylinder **085** back to control unit **XIII**. This flow direction is initially blocked by the non-return valve **084** in valve **166**. For an intentional lowering of the telescopic arm, the pilot control pressure for lowering is conveyed to connection **X** on valve **166**. Via a non-return valve **083** this controls non-return valve **084** and the volume flow from **A1** to **A** is released, thus lowering the telescopic arm In addition, a secondary valve also releases this flow direction in the event of an external load that is too heavy or a shock load.

Anticavitation valve tilt ram and compensation cylinder 082

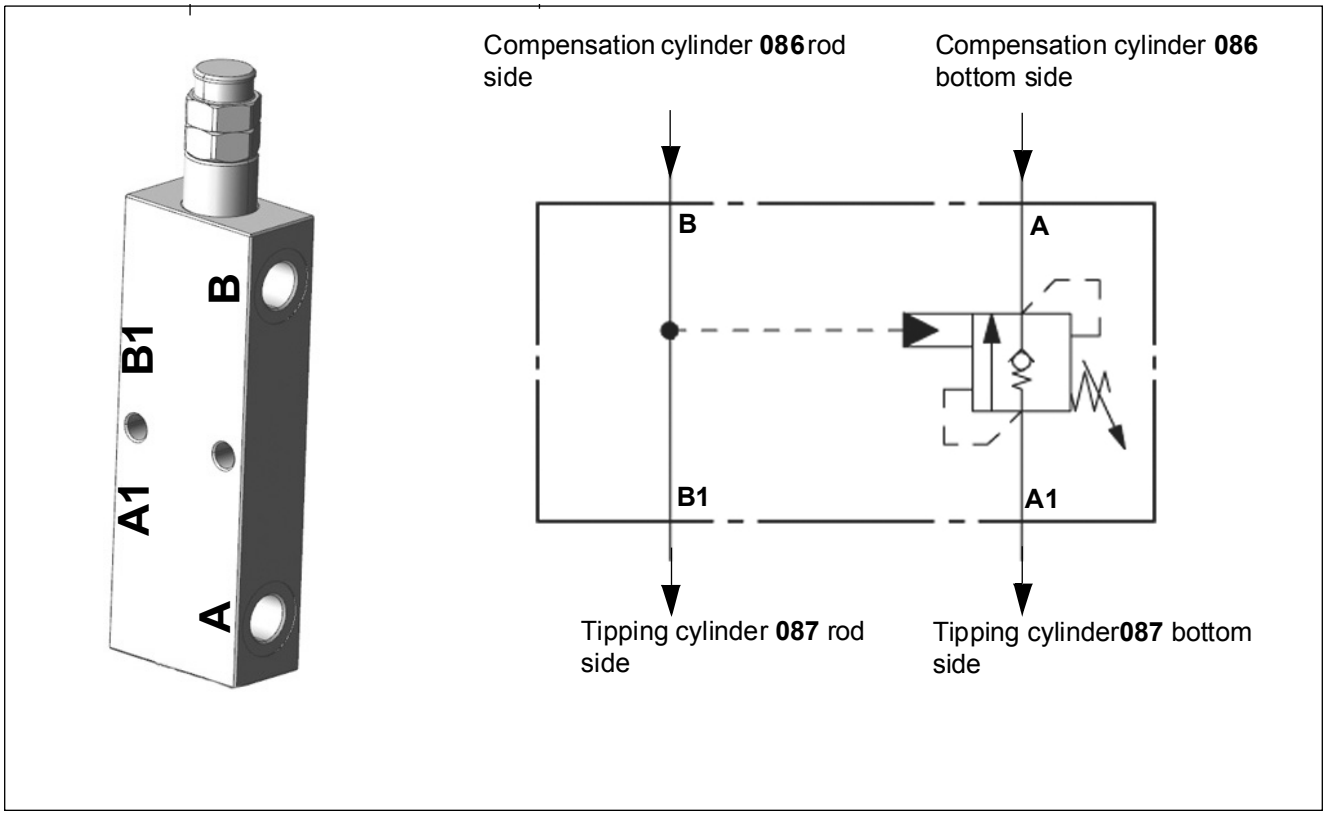

Connection	Power supply
A	Input compensation cylinder **086** (bottom side)
A1	Output from tilt ram **087** (bottom side)
B	Input to compensation cylinder **086** (rod side)
B1	Output from tilt ram **087** (rod side)

Functional characteristics: anti-cavitation valve for tipping and compensation cylinder 082

In order to keep the load at the same angle in relation to the vehicle when the boom is raising, tilt ram **087** is coupled to the compensation cylinder **086**. During this manoeuvre, the anticavitation valve **082** ensures that no unwanted side effects are incurred. It prevents the full pressure from the bottom side of tilt ram **087** from impacting the bottom side of the compensation cylinder **086** when the load stabiliser is switched on and the tilt-in function is also activated. This could cause the boom to be raised. Cavitation can occur in the bottom side of the lift cylinder **085 .** If subsequently, the dump out function were operated, the boom would drop suddenly. Furthermore, it prevents the full pressure from the bottom side of tilt ram **087** from impacting the bottom side of the compensation cylinder during a tilt-in manoeuvre against a block. This could lead to distortion and an overload of the steel structure of the boom.

Function

When the boom is raised, pressure is exerted on the rod side of the compensation cylinder **086**. Via connection **B**the pressure is exerted on the cavitation valve **082**, thereby controlling it. The oil from the bottom side of tilt ram **087** can flow afterwards to the bottom side of the compensation cylinder **086** via the anticavitation valve **082**. If the telescopic arm is lowered, oil from the bottom side of the compensating cylinder **086** can flow via connection A via the non-return valve to connection **A1** and the bottom side of the tipping cylinder **087**.

If there is high pressure at the bottom side of the tipping cylinder **087**and no pressure on the rod side of the tipping cylinder **087** and compensation cylinder **086**, the anti-cavitation valve **082** acts like a pressure-reducing valve and reduces the pressure from connection **A1** to **A** by 190 bar (2755.7 psi).

Tilt ram hose burst valve 088

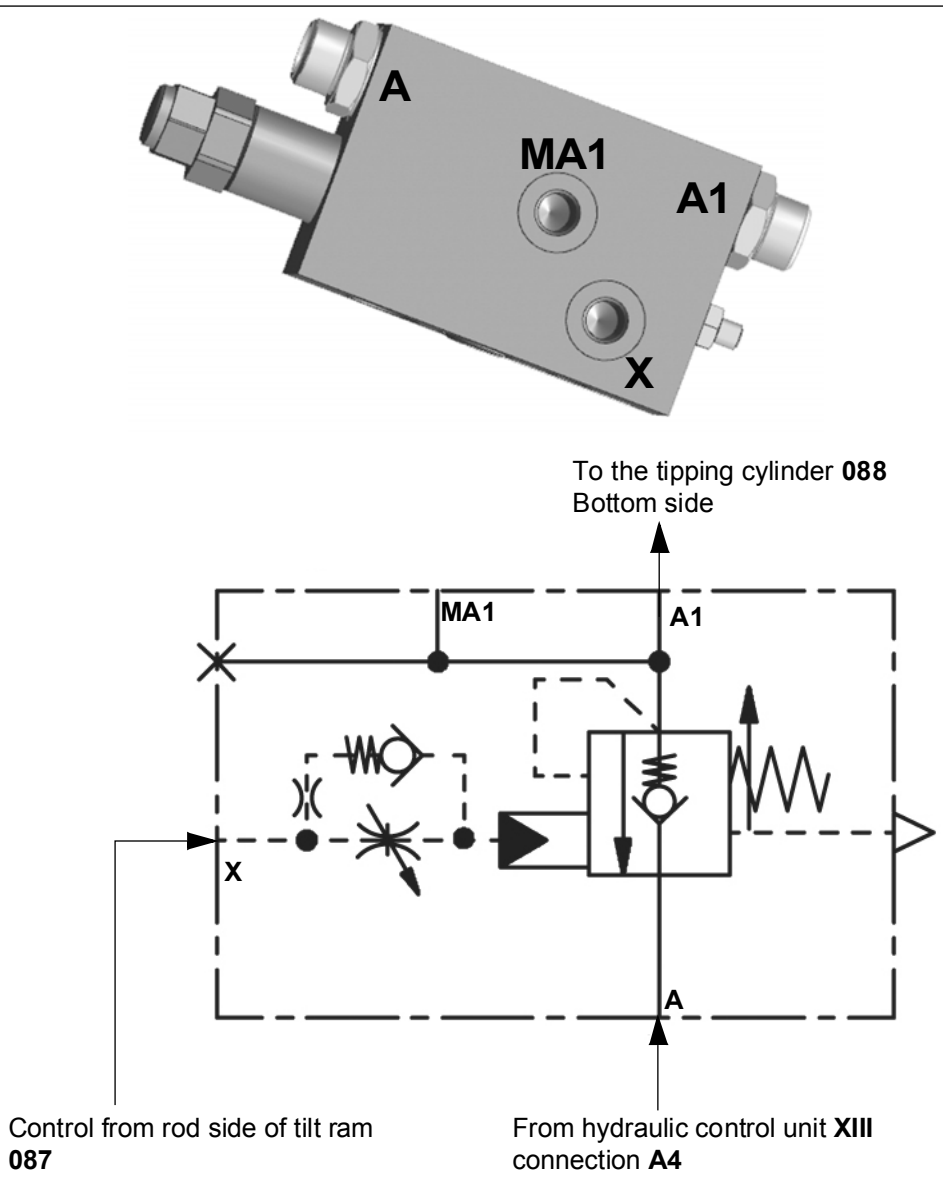

Connection	Power supply
A	Input from hydraulic control unit **XIII** (A4)
A1	Output to tilt ram **087** (bottom side)
X	Input to tilt ram **087** (rod side)
MA1	Bleed port

Functional characteristics: hose burst valve for tipping cylinder 088

Valve **088** covers the hose burst valve function at the lifting cylinder **087**. The hose burst valve prevents the load from being dumped out in the event of a break in the line on the bottom side of tilt ram 087.

Function

When tipping the telescopic arm, the volume flow from the control unit **XIII** (connection **A4**) coming from connection **A** to **A1**can flow into valve **088** via the non-return valve. To tilt out the boom a volume flow must be enabled from the bottom side of tilt ram **087** back to control unit **XIII**, this flow direction is initially blocked by the non-return valve in valve **088**. If tilting out is intended, the pressure on the rod side of the tilt ram **087** opens valve **088** via port **X** on the valve. The control pressure for the opening process is applied by a throttle and dissipated via a non-return valve in order to reduce vibrations.

A secondary valve is additionally integrated into valve **088**. In the event of external loads that are too heavy or a shock load that would cause too high a pressure being exerted on the bottom side of tilt ram **087**, the hose burst valve is also opened until the peak pressure has dissipated.

Hose burst valve for push-out ram 090

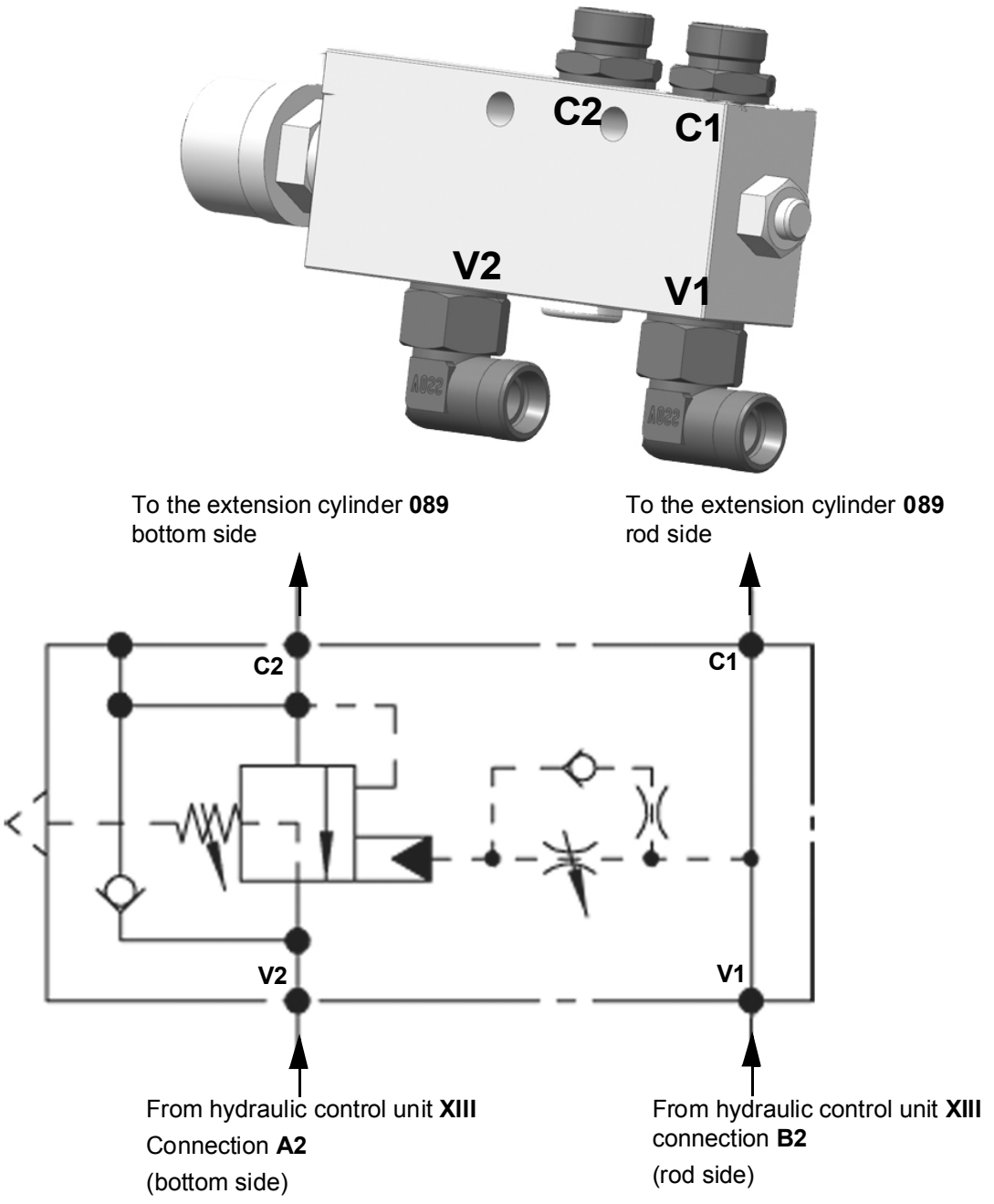

Connection	Power supply
C1	Output to push-out ram **089** (rod side)
C2	Output to push-out ram **089** (bottom side)
V1	Input from hydraulic control unit **XIII** (B2)
V2	Input from hydraulic control unit **XIII** (A2)

Functional characteristics: hose burst valve for extension cylinder 090

Valve **090** covers the hose burst valve function at the push-out ram **089**. The hose burst valve prevents the load from being retracted in the event of a break in the line on the bottom side of the push-out ram **089**.

Function

When extending the telescopic arm, the volume flow coming from control unit **XIII** (connection **A2**) from connection **A** to **A1**in valve **090** can flow via the non-return valve. To tilt in the boom a volume flow must be enabled from the bottom side of the push-out ram **089** back to control unit **XIII**, this flow direction is initially blocked by the non-return valve in valve **090**. In an intentional retraction manoeuvre, the pressure on the rod side of the push-out ram **089** opens the valve. The control pressure for the opening process is applied by a throttle and dissipated via a non-return valve in order to reduce vibrations.

A secondary valve is additional integrated into valve **090**. In the event of external loads that are too heavy or a shock load that would cause too high a pressure being exerted on the bottom side of push-out ram **089**, the hose burst valve is also opened until the peak pressure has dissipated.

Relief valve for load stabiliser 144 (Y020)

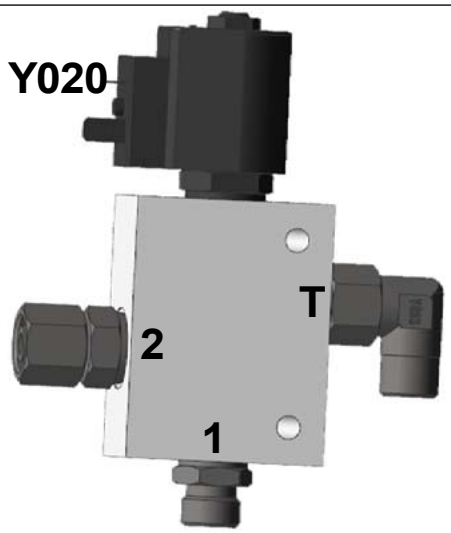

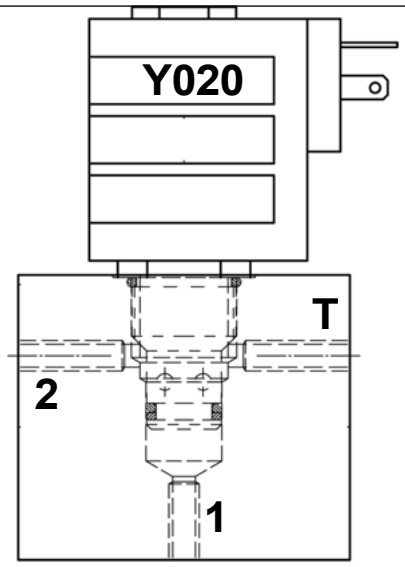

From the lift cylinder **085** (rod side connection)

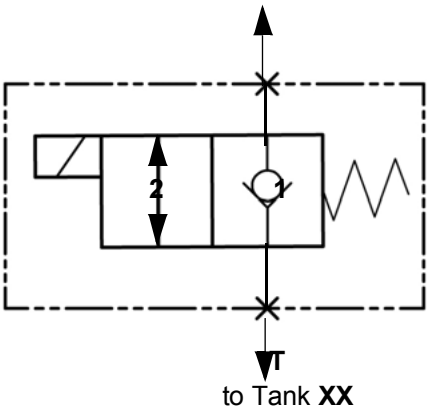

to Tank **XX**

Connection	Power supply
1	From lift cylinder **085** (rod side)
2	Solenoid valve **Y020** energized with lift cylinder 085 (rod side) connected
T	Connection to the tank
Y020	Solenoid valve, load stabiliser **Y020**

Function description

The solenoid valve **Y020** is supplied with voltage by the load stabiliser switch **S044**. When the machine is at standstill, solenoid valve **Y020** is not energised. It establishes a connection between lifting cylinder **085** (rod side) and tank **XX**. This enables the boom to move upwards freely.

Safety valve of third control circuit 117 (Y025)

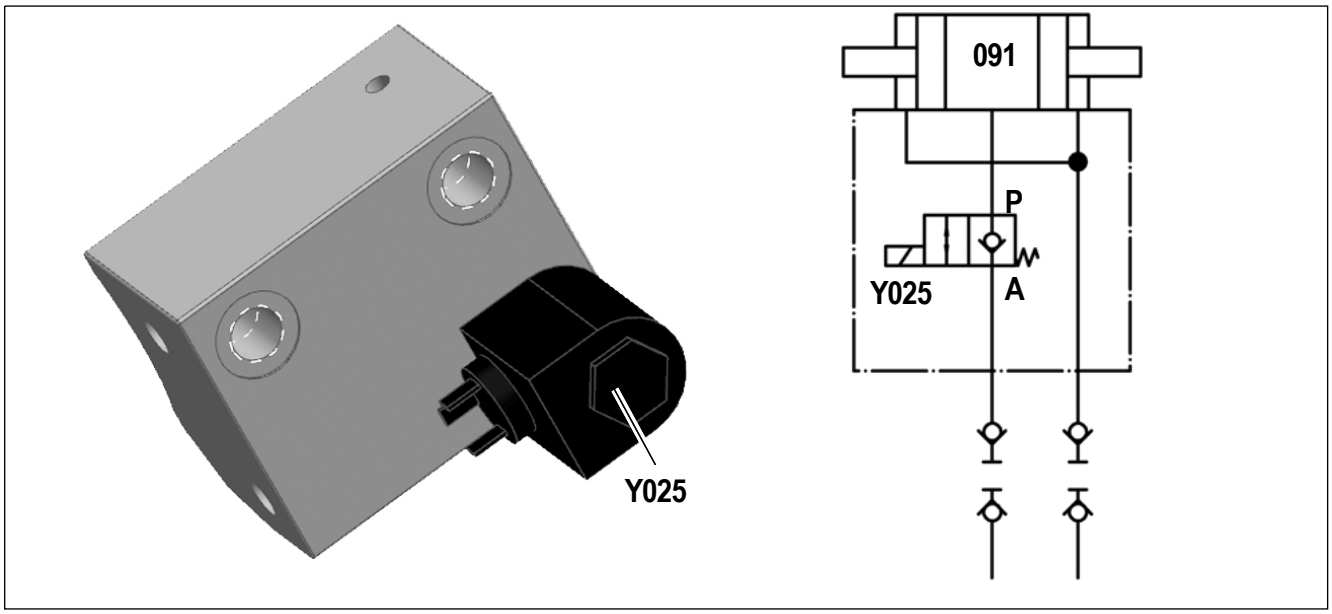

Connection	Power supply
A	Input from port, lock
P	Output to locking cylinder **091**

Component	Function	Measured value
Y025	Quickhitch lock solenoid valve	–

Function description

Solenoid valve **Y025** prevents unintentional opening of locking cylinder **091**. For opening, the touch button **S040**to circuit breaker **S030** must be pressed. Solenoid valve **Y025** from controller **N004** is energized, and connection **P** and **A** are connected.

Reversing valve of rear additional control circuit 128 (Y046)

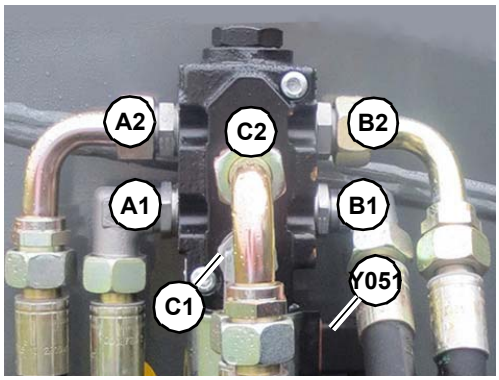

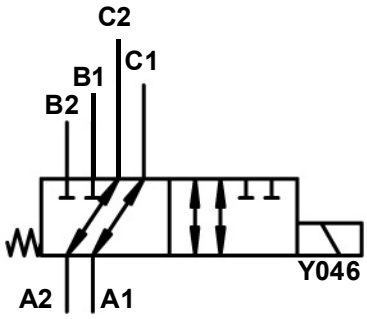

Connection	Power supply
A1	Input from section **B5**
A2	Input from section A5
B1	Output 4th service
B2	Output 4th service
C1	Output raise tipper or auto hitch
C2	Output lower tipper or auto hitch

Component	Function	Remarks
Y046	Solenoid valve switch-over fourth service rear for additional control circuit rear, tipper and auto hitch	12 V

Function description

The reversing valve is used to control various users with one oil supply. If the solenoid valve **Y046** is not energized, the fourth double action service can be used. If the reversing valve is energized, either the tipper or auto hitch is possible. When using the auto hitch, the solenoid valve **Y116** will be energized simultaneously in order to drain the bottom side of the auto hitch against the tank.

Reversing valve, 4th service in the front 133 (Y051)

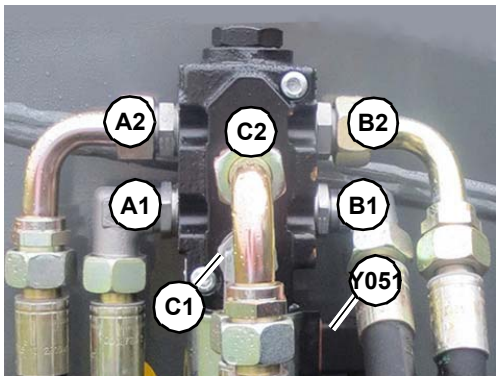

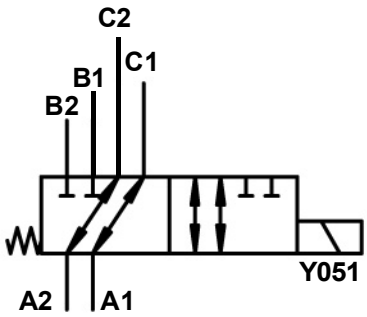

Connection	Power supply
A1	Input from section **B1**
A2	Input from section A1
B1	Output 4th service
B2	Output 4th service
C1	Output 3rd control circuit (unlock)
C2	Output 3rd control circuit (lock)

Component	Function	Remarks
Y051	Solenoid valve for changeover of front 4th control circuit (lock/unlock)	12 V

Function description

For controlling multiple consumers with one oil supply. As soon as voltage is supplied to solenoid valve **Y051** the 4th service can be used. If the solenoid valve **Y051** is dead, the oil flow is available to the third control circuit or the locking cylinder.

Relief valve 134 (Y106)

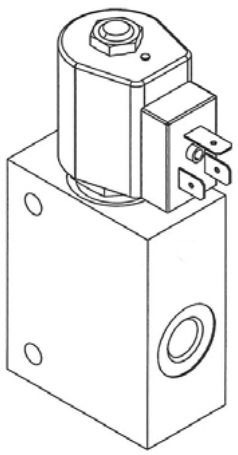

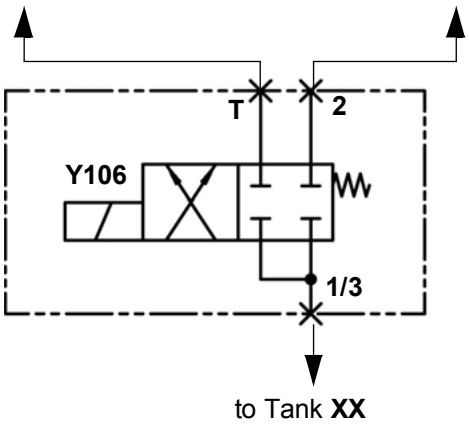

Connection	Power supply
T	Input from section A1
2	Input from section B1
1/3	Output to tank **XX**

Component	Function	Remarks
Y106	Solenoid valve (pressure relief)	12 V

Function description

With touch button **S127** on the telescopic arm, the pressure in the third control circuit is reduced via the relief valve **134** in order to be able to attach the quick hitch facility.

Relief valve for lower tipper 143 (Y116)

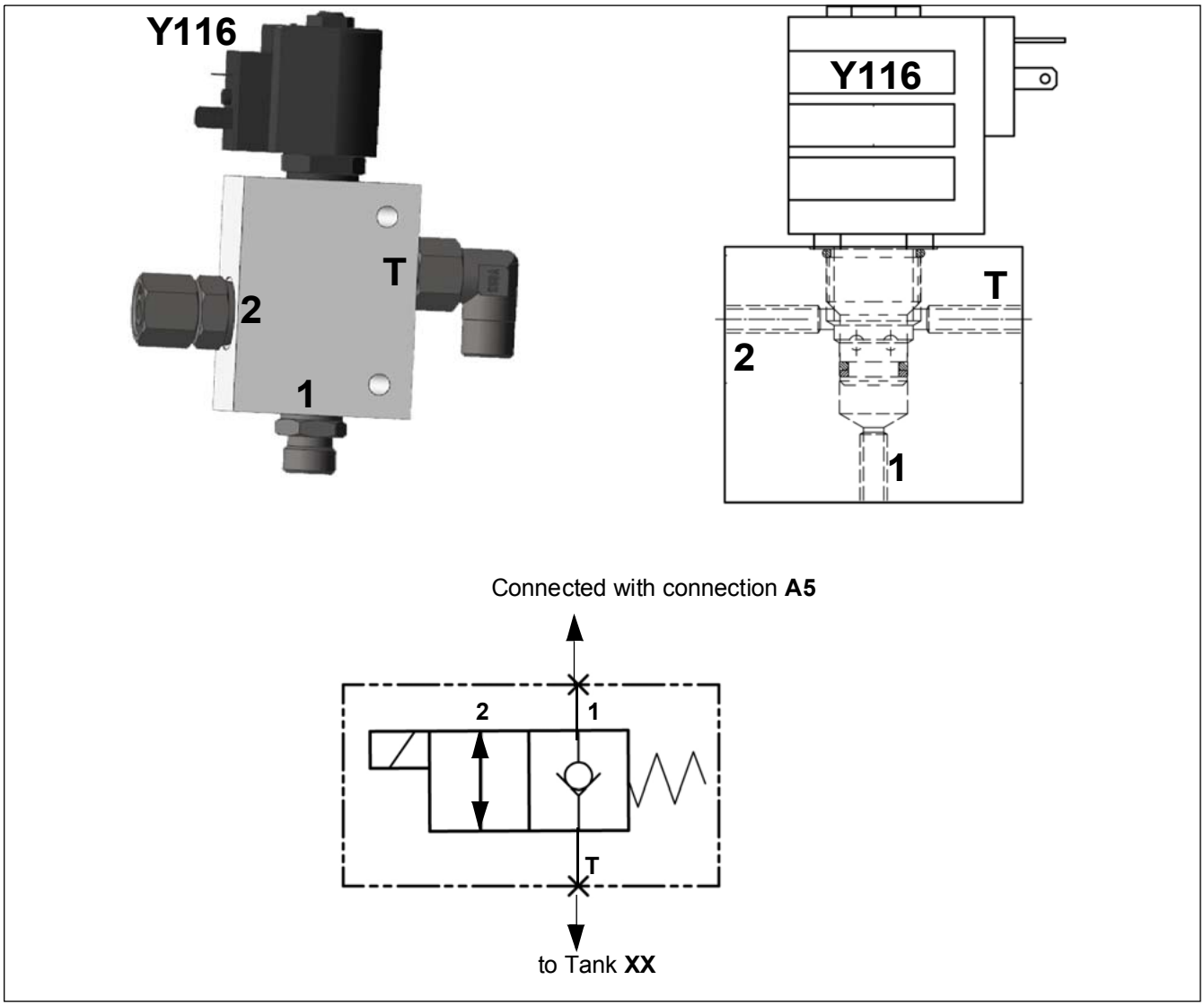

Connection	Power supply
1	From the hydraulic control unit **XIII** (bottom side A5)
2	Lower tipper solenoid valve **Y116** energized with the auto hitch (bottom side) connected
T	Connection to the tank
Y116	Solenoid valve for lowering tipper **Y116**

Function description

Solenoid valve **Y116**is energized with circuit breaker **S070** (lower tipper). In order to obtain circulation from the hydraulic control unit **XII** connection A5 to the tank. In other words, from hydraulic control unit **XII** connection **B5** is used to lower the tipper.

The solenoid valve **Y116** is only required in connection with the auto hitch.

Valve block 129 (Y047/Y113)

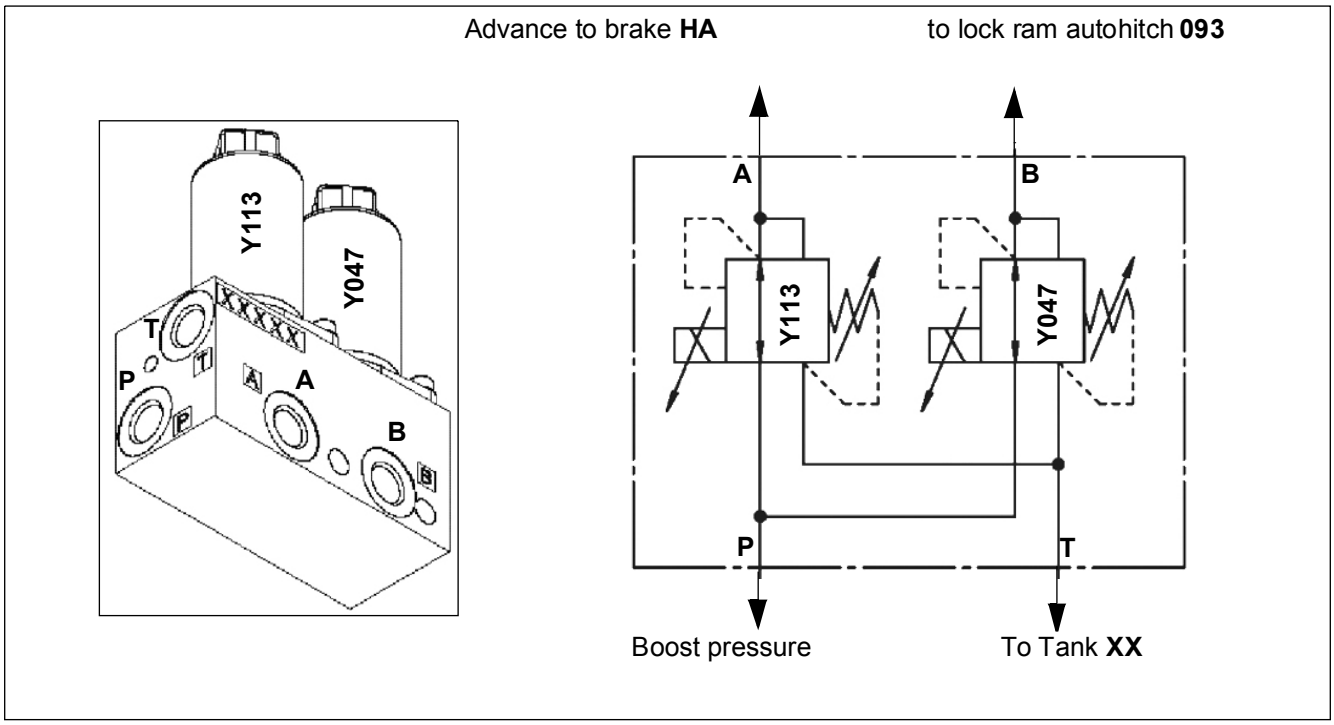

Connection	Power supply
A	Output advancement brake, rear axis
B	Output of locking cylinder **093** unlock auto hitch
P	Boost pressure
T	Output to tank **XX**

Component	Function	Remarks
Y047	Auto-Hitch unlock solenoid valve	12 V
Y113	Solenoid valve (hydraulic trailer brake)	PWM

Function description

Solenoid valve Y047

Through the unlock auto hitch solenoid valve **Y047**, the locking cylinder **093** is opened via the boost pressure. The unlock auto hitch solenoid valve **Y047** is energized via the touch button **S131** lower auto hitch.

Proportional valve Y113

With the proportional valve **Y113** hydraulic trailer brake, the boost pressure is transmitted to the trailer brake valve **140**. The trailer is thus loaded depending on the brake pressure of a brake overfeed.

Hydraulic oil tank XX

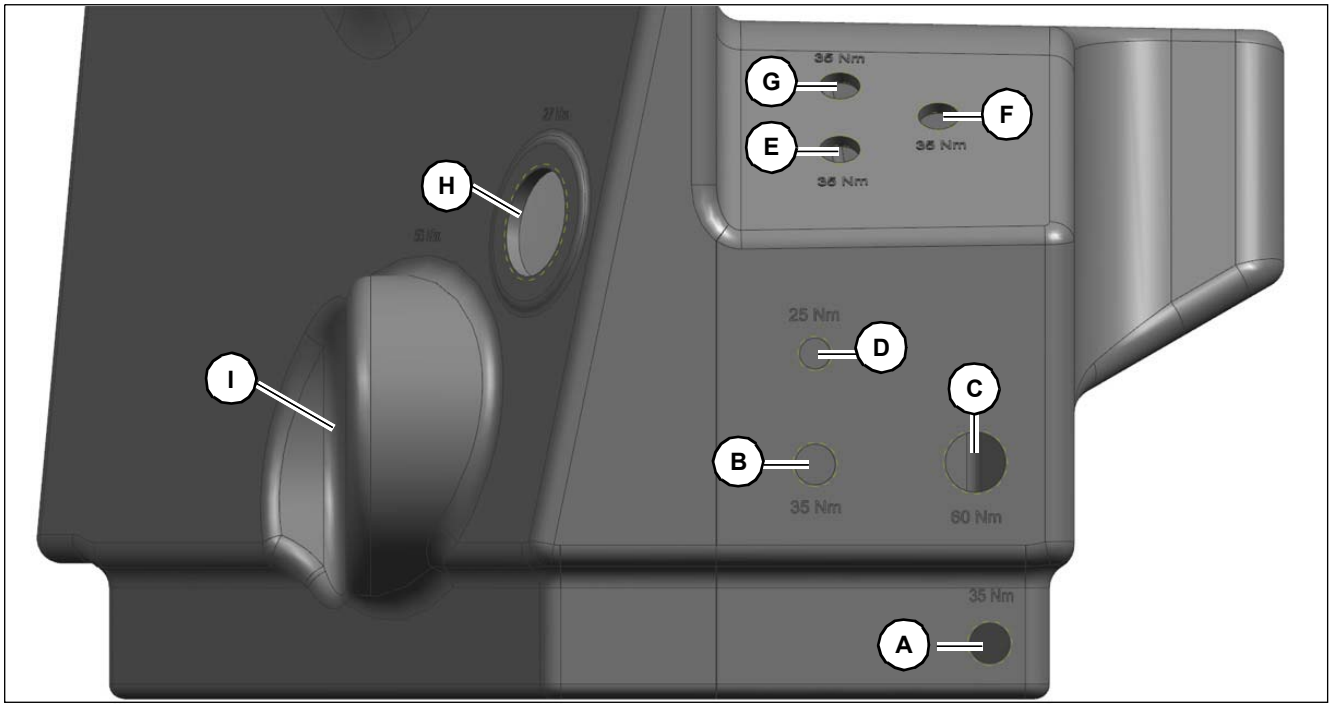

Pos.	Function	Tightening torque
A	Drain plug	35 Nm (25.8 ft.lb)
B	Locked	35 Nm (25.8 ft.lb)
C	Non-return valve **016** (2 bar (29 psi)) leakage oil of the hydraulic pump**VII**	60 Nm (44.3 ft.lb)
D	Pressure switch **S007**	25 Nm (18.4 ft.lb)
E	Leakage oil for auto hitch **092**, trailer brake valve **140**	35 Nm (25.8 ft.lb)
F	Hydraulic trailer brake, reverse travel LS control line	35 Nm (25.8 ft.lb)
G	Reverse travel steering system **IV**	35 Nm (25.8 ft.lb)
H	Preheating	27 Nm (19.9 ft.lb)
I	Intake of constant pump of work hydraulics/steering system	50 Nm (36.9 ft.lb)

High pressure filter 167

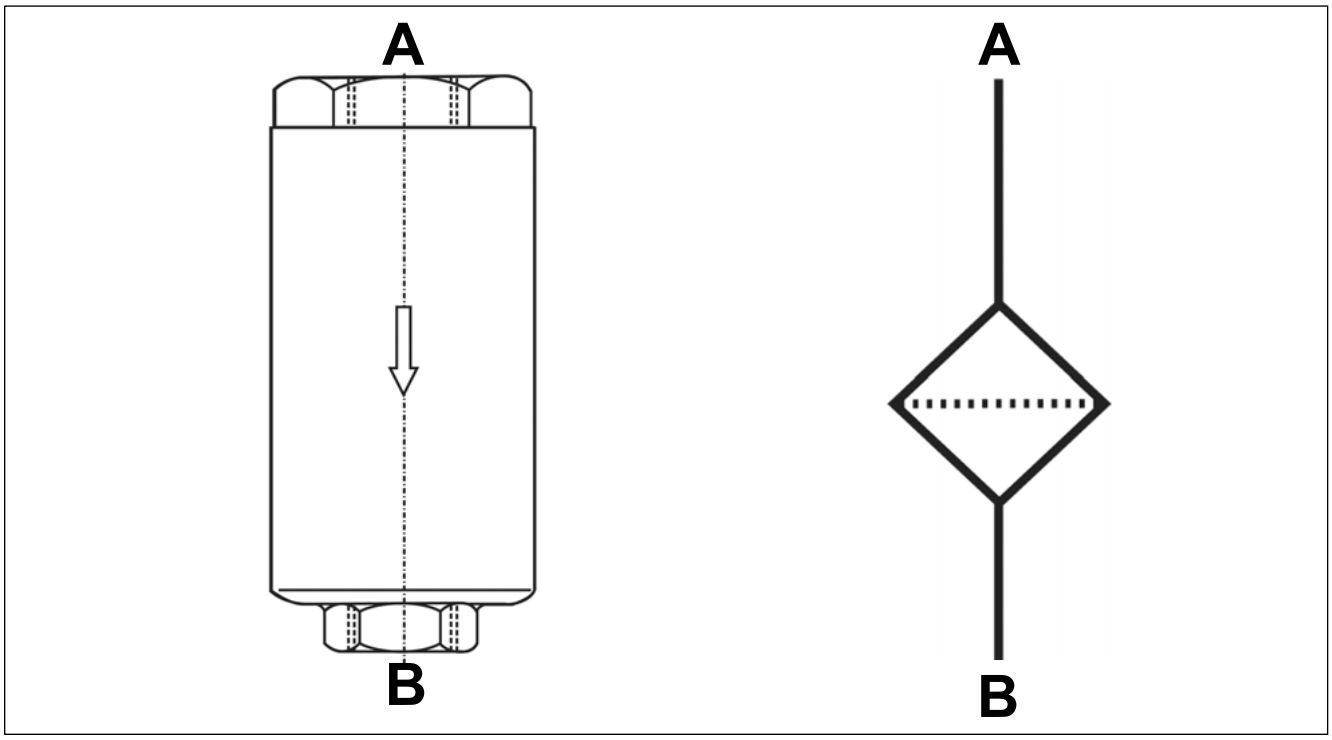

Connection	Power supply
A	Input from gear pump, working hydraulics **I**
B	Output to priority valve **008**

Function description

From the work hydraulics gear pump **I**, oil flows through the pressure filter to the priority valve **008**. Residue that remains in the system or intake shavings from the wear track gear pump work hydraulics **I**, are retained by the high pressure filter **167**. Functional failures (e.g. on the hydraulic control unit **XII**) can thereby be prevented.

The high pressure filter **167** has a filtration rating of 60 µm (0.00236 in).

Suction filter

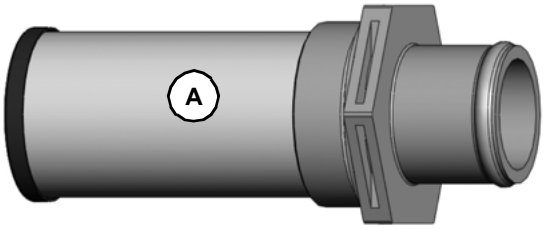

Component	Function	Remarks
A	Suction filter	50 Nm (36.9 ft.lb)

Function description

The suction filter protects the gear pump **I** from impurities in the hydraulic tank. The suction filter is integrated into the hydraulic tank.

Reflux filter 026

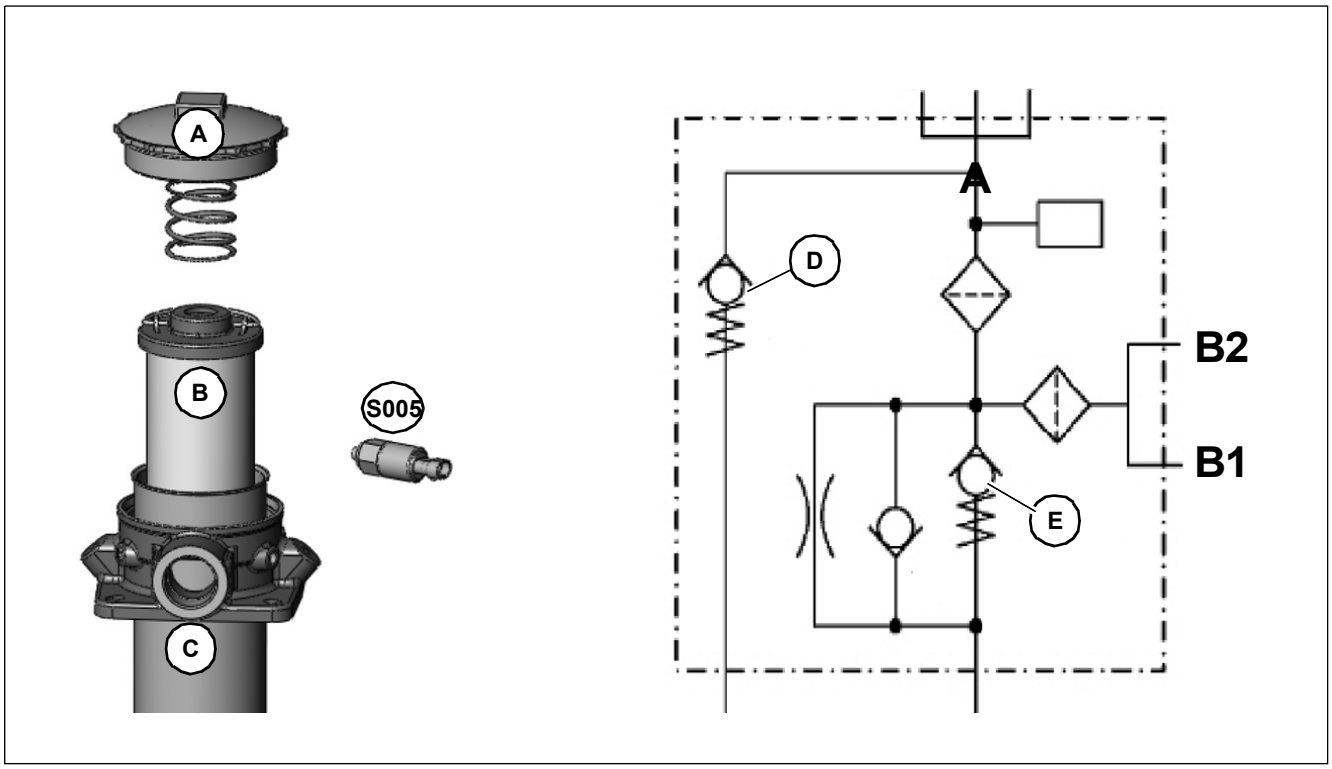

Component	Function	Remarks
A	Lid	15 Nm (217.55 psi)
B	Filter element	–
C	Housing	–
D	Bypass valve	2.5 bar (36.26 psi)
E	pilot control pressure insert	0.5 bar (7.25 psi)
S005	Pressure switch, hydraulics (reflux pressure)	2 bar (29 psi)

Connection	Power supply
A	Reverse travel from the drive, hydraulic control unit **XII**, reversing fan load stabiliser **112**, lower tipper **143**
B1	Suction connection of boost pressure **001**
B2	–
T	to Tank **XX**

Function description

Via the return filter **026**, oil flows from the drive of the work hydraulics and valves **112** and **143**. The return pressure is monitored by push button switch **S005** and from 2 bar, the control lamp **H007** lights up. The bypass valve opens at 2.5 bar (36.26 psi).

The charge pump **001**draws its oil from the suction filter of connection **B1**. The suction side is pre-tensioned to approx. 0.5 bar (7.25 psi).

8.3 Work hydraulics test report

Serial no.	Operating hours	Notes

Hydraulic oil temperature 40°C – 60°C (104°F – 140°F)

Measurement at gear pump

Page	Test features	Note	Specified value	Measured value
8-46	Min. idling speed	Laptop	940–960 min^{-1} (rpm)	
	Max. idling speed	Laptop	2550–2650 min^{-1} (rpm)	
8-47	Work hydraulics	At max. engine speed	250–260 bar (3625.94–3770.98 psi)	

Work hydraulics test ports

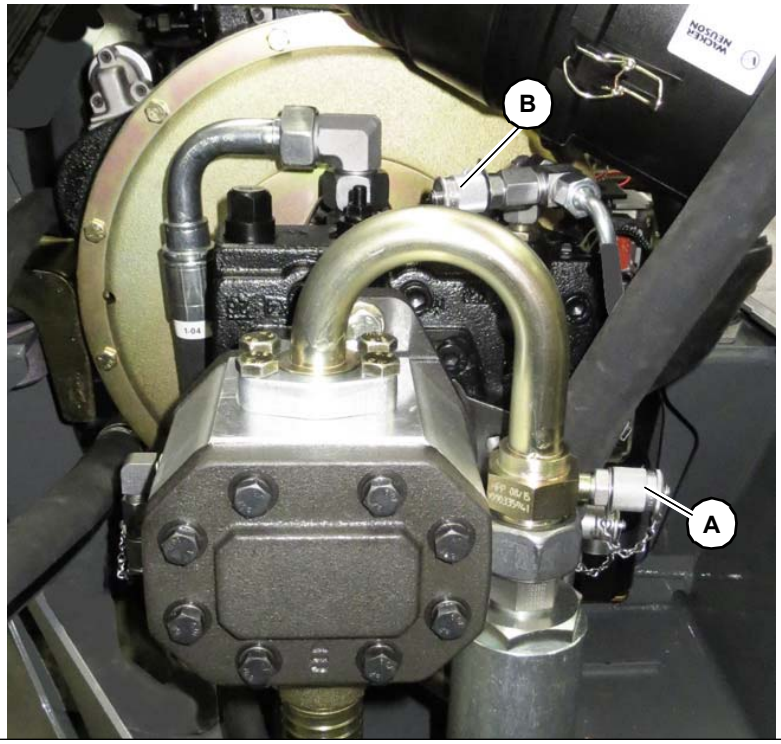

Pos.	Component
A	Test port fitting for work hydraulics in front of the priority valve
B	Test port fitting for boost pressure (pilot control pressure)

8.4 Checking and making adjustments

Preparations

DANGER

Risk of crushing and injuries when boom is raised and not secured!

Before any assembly or maintenance work:

► Raise the telescopic boom

► Install the safety prop (supplied with the machine) over the piston rod on the extended lift cylinder, and secure it with a bolt

► See the Operator's Manual supplied with the telehandler

► Unload the hydraulic system by switching off the engine and leaving the ignition on

► Disengage the starter and remove the ignition switch key

DANGER

Risk of being scalded or injured when working close to hydraulic components that are hot and/or under pressure

Before removing

► Allow the hydraulic system to cool down

► Wear safety gloves

Notice

Damage to property because of work not carried out properly on the hydraulics

► In order to ensure that the hydraulics function smoothly, all work must be executed carefully and cleanly.

► Before starting with disassembly, clean the assembly area thoroughly also cleaning all hydr. screw connections and ports.

Required tools and screw connections

- Standard tools
- 2 x 60 bar (900 psi) pressure gauge
- 2 x 600 bar (9000 psi) pressure gauge
- 1 x Multimeter (or Diagnosis tool)

Preparations required to create a test report

1. Park the machine on firm and level ground.
2. Disengage the starter.
3. Connect diagnosis tool
4. See instructions for diagnosis tool.
5. Connect the pressure gauge.

Deviations in the pictures compared to the real vehicle are possible

Checking and adjusting the work hydraulics

Motor speed**: test**

Test feature	Note	Remarks	Rated value
Min. idling speed	Laptop	Idling speed	940–960 rpm
Max. idling speed	Laptop	Full throttle	2550–2650 rpm

1. Read the diesel engine speed using the diagnosis tool
- Rated idle speed, bottom (idling speed)
- Rated idle speed, top (full throttle)

Main pressure of work hydraulics: checking and adjusting

Test feature	Note	Rated value
Main pressure of working hydraulics	Max. diesel engine speed	250–260 bar (3625.94 – 3770.98 psi)

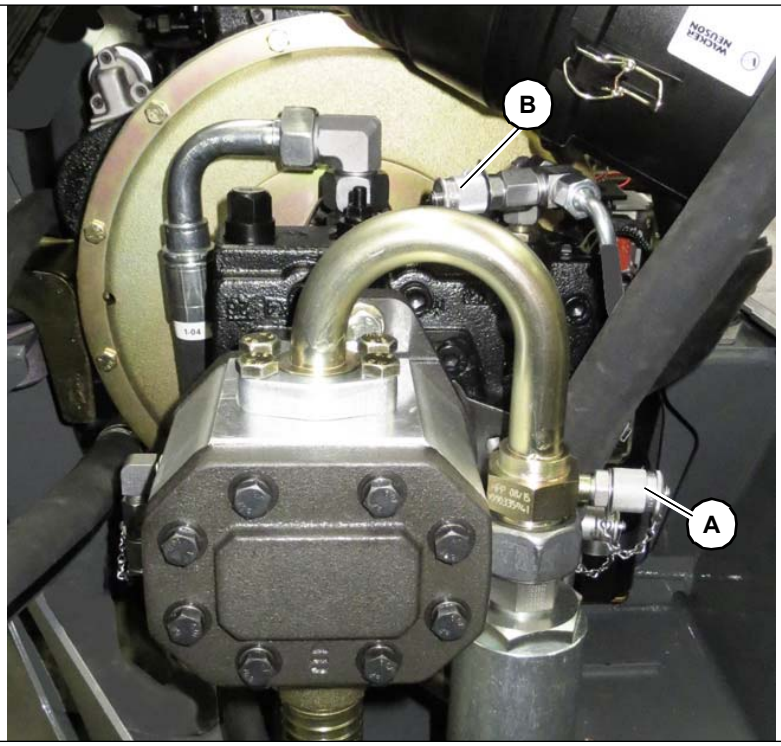

Pos.	Component	Remarks
A	Operating hydraulics test port	36 ccm/U (2,196 in³)

1. Connect pressure manometer to test port **A**
2. Start the diesel engine and rev it up to the full diesel motor speed
3. Slowly tilt in the tilt ram and operate against pressure
   ➥ Read the pressure off the pressure gauge

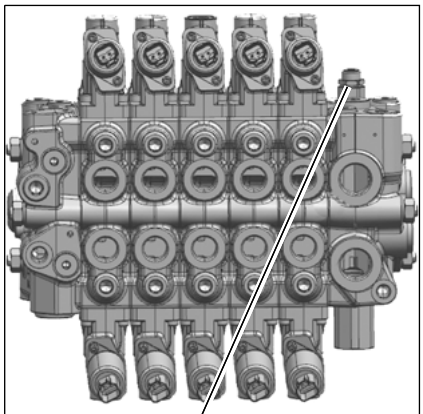
LS-pressure-limiting valve 074

Adjustment

- Turn the LS-pressure-limiting valve **074** at the hydraulic control unit **XIII**
  ➥ Pressure increase
- Unscrew the LS-pressure-limiting valve **074** at the hydraulic control unit **XIII**
  ➥ Pressure reduction

Boost pressure (pilot control pressure): checking and setting

Test feature	Note	Rated value
Boost pressure	Max. diesel engine speed	30 – 32 bar (435.113–464.121 psi)

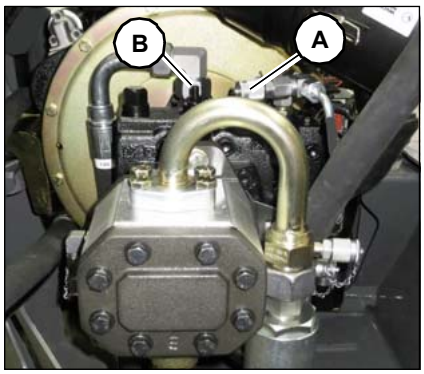

Checking

1. Put on parking brake
2. Connect sensor to test port **A** for boost pressure
3. Bring diesel engine up to full diesel engine speed
4. Ascertain boost pressure at full engine speed

There is a pressure difference of approx. 4 – 7 bar (58.01 – 101.52 psi) between the lower and upper idling speed

Adjustment

Required tools

- Hexagon socket AF 4
- Ring wrench AF 13

1. Boost pressure too low
   ➥ Screw in boost pressure valve **B**
2. Boost pressure too high
   ➥ Unscrew boost pressure valve **B**

Secondary valve: Control unit XIII

Compo-nent	Valve	Section	Connection	Rated value
069	Y067 Lower	3 lifting cylinder	B	270 – 290 bar (3916–4206 psi)
069	Y066 Raise	3 lifting cylinder	A	270 – 290 bar (3916–4206 psi)
070	Y069 Dump out	4 tilt ram3080	B	270 – 290 bar (3916–4206 psi)
070	Y068 Tilt in	4 tilt ram3080	A	270 – 290 bar (3916–4206 psi)
071.1	Y024 Extend	2 boom cylinder	A	190–210 bar (2755–3045 psi)
071	Y023 Retract	2 boom cylinder	B	270 – 290 bar (3916–4206 psi)
072	Y017 Lock	1 locking cylinder	A	270 – 290 bar (3916–4206 psi)
072	Y016 Unlock	1 locking cylinder	B	270 – 290 bar (3916–4206 psi)

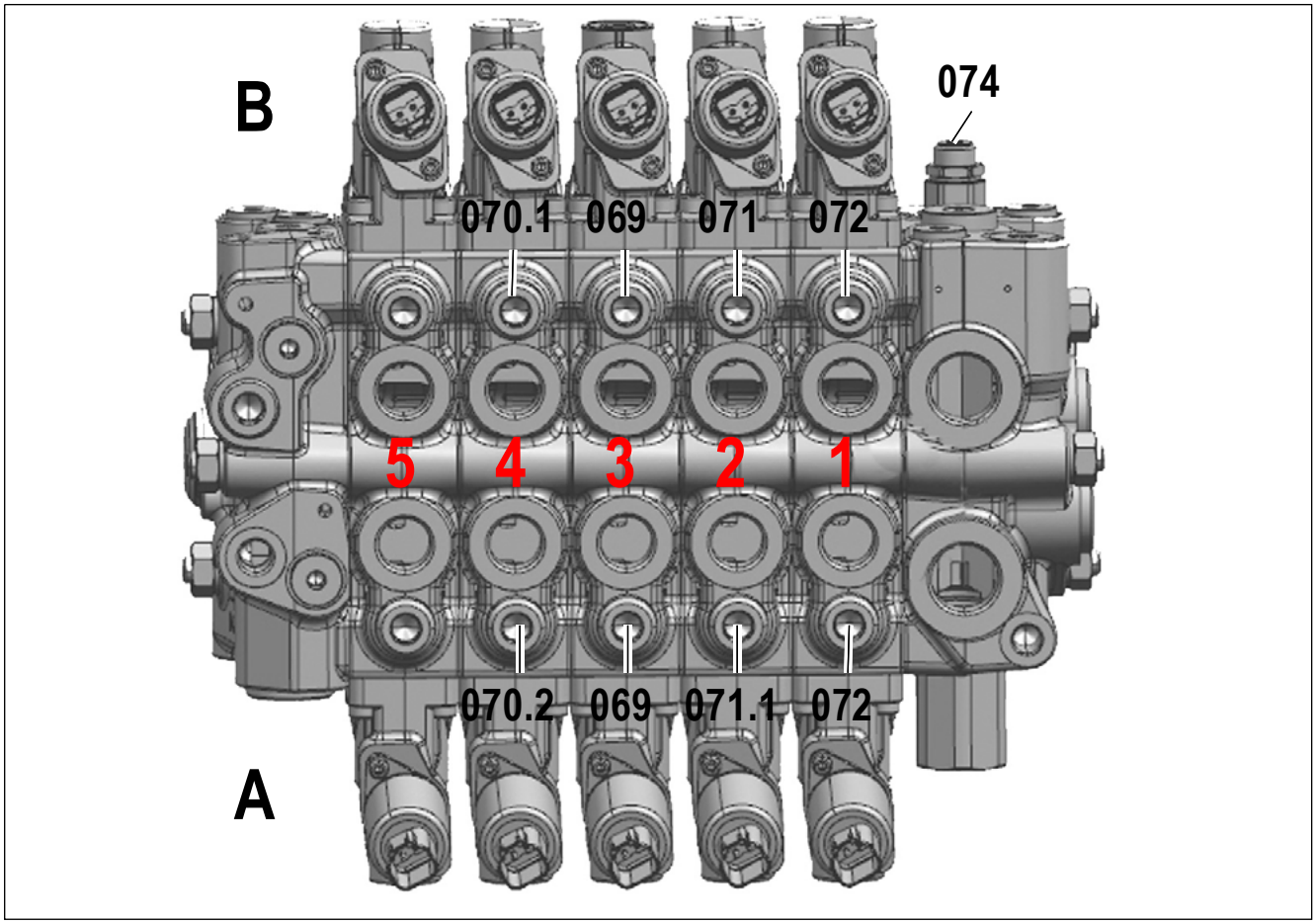

Secondary valve: additional control device

Pos.	Valve	Section	Connection	Rated value
A	Secondary pressure limiting	PTO shaft	A2	240 bar (3480,91)
B	Resuction	PTO (reverse travel)	B2	–

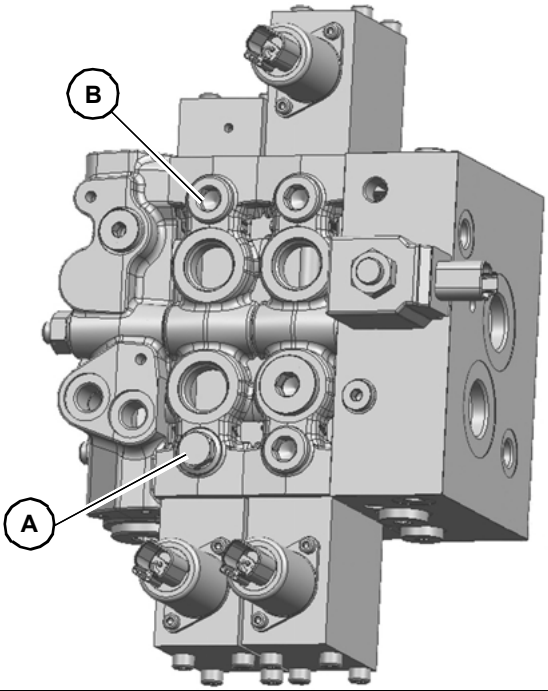

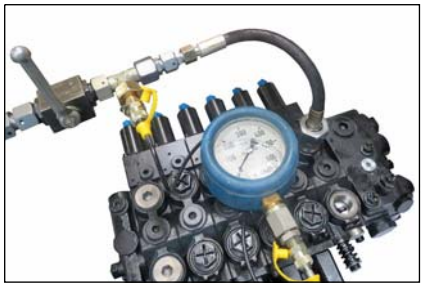

Check secondary valves

1. Raise and secure boom, see Repairs Manual
2. Disassemble work line
3. Connect hand press to pressure gauge
4. Add pressure to secondary valve and ascertain the opening pressure
   ➥ For pressure values of the individual secondary valves, see above

The secondary valves cannot be adjusted

Tightening torques for hydraulic control unit XIII

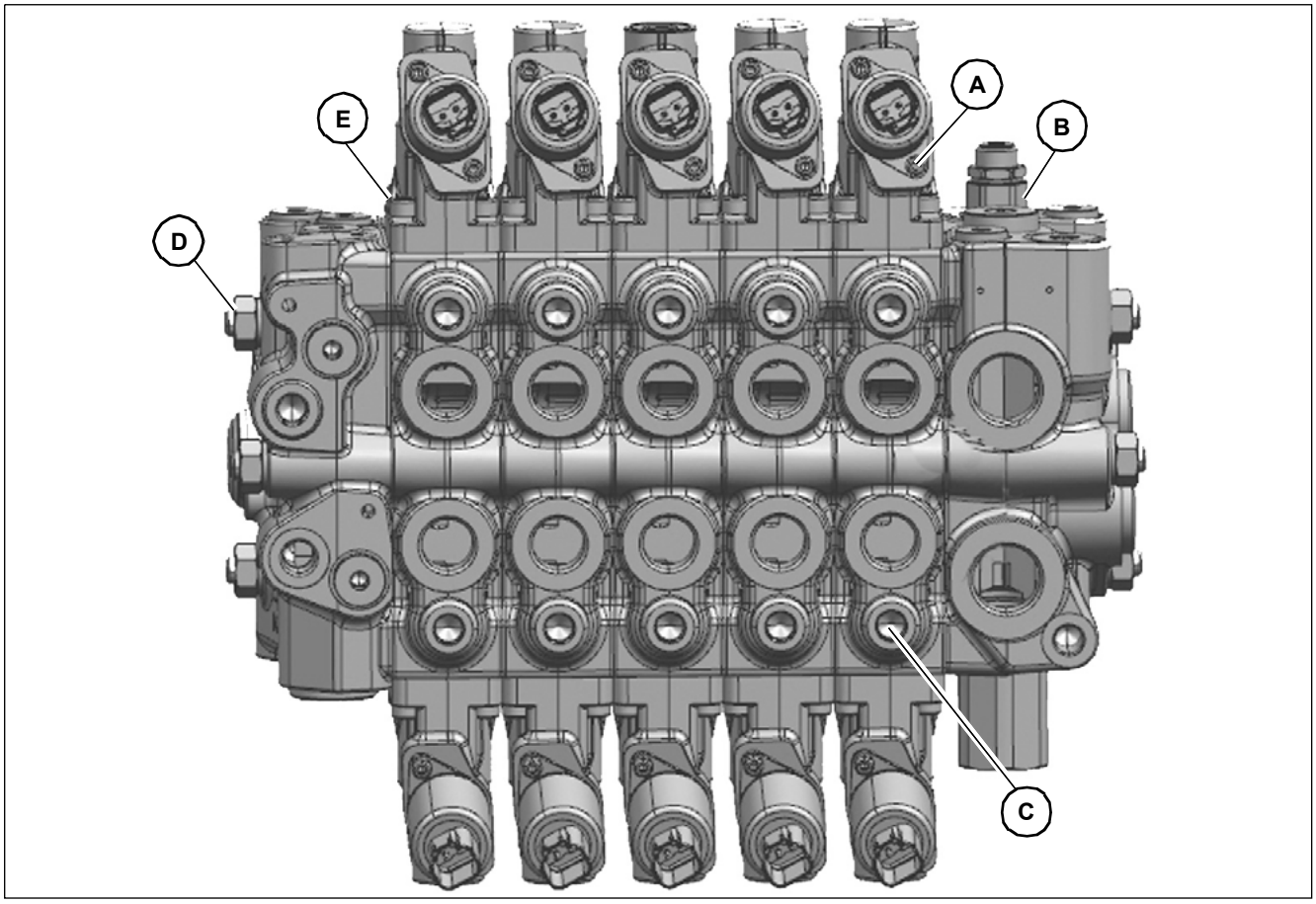

Pos.	Component	Tightening torque	Remarks
A	Proportional valve	4 Nm (3 ft.lb)	hexagon socket screw3
B	Pressure relief valve	30 Nm (22.1 ft.lb)	WS 20
C	Secondary valves	30 Nm (22.1 ft.lb)	hexagon socket screw10
D	Tension anchor	30 – 35 Nm (22.1 – 25.8 ft.lb)	WS 13
E	Valve block	13 Nm (9.6 ft.lb)	Hexagon socket 5

8.5 Raising/lowering boom with load stabiliser

Overview: raising/lowering with load stabiliser

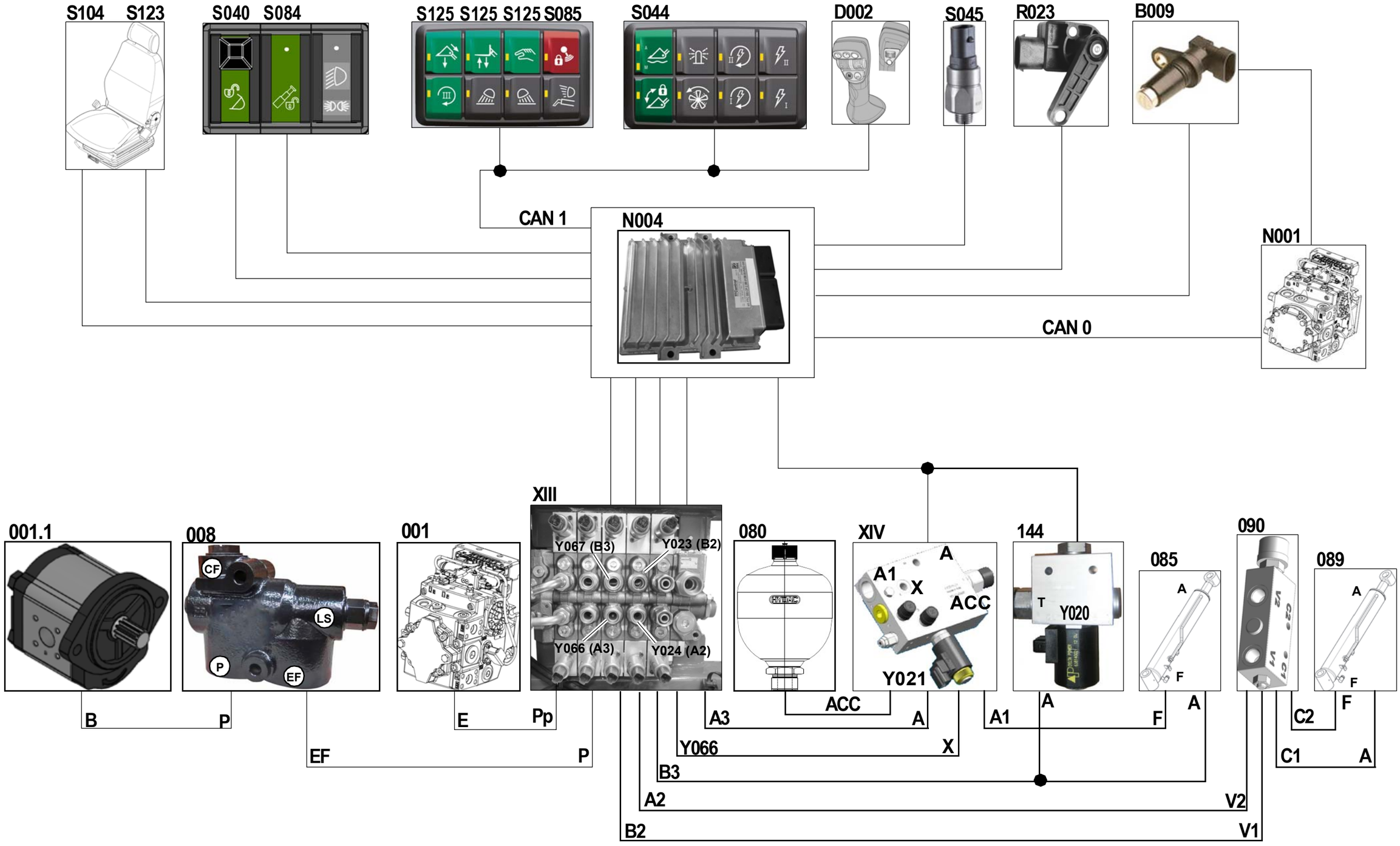

Description: raising/lowering with load stabiliser

Hydraulic components

Pos.	Component	Remarks
XIII	Main control unit (hydraulics)	HDS24
XIV	Hose burst valve with load stabiliser	–
001	Boost pump	12 ccm/U (0.732 in³)
001.1	Constant pump work hydraulics	36 ccm/U (2.196 in³)
008	Priority valve	–
077	Pilot control pressure accumulator	210 bar (3045.79 psi)
080	Pressure accumulator	330 bar (4786.25 psi)
085	Lift cylinder	–
089	Push-out cylinder	–
090	Hose burst valve for push-out ram	–
144	Connecting valve to tank (load stabiliser on rod side of lift cylinder de-pressurized)	–
166	Lift ram hose burst valve without load stabilizer	–

Electric elements

B009	Speed sensor	5 V
D002	Joystick	CAN 1
N001	Drive electronics	H1 AC control
N004	Controller	HY-TTC 580-CP
R023	Boom angle sensor	5 V
S040	Touch button for unlocking emergency lowering	5 V
S044	Load stabiliser button	CAN 1
S045	Load stabiliser pressure switch	–
S084	Hydraulics cut-off tip switch	CAN 1
S085	Touch button for lock for long-haul travel	CAN 1
S104	Operator presence switch	–
S123	Seat belt contact switch	–
S125	Lowering mode switch	CAN 1
Y020	Load stabiliser solenoid valve	5,7 Ω
Y021	Load stabiliser solenoid valve	6,5 Ω
Y023	Proportional valve (retract)	4,7 Ω
Y024	Proportional valve (extend)	4,7 Ω
Y066	Proportional valve (raise)	4,7 Ω
Y067	Proportional valve (lower)	4,7 Ω

Pos.	Component	Designation
CAN1	CAN1 – Work hydraulics	–
CAN0	CAN0 – Drive	–

Hydraulic control unit XIII

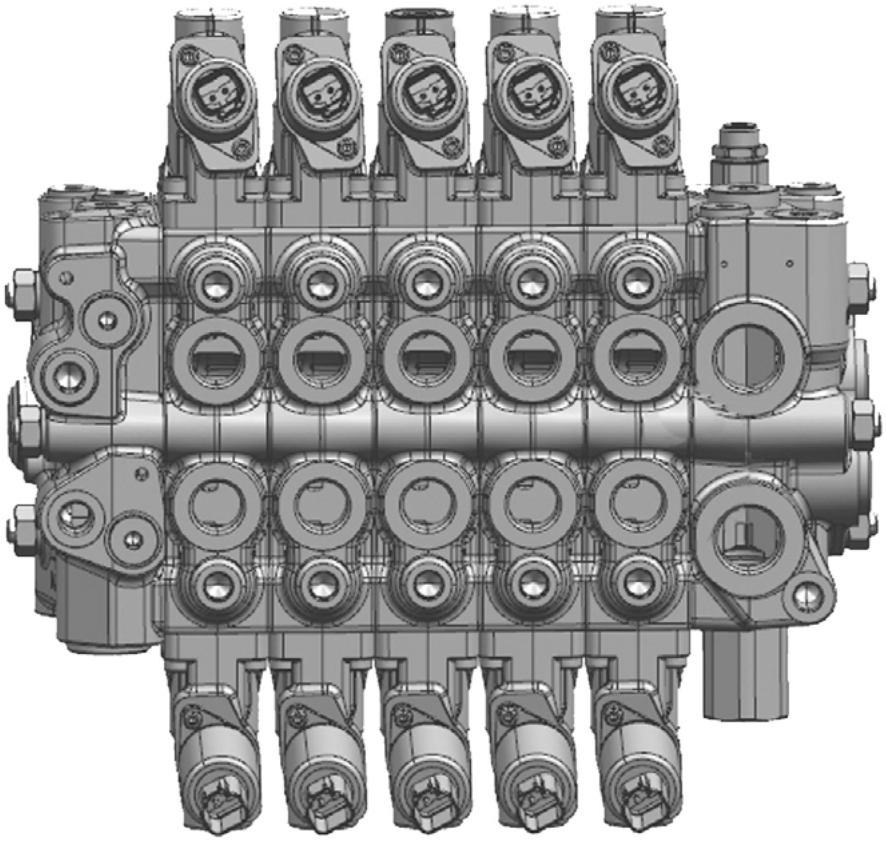

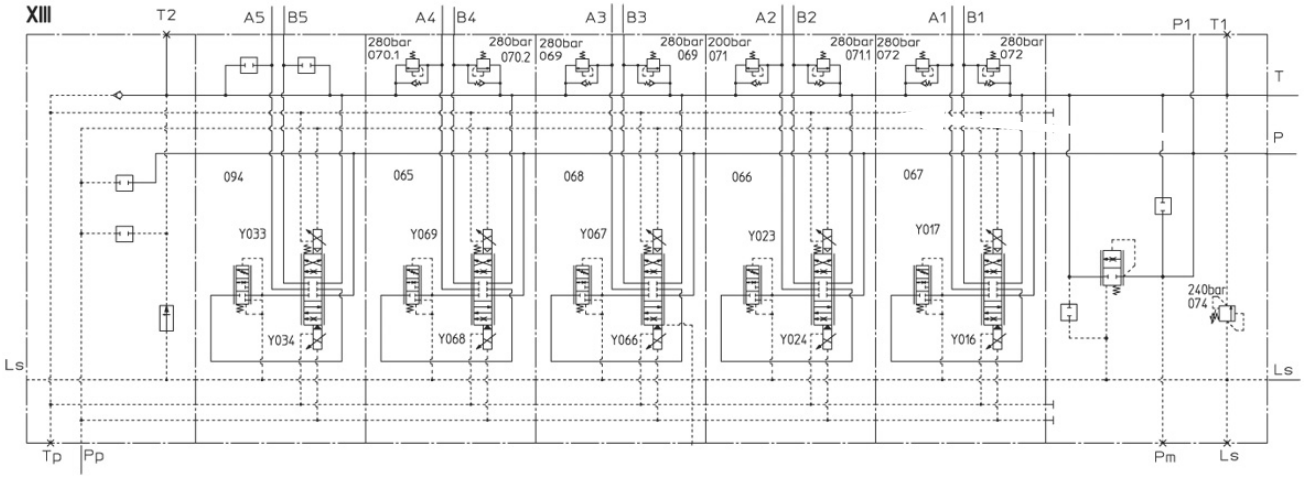

Hydraulic control unit XIII

Hydraulic control units **XIII** from four to five sections will be used. Section 5 does not have a secondary valve.

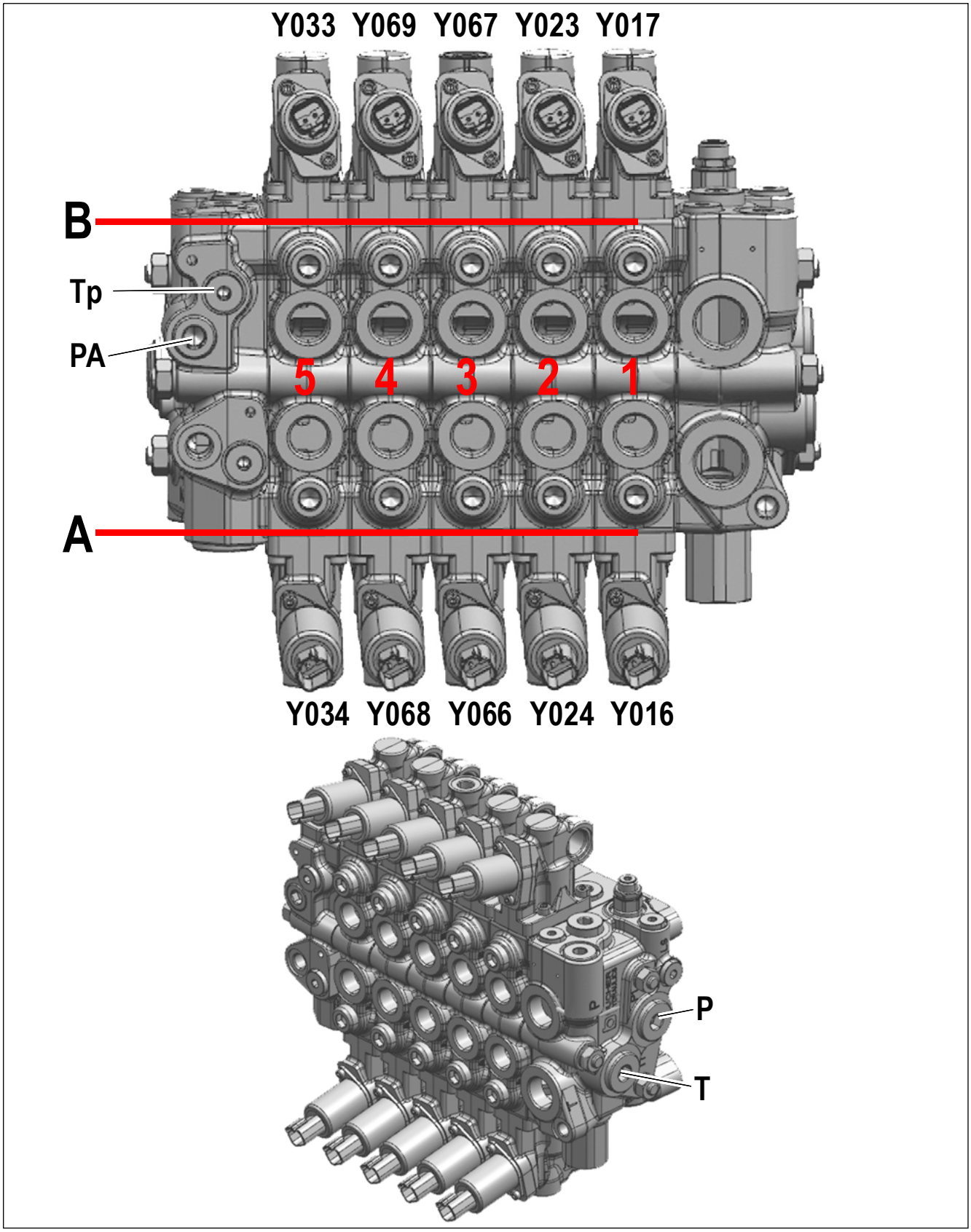

Description: control unit XIII

Pos.	Component	Remarks
A	Port designation on control valve XIII	Section 1–5 bottom side
B	Port designation on control valve XIII	Section 1–5 rod side
P	Work hydraulics pump I	36 ccm/U (2.196 in³)
PA	Pilot control (boost pressure)	Approx. 30 bar (435.10 psi)
T	Tank recirculation via the return filter	–
Tp	Tank venting for the pilot caps	–
Y016	Lock proportional valve (Section 1)	PWM 4.7 Ω
Y017	Unlock proportional valve (Section 1)	PWM 4.7 Ω
Y023	Retract proportional valve (Section 2)	PWM 4.7 Ω
Y024	Extend proportional valve (Section 2)	PWM 4.7 Ω
Y033	Proportional valve additional circuit (Section 5)	PWM 4.7 Ω
Y034	Proportional valve additional circuit (Section 5)	PWM 4.7 Ω
Y066	Raise proportional valve (Section 3)	PWM 4.7 Ω
Y067	Lower proportional valve (Section 3)	PWM 4.7 Ω
Y068	Tilt back proportional valve (Section 4)	PWM 4.7 Ω
Y069	Tip out proportional valve (Section 4)	PWM 4.7 Ω

Valves from hydraulic control unit XIII

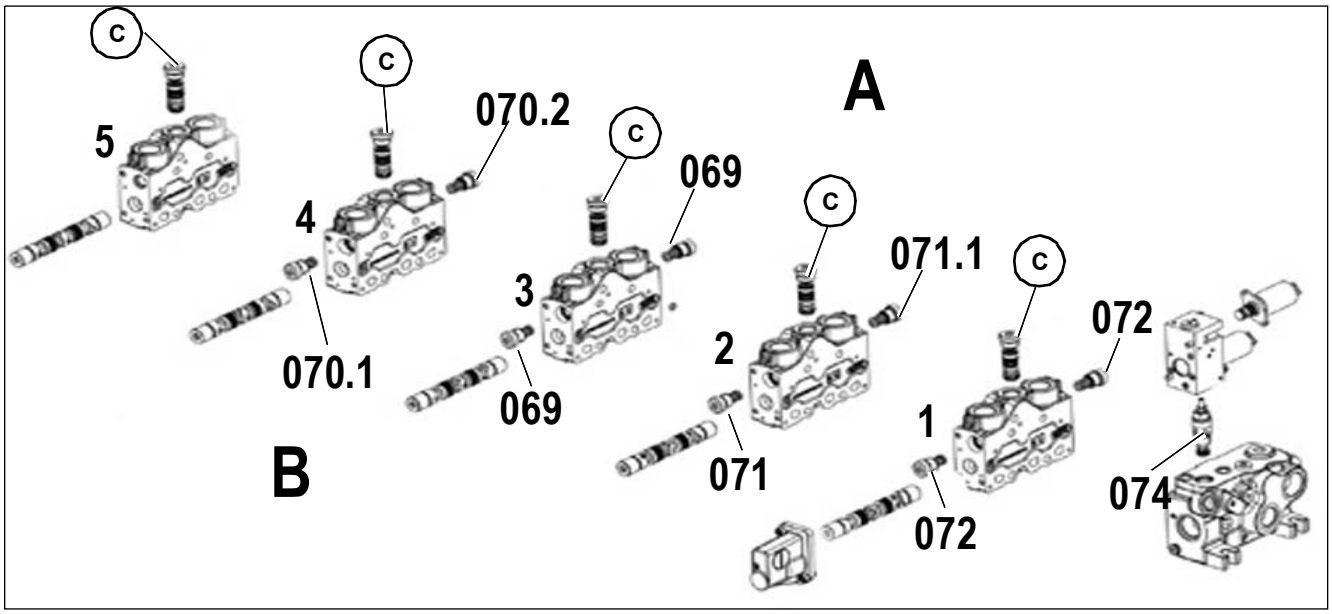

Description: control unit XIII

Pos.	Component	Remarks
1	3rd control circuit section 067	80 l/min (21.10 US gpm)
2	Push-out ram section 066	A2 – 100 l/min (26.4 US gpm) B2 – 80 l/min (21.10 US gpm)
3	Lift ram section 068	100 l/min (26.4 US gpm)
4	Tilt ram section 065	A4 – 100 l/min (26.4 US gpm) B4 – 80 l/min (21.10 US gpm)
5	Section rear additional control circuit Hitch/Tipper 094	80 l/min (21.10 US gpm)
A	Port designation on control valve XIII	Section 1–5 bottom side
B	Port designation on control valve XIII	Section 1–5 rod side
C	Pressure compensators	–
069	Secondary valve for raise lifting cylinder (B)	270–290 bar (3916–4206 psi)
069	Secondary valve for lower lifting cylinder (A)	270–290 bar (3916–4206 psi)
070.1	Secondary valve for tipping cylinder rod side fill shovel (A)	270–290 bar (3916–4206 psi)
070.2	Secondary valve for tipping cylinder bottom side empty shovel (B4)	270–290 bar (3916–4206 psi)
071	Secondary valve for push-out ram Extend bottom side (B)	190–210 bar (2755–3045 psi)
071.1	Secondary valve for push-out ram Retract rod side (A)	270–290 bar (3916–4206 psi)
072	Secondary valve 3rd control circuit, lock/unlock (A/B)	270–290 bar (3916–4206 psi)
074	LS pressure relief valve	240 bar (3480.91 psi)

Gear pump working hydraulics I

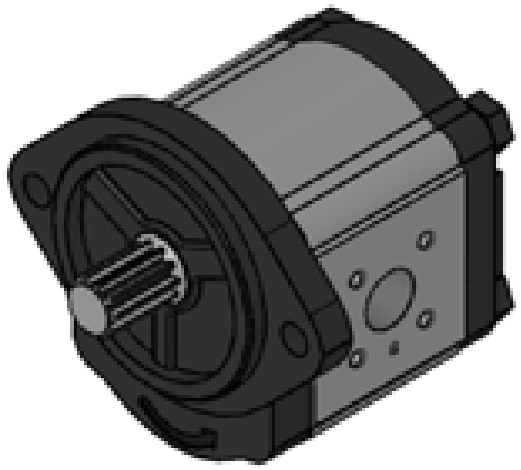

Component	Remarks	System pressure
I	36 ccm/U (2.196 in³)	230–250 bar (2320.6 – 2755.72 psi)

Function description

The gear pump for working hydraulics **I** supplies the steering orbitrol **IV** and the main control unit **XIII** with oil via the priority valve **008**. The oil flow is filtered by a high-pressure filter **167** directly after the gear pump **I**.

Priority valve 008

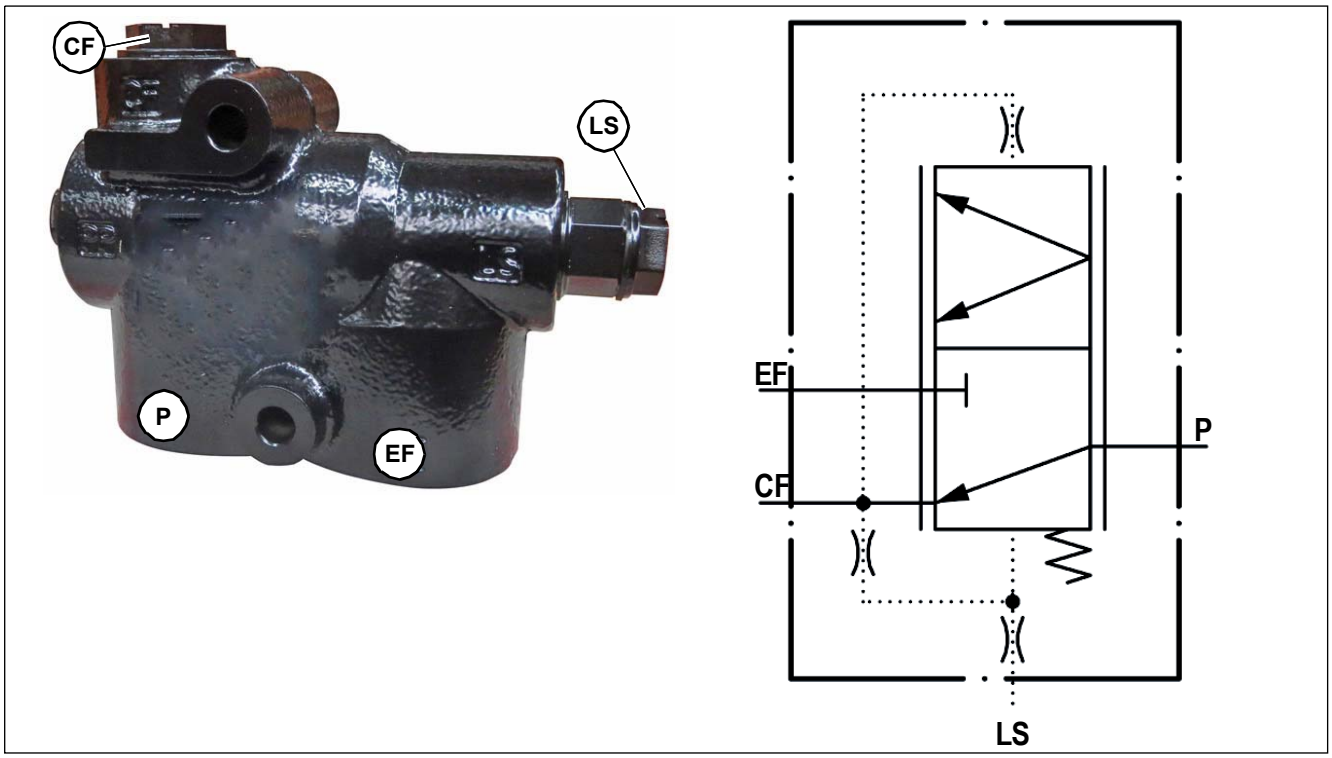

Connection	Power supply
P	Input from gear pump, working hydraulics **I**
LS	Input from steering orbitrol **IV**, port **LS**
CF	Output to steering orbitrol **IV**, port **P**
EF	Output to main control unit **XIII**, port **P1**

Function description

The priority valve **008** is responsible for dividing the oil flow from the gear pump work hydraulics **I into** the steering system and work hydraulics. Here, the oil is primarily supplied to the steering system**IV**.

Function

The oil flow coming from the gear pump **I** passes through port **P** and an internal duct of the priority valve **008** to the control spool. The control spool is then pushed against the spring via the area ratio and the oil flow is distributed evenly between the steering orbitrol **IV** and the main control unit **XIII**..

As soon as the steering orbitrol **IV** is actuated it generates an LS signal, which acts on the control spool of the priority valve **008**. Through the combination of the spring force and the LS signal the control spool is pushed back towards the initial position and the steering assumes priority. This can mean that functions of the working hydraulics are executed more slowly during steering.

Pressure accumulator 077

Important information

Membrane and hydraulic accumulators are pressure tanks in accordance with the European Pressure Equipment Directive 97/23/EC. Hydraulic accumulators are exclusively for the purpose of accumulating and discharging hydraulic fluids. Membrane or hydraulic accumulators consist of a fluid and a gas section with a membrane as gas-tight separating element.

DANGER

If the pressure accumulator is not filled correctly there is a risk of explosion! If pressure accumulators are filled with oxygen or air, they can explode!

This can result in serious injuries or even death.

► Only fill pressure accumulators with nitrogen.

Information

No welding or mechanical work may be carried out on the pressure accumulator!

We recommend checking the pretensioning pressure annually. This inspection may only be carried out by a skilled person with the respective qualification!

Component	Function	Remarks
077	Pilot control pressure accumulator	Gas filling overpressure 10 bar (145 psi)

Function description

Pressure accumulator **077** is the supply pressure for the pilot control. If the diesel engine fails this ensures that an emergency lowering manoeuvre can be carried out. It is also needed in order to release pressure from the individual control circuits.

Pressure accumulator 080

Important information

Membrane and hydraulic accumulators are pressure tanks in accordance with the European Pressure Equipment Directive 97/23/EC. Hydraulic accumulators are exclusively for the purpose of accumulating and discharging hydraulic fluids. Membrane or hydraulic accumulators consist of a fluid and a gas section with a membrane as gas-tight separating element.

DANGER

If the pressure accumulator is not filled correctly there is a risk of explosion! If pressure accumulators are filled with oxygen or air, they can explode!

This can result in serious injuries or even death.

► Only fill pressure accumulators with nitrogen.

Information

No welding or mechanical work may be carried out on the pressure accumulator!

We recommend checking the pretensioning pressure annually. This inspection may only be carried out by a skilled person with the respective qualification!

Component	Function	Remarks
080	Load stabiliser pressure accumulator	Gas filling pressure 35 bar (507,63 psi)

Function description

The pressure accumulator **080** is connected to the load stabiliser **XIV** via port **ACC**. The pressure accumulator **080** is activated via the load stabiliser solenoid valve **Y021**.

If the load stabiliser solenoid valve **Y021** is energized by controller **N004**, the bottom side of the lift cylinder **085** is connected with the pressure reservoir **080**.

Hose burst valve with load stabiliser XIV

DANGER

No adjustments may be made to any hose burst valves.

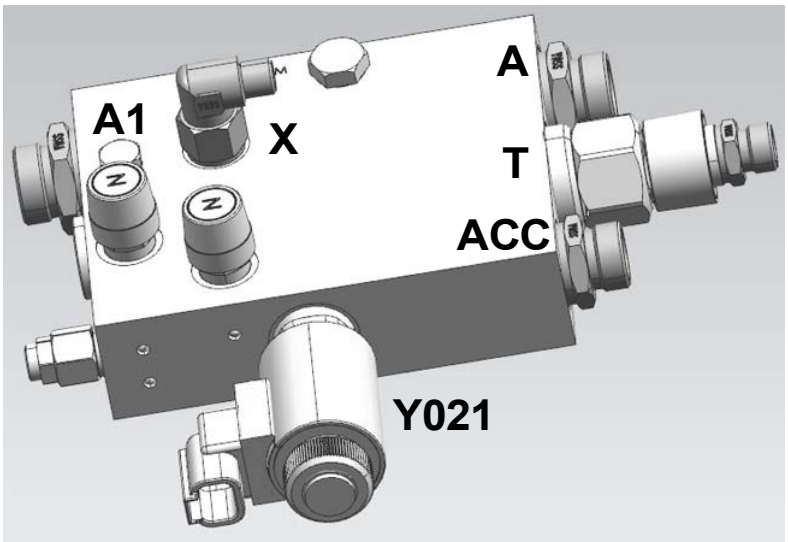

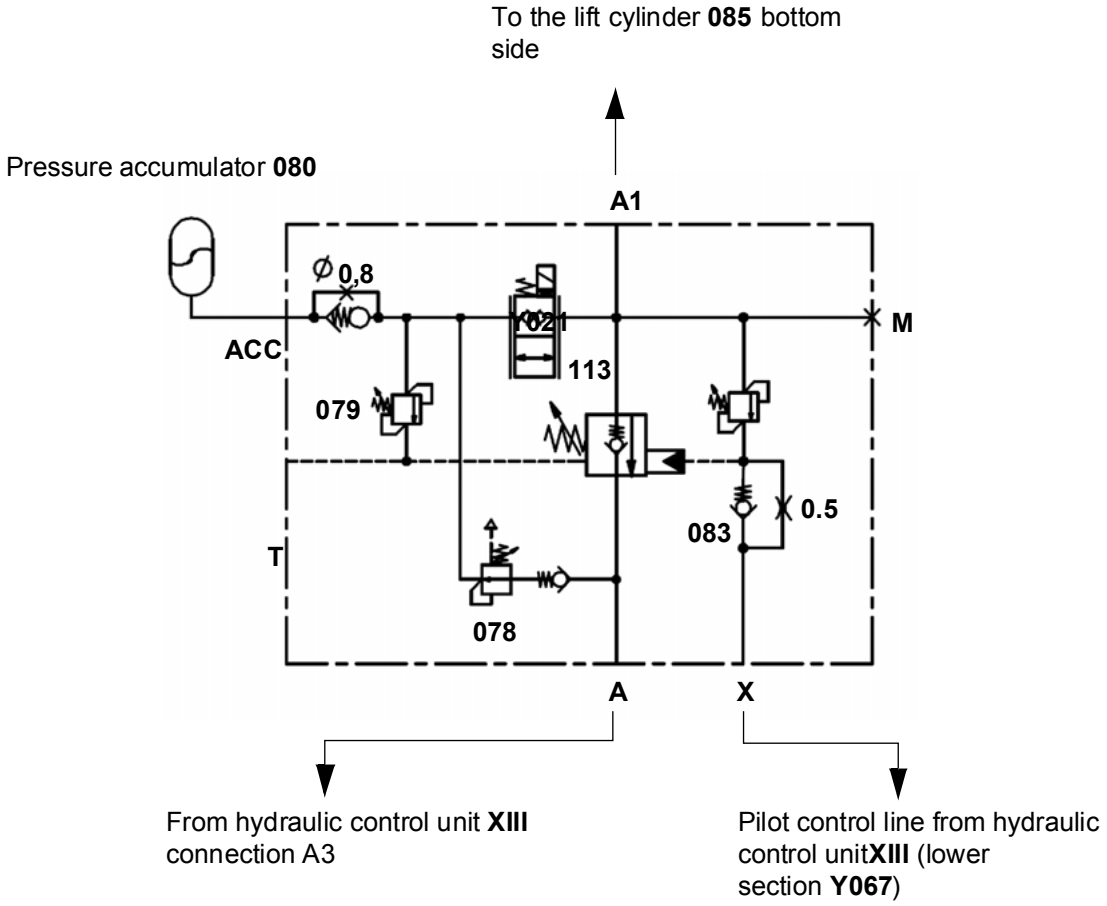

Description: hose burst valve with load stabiliser XIV

Connection	Power supply
A	Input from hydraulic control unit **XIII** A3
A1	Output from lifting cylinder **085** (bottom side)
ACC	Input pressure accumulator **080**
X	Input of the hydraulic control unit **XIII** (lower section **Y067**) pilot control
M	Locked
T	Output to tank **XX**

Component	Function
078	Pre-load valve 110 bar (1595.42 psi)
079	Pressure relief valve 280 bar (4061 psi)
083	Non-return valve
113	Valve for connecting a piston-type accumulator 080 with the bottom side of the lift cylinder **085**

Component	Function	Remarks
Y021	Solenoid valve for load stabiliser is energized when the load stabiliser is switched on.	12 Volt 5.4 Ω

Functional description: hose burst valve with load stabiliser XIV

Valve **XIV** covers on the one hand the hose burst valve function at lifting cylinder **085** and on the other it is activated for the boom via switch **S044**. The hose burst valve prevents the boom from falling down in the event of a break in the line on the bottom side of lifting cylinder **085**. In addition, the load stabiliser is switched on with solenoid valve **Y021**.

Hose burst valve function

When raising the boom, the volume flow coming from control unit **XIII** (connection A3)) can flow to connection A at valve **XIV** via a non-return valve to the floor side of the lifting cylinder **085** . To lower the boom, a volume flow rate from the bottom side of lifting cylinder **085** has to flow back to control unit **XIII**. This flow direction is initially blocked by the non-return valve in valve **XIV**. In an intentional lowering of the boom, the pilot control pressure for lowering is conveyed to connection X in valve **XIV**. This controls the non-return valve **083** and the volume flow is released from **A1** to **A**, thus lowering the telescopic arm. In addition, a secondary valve also releases this flow direction in the event of an external load that is too heavy or a shock load.

Load stabiliser

The load stabiliser is activated via switch **S044**. Solenoid valve **Y021** is supplied with power in order for it to be activated. This opens valve **113** and releases the line between the floor side of the lifting cylinder **085** and the pressure accumulator **080**. When the valve **113** is closed, the floor side of the lifting cylinder **085** is separated from the pressure accumulator **080** and the load stabiliser is deactivated. The pressure reservoir **080** is preloaded with a pressure of 110 bar (1595.42 psi). This means that the boom can no longer be lowered. Via the pressure release valve **078**, a volume flow can flow from connection **A** into the lift cylinder until the pressure of 110 bar (1595.42 psi) has been reached. The pressure relief valve **079** relieves the pressure from the pressure reservoir **080** by up to 280 bar (4061 psi). In particular when valve **113** is closed, a pressure overload caused by a temperature rise of the pressure reservoir **080** is regulated and discharge via connection **T** to the tank **XX**. In order to avoid accidental lowering of the boom should the hydraulic line between valve **XIV** and pressure accumulator **080** break, additional protection is provided for at connection **ACC**. The non-return valve (additional protection) which closes if the volume flow to the pressure accumulator **080** is too great, prevents the boom from falling.

Hose burst valve without load stabiliser 166

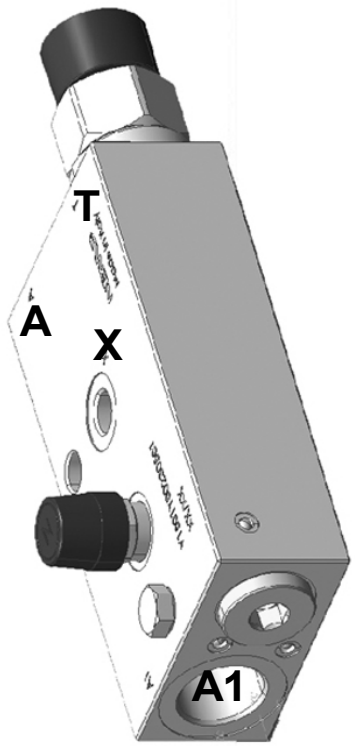

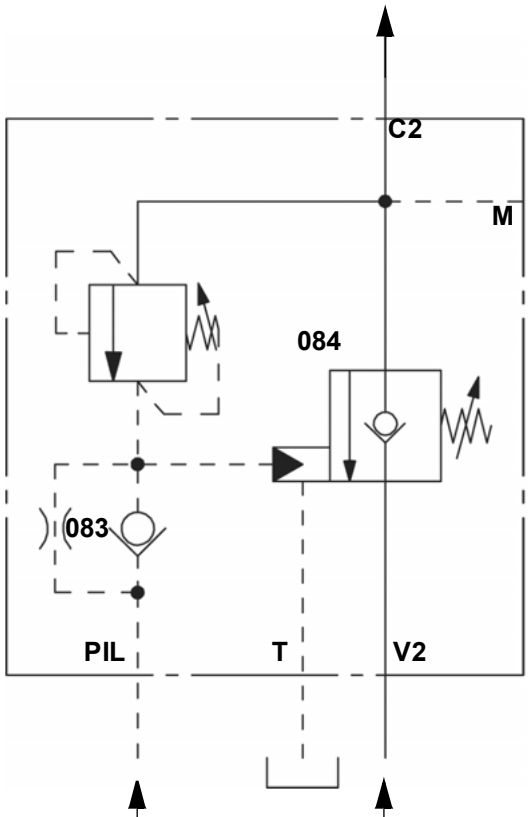

Connection	Power supply
A (V2)	Input from hydraulic control unit **XIII** A4
A1 (C2)	Output from lifting cylinder **085** (bottom side)
PIL	Input from hydraulic control unit **XIII** (lower section **Y067**)
M	Locked
T	Output to tank **XX**

Component	Function
083	Non-return valve
084	Upstream non-return valve

Functional characteristics: hose burst valve without load stabiliser 166

Valve **166** covers the hose burst valve function at the lift cylinder **085**. The hose burst valve prevents the boom from falling down in the event of a break in the line on the bottom side of lifting cylinder **085**.

Function

When lifting the telescopic arm, the volume flow from the control unit **XIII** (connection **A3**) coming from **A** to **A1** in valve **166** can flow via the non-return valve **084.** To lower the boom a volume flow must be enabled from the bottom side of lifting cylinder **085** back to control unit **XIII**. This flow direction is initially blocked by the non-return valve **084** in valve **166**. For an intentional lowering of the telescopic arm, the pilot control pressure for lowering is conveyed to connection **X** on valve **166**. Via a non-return valve **083** this controls the non-return valve **084** and the volume flow from **A1** to **A** is released, thereby lowering the telescopic arm. In addition, a secondary valve also releases this flow direction in the event of an external load that is too heavy or a shock load.

Hose burst valve for push-out ram 090

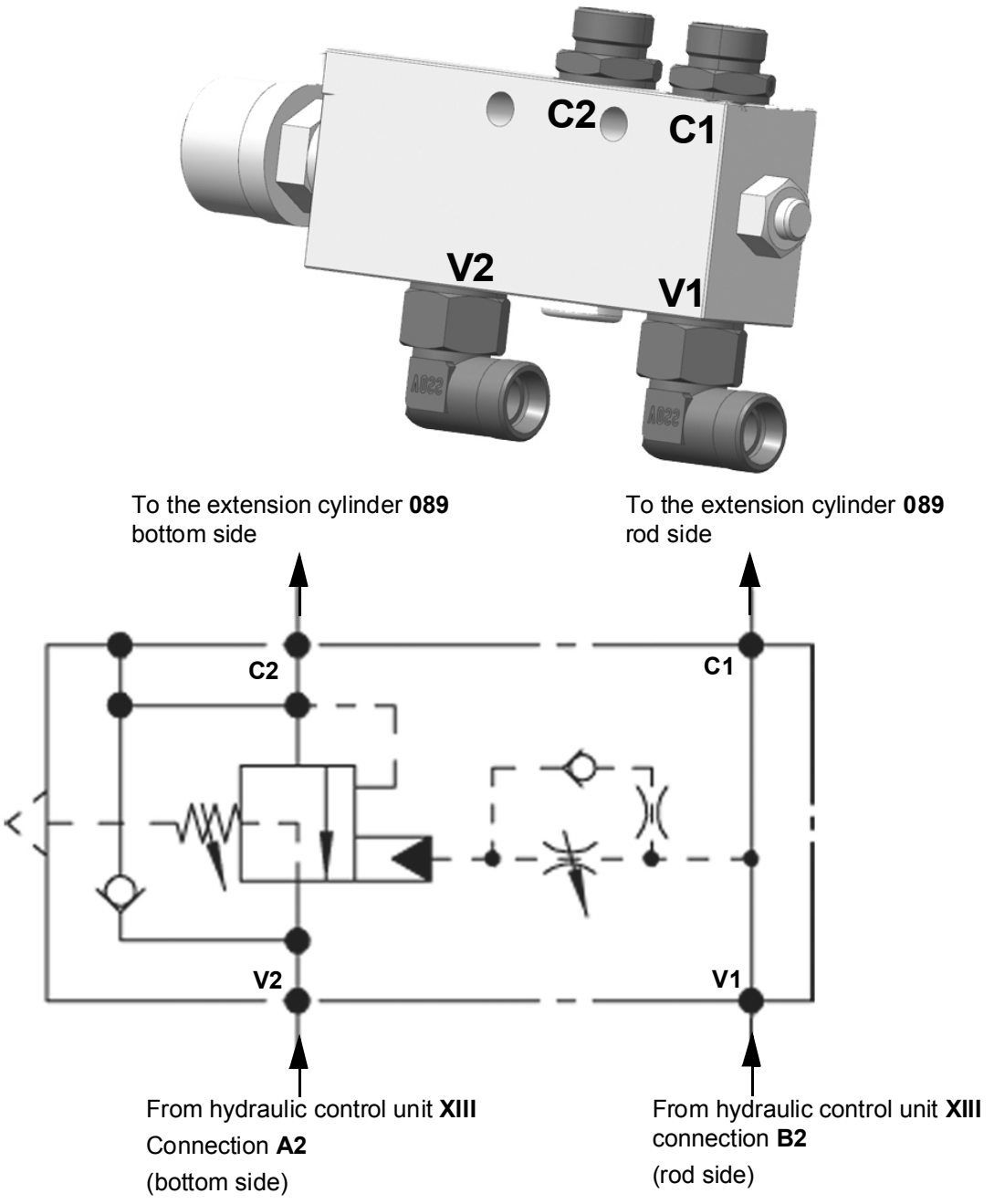

Connection	Power supply
C1	Output to push-out ram **089** (rod side)
C2	Output to push-out ram **089** (bottom side)
V1	Input from hydraulic control unit **XIII** (B2)
V2	Input from hydraulic control unit **XIII** (A2)

Functional characteristics: hose burst valve for extension cylinder 090

Valve **090** covers the hose burst valve function at the push-out ram **089**. The hose burst valve prevents the load from being retracted in the event of a break in the line on the bottom side of the push-out ram **089**.

Function

When the telescopic arm is extend, the volume flow coming from the control unit **XIII** (connection **A2**) from connection **A** to **A1** in valve **090** can flow via the non-return valve. To tilt in the boom a volume flow must be enabled from the bottom side of the push-out ram **089** back to control unit **XIII**, this flow direction is initially blocked by the non-return valve in valve **090**. In an intentional retraction manoeuvre, the pressure on the rod side of the push-out ram **089** opens the valve. The control pressure for the opening process is applied by a throttle and dissipated via a non-return valve in order to reduce vibrations.

A secondary valve is additional integrated into valve **090**. In the event of external loads that are too heavy or a shock load that would cause too high a pressure being exerted on the bottom side of push-out ram **089**, the hose burst valve is also opened until the peak pressure has dissipated.

Relief valve for load stabiliser 144 Y020)

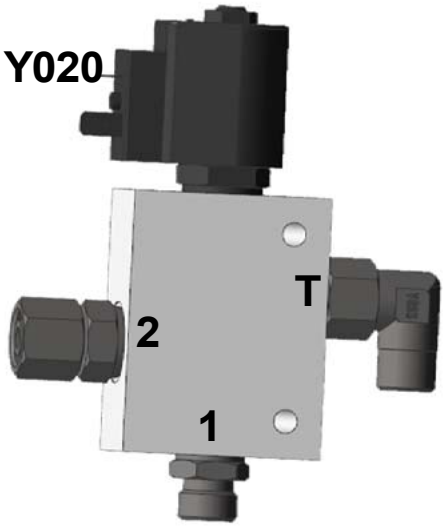

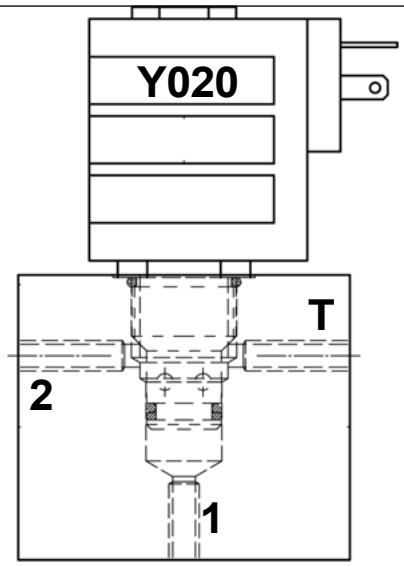

From the lift cylinder **085** (rod side connection)

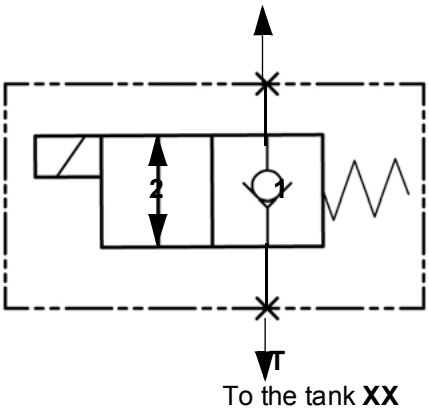

To the tank **XX**

Connection	Power supply
1	From lifting cylinder **085** (rod side)
2	Solenoid valve **Y020** energized with lift cylinder 085 (rod side) connected
T	Connection to the tank
Y020	Solenoid valve, load stabiliser **Y020**

Function description

The solenoid valve **Y020** is supplied with voltage by the load stabiliser switch **S044**. When the machine is at standstill, solenoid valve **Y020** is not energised. It establishes a connection between lifting cylinder **085** (rod side) and tank **XX**. This enables the boom to move upwards freely.

Speed sensor B009, variable displacement motor

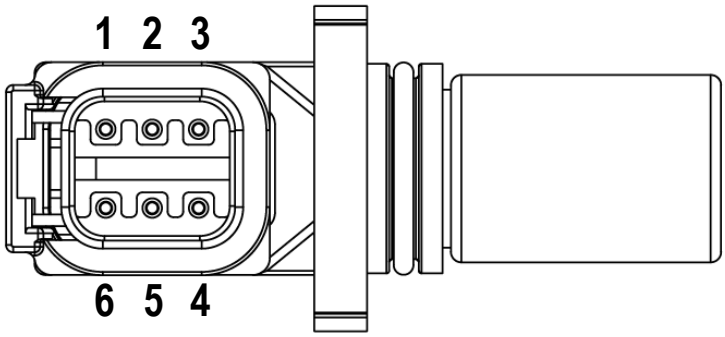

PIN	Connection	to PIN	Measuring range
1	Output to traction electronics **N001**	CC1 (5)	Signal 2 frequency
2	Output to traction electronics **N001**	CC2 (4)	Direction of rotation signal (0 – 5 V)
3	Output to traction electronics **N004**	XE15 (1-50)	Signal 1 speed (5 V)
4	Input from traction electronics **N001**	CC1 (8)	5 V
5	Input from traction electronics **N001**	CC1 (9)	Sensor ground
6	–	–	–

Function description

The speed sensor **B009** takes up the revolutions on the drive shaft in the variable displacement motor. The drive electronics **N001** process the signal for speed display, speed limiter, and load stabiliser.

Joystick D002

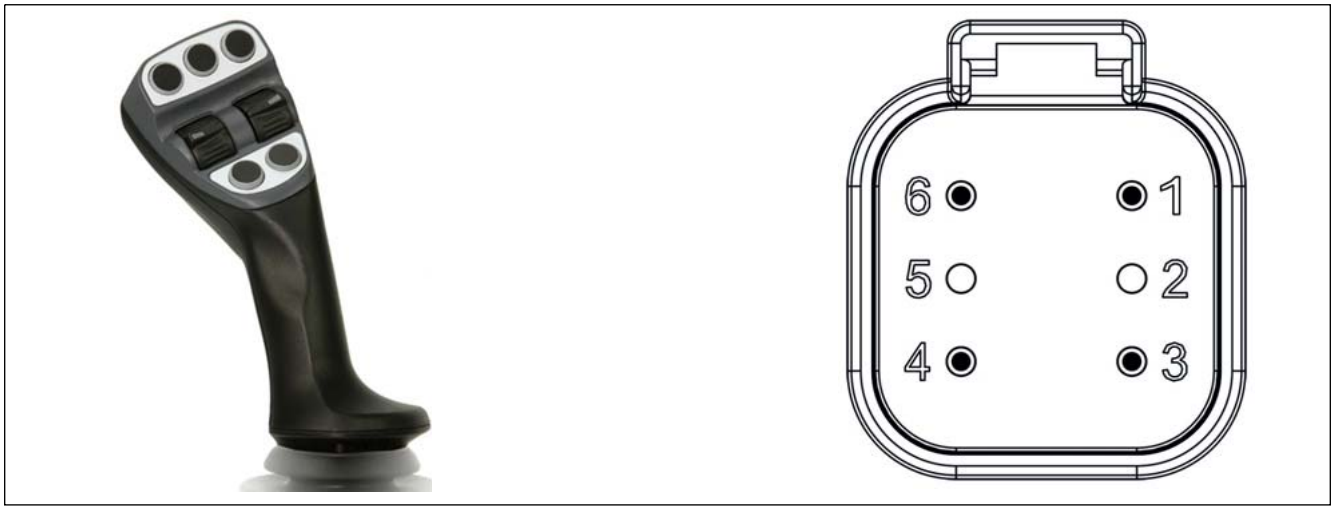

Pin assignment of Joystick D002

PIN	Connection	Measuring range
1	Ground (KL31)	Ground/cab
2	Voltage supply F010/3 A (KL30)	12 V
3	Switched voltage supply F032/5 A (KL15)	12 V
4	–	–
5	CAN 1	low
6	CAN 1	high

Description of joystick D002 (version 1)

Functional characteristics of joystick (handle)

The joystick is used to operate the loader unit as well as various additional functions.

The loader unit can only be completely operated by the control lever if:

1. the seat contact switch is actuated (operator in the seat)
2. Starter ON
3. the diesel engine is on
4. Lock for long-haul travel **S085** off

Front side of joystick D002

Pos.	Component	Function
A	Tip switch **S066**	The drive is deactivated (neutral)
B	Roller **S034/035**	Forward/reverse travel
C	Tip switch **S135**	Reduce speed level e.g. from hare to turtle
D	Tip switch **S136**	Increase speed level e.g. from turtle to hare
E	Tip switch **S110**	Reversing valve (front telescopic arm)
F	Roller **S038/039**	Extend/retract telescopic arm
G	Tip switch **S092**	Bucket repositioning

Reverse of joystick D002

Pos.	Component	Function
H	Roller **S030/031**	Unlock/lock third control circuit
I	Tip switch **S025**	Differential lock (**Y009**)

Description of joystick D002 (version 2)

Functional characteristics of joystick (handle)

The joystick is used to operate the loader unit as well as various additional functions.

The loader unit can only be completely operated by the control lever if:

1. the seat contact switch is actuated (operator in the seat)
2. Starter ON
3. the diesel engine is on
4. Lock for long-haul travel **S085** off

Front side of joystick D002

Pos.	Component	Function
A	Tip switch **S109**	Operation of electric circuit 1 of the 7-pole Front power outlet
B	Roller **S034/035**	Forward/reverse drive and neutral
C	Tip switch **S135**	Reduce speed level e.g. from hare to turtle
D	Tip switch **S136**	Increase speed level e.g. from turtle to hare
E	Tip switch **S110**	Reversing valve (front telescopic arm)
F	Roller **S038/039**	Extend/retract telescopic arm
G	Tip switch **S092**	Bucket repositioning

Reverse of joystick D002

Pos.	Component	Function
H	Roller **S030/031**	Unlock/lock third control circuit
I	Tip switch **S025**	Differential lock (**Y009**)

Angle or rotational sensor R023

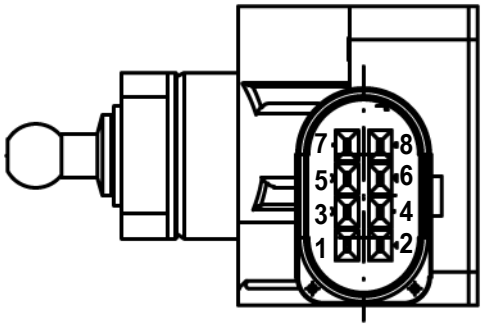

PIN	Connection	to PIN	Measuring range
1	Input from controller N004	XE04 (2-34)	5 V
2	Output to controller N004	XE15 (1-05)	Signal 1 (4.5 – 0.5 V)
3	–	–	–
4	Input from controller N004	XE04 (2-34)	5 V
5	Output to controller N004	XE15 (1-29)	Signal 2 (0.5 – 4.5 V)
6	–	–	–
7	Input to controller N004	XE04 (2-30)	Ground
8	Input to controller N004	XE04 (2-17)	Ground

Function description

The lifting arm monitoring potentiometer **R023** and the strain gauge strips load sensor **B008** determine the load limit via a tube characteristic in order to prevent an overload.

The boom monitoring potentiometer is needed for limit position damping. The speed of the telescopic arm is reduced via the tube characteristic within a range of 3-6° in front of the end stop.

If the boom is moved without a command from the joystick **D002**, the boom angle sensor **R023** detects a change. This triggers an error message in the display **P011**.

The working range is 0 –66°, the calibration for a completely lowered telescopic arm.

Voltage values for 0°

- Signal 1 = 2.127 V
- Signal 2 = 2.855 V

Voltage values for 66°

- Signal 1 = 4.200 V
- Signal 2 = 0.770 V

Touch button S040 - quick hitch system lock

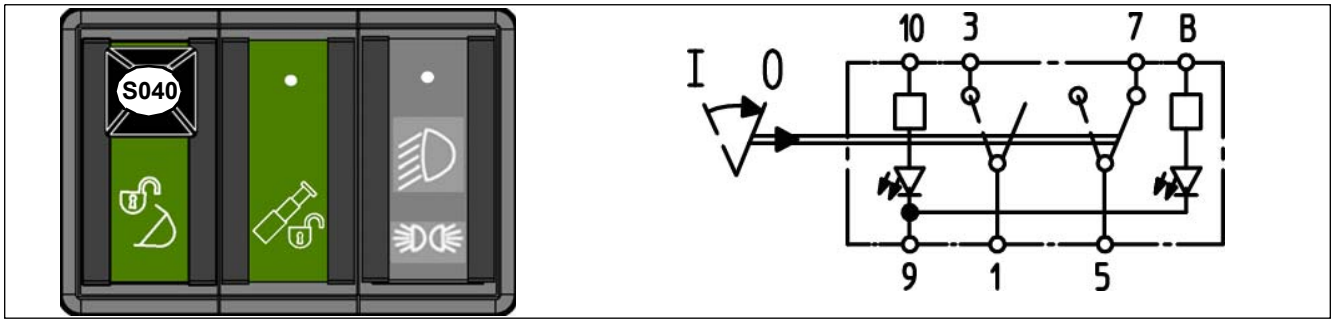

PIN	Connection	to PIN	Measuring range	
			not actuated	Actuated
1	Output to controller N004	XE15 (1-17)	0 V	5 V
3	Input from controller N004	XE04 (2-21)	5 V	5 V
5	Output to controller N004	XE15 (1-41)	5 V	0 V
7	Input from controller N004	XE04 (2-21)	5 V	5 V
9	Lighting ground (cab)	–	–	–
10	Board voltage lighting F018/10 A	–	12 V	12 V
B	Lighting for control	–	0 V	5 V

Function description

With the touch button **S040** quick coupler system lock, the functions quick coupler system unlock **Y025,** emergency lowering via lowering **Y067** and auto hitch lock **Y047** are controlled. In order to be able to used the touch button **S040**, the operator must be in the seat.

Touch button S044 – load stabiliser in the keypad D004

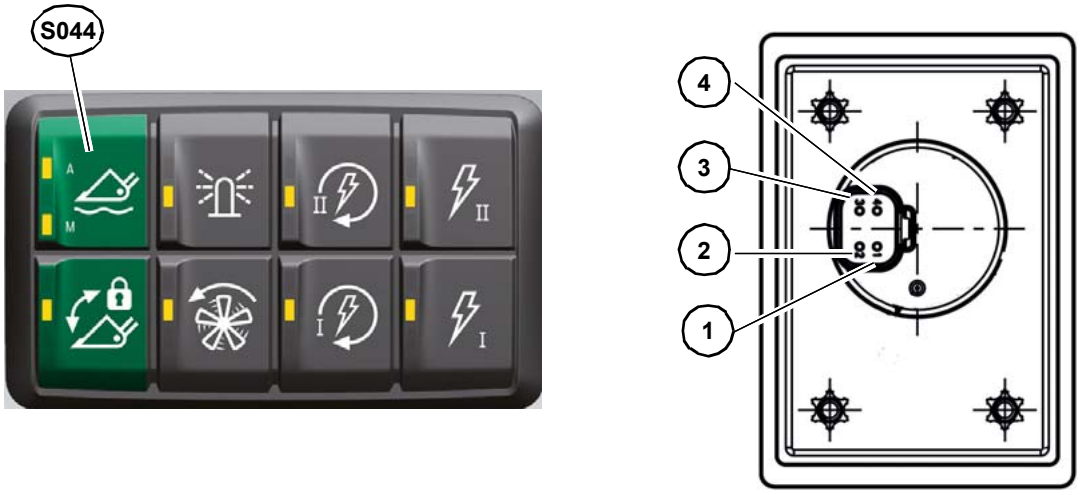

PIN	Connection	Measuring range
1	Voltage supply F032/5 A	12 V
2	Ground	Cabin
3	CAN 1	high
4	CAN 1	low

Function description

The load stabiliser can be switched of via the touch button **S044** in either continuous or automatic function. The load stabiliser is used to damp the boom in order to ensure smooth handling even at high speeds. If the function is active, the touch button **S044** lights up.

Continuous function is switched on

With the touch button **S044** on the keypad **D004** a CAN message (CAN1) is sent to controller **N004**. From controller **N004**, the solenoids **Y020**/ **Y021** are energized with 12 V.

The PIN 1-77 outlet on the controller **N004** energizes the solenoid **Y020** (2)

The PIN 1-56 outlet on the controller **N004** energizes the solenoid **Y021** (2)

Automatic function

The load stabiliser is activated from a speed of 7 km/h.

The signal from the speed sensor **B009** is sent from the traction electronics **N001** to the controller **N004** via CAN 0. From 7 km/h, solenoids**Y020 Y021**are supplied with 12 V by the controller **N004**.

The PIN 1-77 outlet on the controller **N004** energizes the solenoid **Y020** (2).

The PIN 1-56 outlet on the controller **N004** energizes the solenoid **Y021** (2).

Load stabiliser pressure switch S045

Switching off of load stabiliser when filling shovel

The load stabiliser is automatically switched on when a pressure of 150 bar (2175.6 psi) is applied to pressure switch **S045**. The pressure switch **S045** is built into the working ling of tipping cylinder **087** (A4 bottom side).

The reason for switching off

For the parallel guidance of the attachment tools, the tipping cylinder **087** is directly connected with the compensating cylinder **086**. In other words, the oil that is displaced by the lifting movements (raising/lowering) on the compensating cylinder **086** ends up in the tipping cylinder **087**.

If the load stabiliser is switched on, the lift cylinder **085** (A3 bottom side) is connected with the pressure reservoir **080**. The (B3 rod side) of the lift cylinder **085** with the tank **XX**. If the tipping cylinder **087** is tipped against the detent, the compensating cylinder **086** is simultaneously loaded with pressure on the bottom side. The compensating cylinder **086** can now lift the loader unit because the lift cylinder **085** on the (B3 rod side) is connected to the tank **XX**. In order to prevent this, for a pressure of 150 bar at the tipping cylinder **087** (A4 bottom side) via the pressure switch **S045**, the load stabiliser is switched off. The lift cylinder **085** is thus locked again, and lifting by tipping is no longer possible.

Touch button S084 - hydraulic shut-down

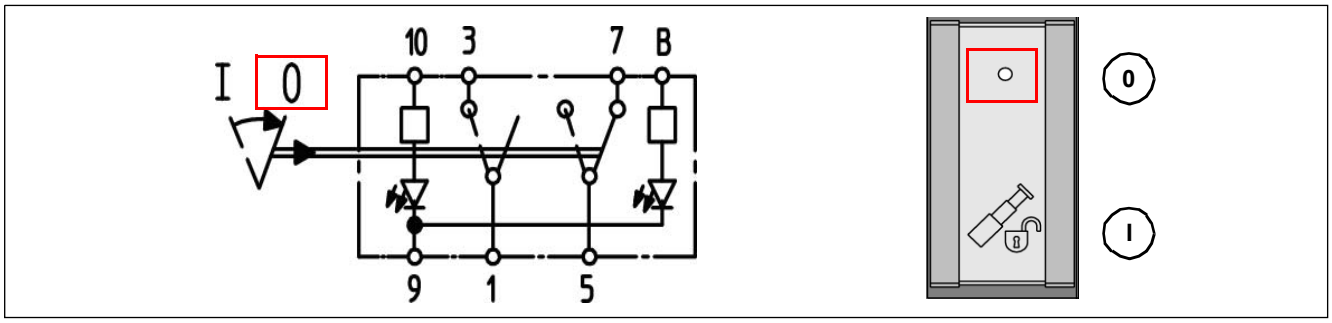

PIN	Connection	to PIN	Measuring range	
			not actuated (0)	actuated (I)
1	Output to controller N004	XE15 (1-16) S084 (B)	–	5 V
3	Input from controller N004	XE04 (2-21)	5 V	5 V
5	Output to controller N004	XE15 (1-40)	5 V	–
7	Input from controller N004	XE04 (2-21)	5 V	5 V
9	Lights	–	Earth (cab)	Earth (cab)
10	Lighting F018/10 A	–	12 V	12 V
B	Lighting for control	–	0 V	5 V

- ➥ If button **S084** is pressed in bucket mode, retraction of the boom is stopped.
- ➥ If button **S084** is pressed in fork-lift mode, retraction is stopped during lowering of the boom.
- ➥ If the touch button **S084** is actuated in manual mode, the lowering movement is continued with reduced speed.

Function description

When pressed, the touch button **S084** switches off the overload limit up to 60 s. The functions will then be controlled normally again.

In the case of an error, the bucket mode becomes active. Combined movements are stopped.

Touch button S085 – lock for long-haul travel in the keypad D003

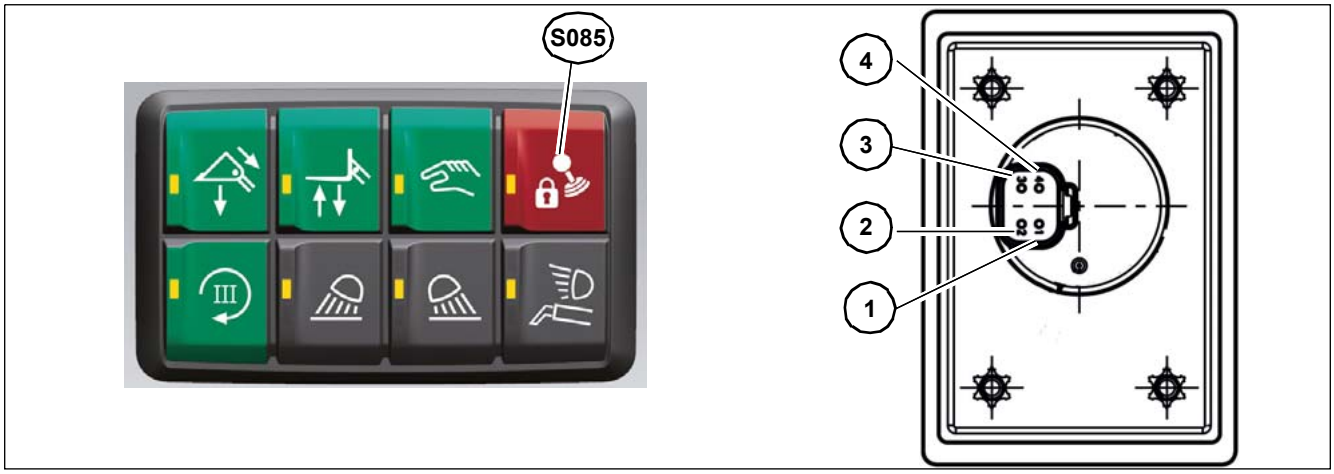

PIN	Connection	Measuring range
1	Voltage supply F032/5 A	12 V
2	Ground	Cabin
3	CAN 1	high
4	CAN 1	low

Function description

When the road travel lock function switch **S085** is switched to road travel lock ON, no hydraulic functions can be actuated. If the function is active, the touch button **S085** lights up.

Joystick shut-down switched on

With the touch button **S085** on the keypad **D003** a CAN message (CAN1) is sent to controller **N004**. The controller **N004** deactivates all outputs to the proportional valves on the control unit. In addition, all circuits of the 14-pole plug receptacle are deactivated.

Operator presence switch S104

The seat contact switch **S104** is composed of two switches that have been put into a single casing.

Driver not seated on the seat

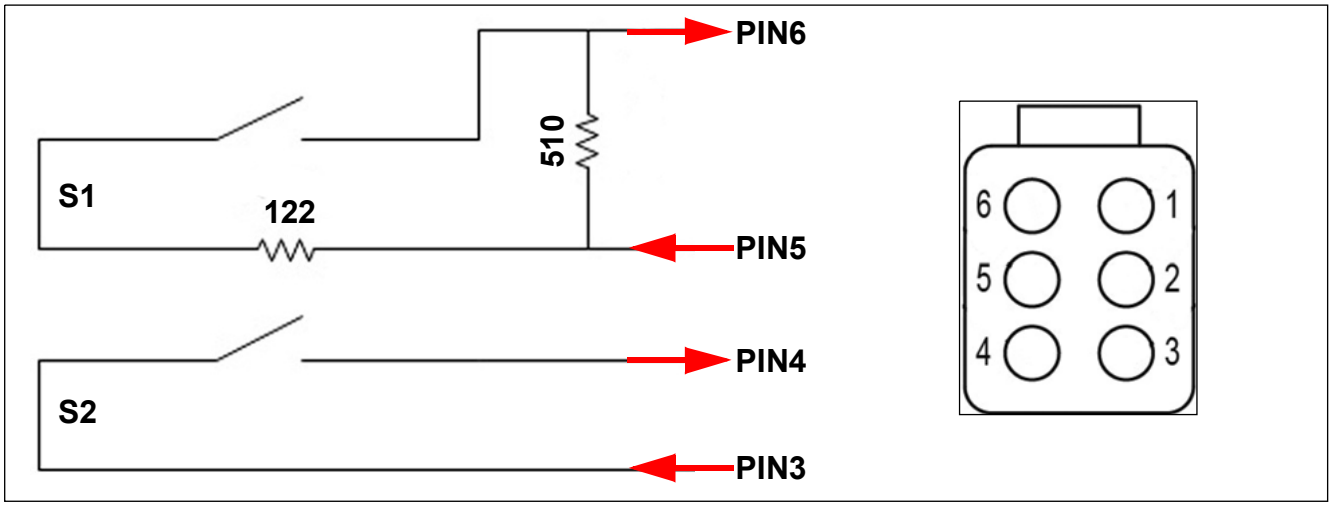

PIN	Connection	To PIN	Measuring range
1	Board voltage F038/25A (for air cushioned seat option)	–	12 V
2	Ground	Cabin	Ground
3	On-board voltage F014/5A	–	12 V
4	Signal to controller N004	XE15 (1-39)	0 V
5	Output from controller N004	XE15 (1-04)	12 V
6	Signal to controller N004	XE04 (2-44)	2 – 3 V

Operator not on seat when the function starts

Seat contact switch open

- Diesel engine cannot be started.
- The travel direction cannot be selected.

The following proportional valves are not energized.

1. Raising **Y066,** lowering **Y067** of telescopic arm
2. Fill shovel **Y068,** Empty shovel **Y069**
3. Retraction **Y023,** extension **Y024** of telescopic arm
4. Locking**Y016,** unlocking **Y017**
5. Solenoid valve for quickhitch lock **Y025**

Upper/lower rear additional control circuit

1. Raising **Y044** or lowering **Y045** tipper or raising **Y044** or lowering **Y045** auto hitch
2. Auto hitch tipper switch-over **Y046**
3. Unlock auto hitch **Y047**

Operator not in seat during active function

The following valves remain energized, even when the operator leaves the seat during the activated function.

Upper/lower rear additional control circuit

1. Raising **Y044** or lowering **Y045** tipper or raising **Y044** or lowering **Y045** auto hitch
2. Auto hitch tipper switch-over **Y046**
3. Locking permanent function of third control circuit **Y016**
4. Solenoid valve for changeover of front 4th control circuit **Y051**
5. PTO solenoid valve **Y120**
6. Rear hitch solenoid valves **Y117**, **Y118**, **Y129**

If the operator leaves the seat for longer than 3 s, the following functions will be stopped.

1. Retraction **Y023,** extension **Y024** of telescopic arm
2. Raising **Y066,** lowering **Y067** of telescopic arm
3. Fill shovel **Y068,** Empty shovel **Y069**
4. Locking**Y016,** unlocking **Y017**
5. If the lowering function**Y067** is still active after 3 s, the lowering speed is throttled in relation to the driving speed until the standstill of the lowering movement.
6. Below a speed of 7 km/h (4.3 mph), the drive is switched into neutral if the operator leaves the seat for more than 5 s.
7. If the driving speed is below 0.5 km/h (0.3 mph), after 1 s, it will be switched to neutral and a warning tone will sound.
8. A warning signal sounds at speeds over 7 km/h (4.3 mph)

Driver seated on the seat

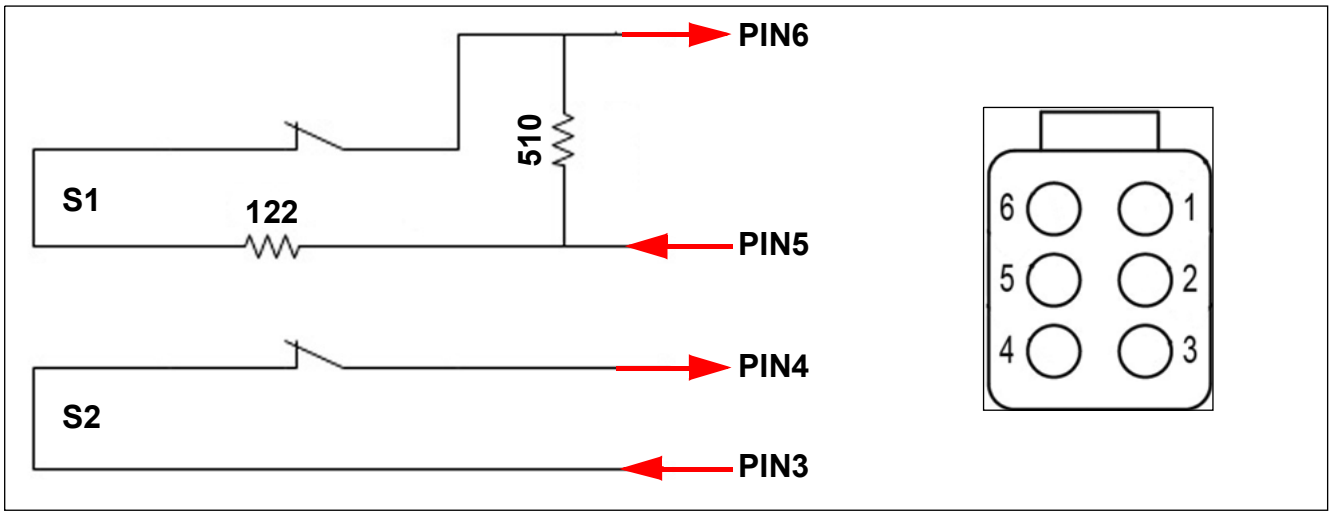

PIN	Connection	To PIN	Measuring range
1	Board voltage F038/25A (for air cushioned seat option)	–	12 V
2	Ground	Cabin	Ground
3	On-board voltage F014/5A	–	12 V
4	Signal to controller N004	XE15 (1-39)	12 V
5	Output from controller N004	XE15 (1-04)	12 V
6	Signal to controller N004	XE04 (2-44)	5 – 7 V

If a voltage of 5–7 V is applied to plug XE15 (1-04) and a voltage of 12 V to plug XE15 (1-39), the operator is in the operator's seat.

Seat contact switch closed

The vehicle can be used to its full extent

Machine runs without the driver on the seat

➥ The valves for the additional control circuits continue to be energised but have to be switched on before (operator on the seat)

If the operator leaves the seat for longer than 3 s, the following functions will be stopped.

1. Retraction **Y023,** extension **Y024** of telescopic arm
2. Raising **Y066,** lowering **Y067** of telescopic arm
3. Fill shovel **Y068,** Empty shovel **Y069**
4. Locking**Y016,** unlocking **Y017**
5. If the lowering function**Y067** is still active after 3 s, the lowering speed is throttled in relation to the driving speed until the standstill of the lowering movement.
6. Below a speed of 7 km/h (4.3 mph), the drive is switched into neutral if the operator leaves the seat for more than 5 s.
7. If the driving speed is below 0.5 km/h (0.3 mph), after 1 s, it will be switched to neutral and a warning tone will sound.
8. A warning signal sounds at speeds over 7 km/h (4.3 mph)

Belt contact switch S123 (option)

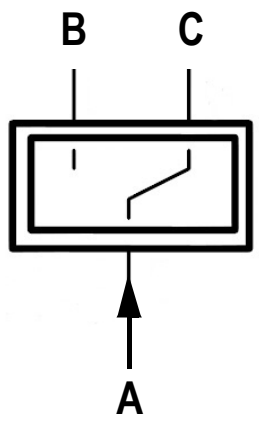

PIN	Connection	KCN (PIN)	Measuring range	
			buckled in	Not buckled in
A	On-board voltage F014/5A	–	12 V	12 V
B	Input to controller N004	XE15 (1-15)	10 V	0 V
C	Output to switching relay K110	K110 (86)	0 V	12 V

Seat belt not fastened

- Diesel engine cannot be started.
- The travel direction cannot be selected.

The following proportional valves are not energized.

1. Raising **Y066,** lowering **Y067** of telescopic arm
2. Fill shovel **Y068,** Empty shovel **Y069**
3. Retraction **Y023,** extension **Y024** of telescopic arm
4. Locking**Y016,** unlocking **Y017**
5. Solenoid valve for quickhitch lock **Y025**

Upper/lower rear additional control circuit

1. Raising **Y044** or lowering **Y045** tipper or raising **Y044** or lowering **Y045** auto hitch
2. Auto hitch tipper switch-over **Y046**

- Unlock auto hitch **Y047**

Touch button S125 – manual mode in the keypad D003

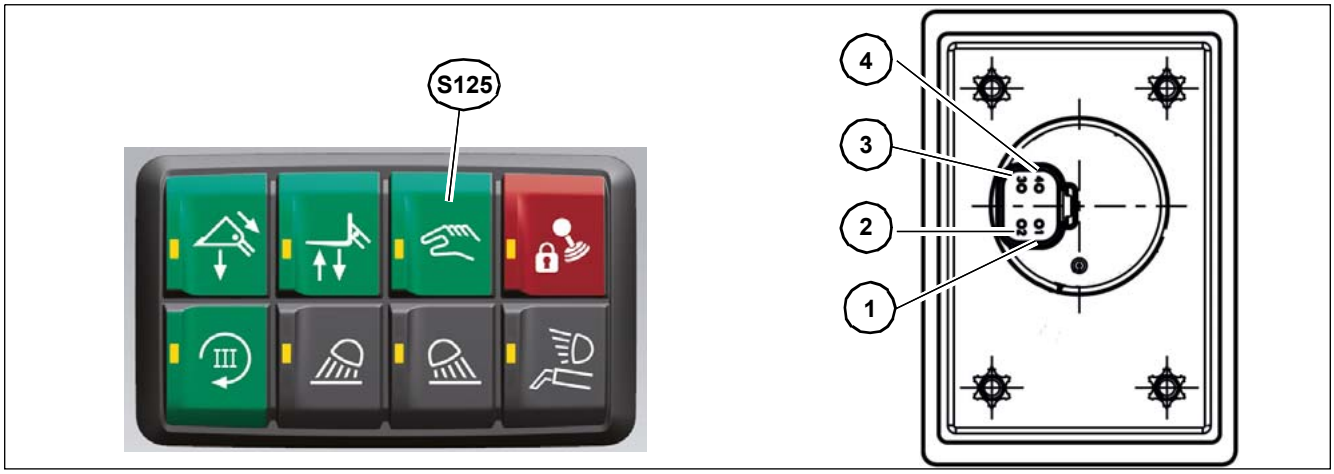

PIN	Connection	Measuring range
1	Voltage supply F032/5 A	12 V
2	Ground	Cabin
3	CAN 1	high
4	CAN 1	low

Function description

In manual mode, no combined movements can be executed. If the function is active, the touch button **S125** lights up.

Raise boom

Using the joystick **D002**, a CAN message is transmitted to controller **N004.** The controller **N004** controls the raise proportional valve **Y066** via a tube characteristic. The characteristic curve is influenced by the angle.

Raising in manual mode in the event of an overload

The raise function is always activated. If the roller for inner boom **S038** (extend) is actuated, the function stops when the load limit has been reached. Through the two-hand operation with the touch button **S084** is it possible to extend the telescopic arm further.

Lower boom

The lowering speed is determined in relation to the angel and the load.

If the load is only just below the load limit during the lowering movement, the lowering speed is decreased to standstill. To continue lowering, the boom has to be retracted. The telescopic arm can also be lowered via a two-hand operation with touch button **S084**.

Touch button S125 – stacking mode in the keypad D003

PIN	Connection	Measuring range
1	Voltage supply F032/5 A	12 V
2	Ground	Cabin
3	CAN 1	high
4	CAN 1	low

Function description

In fork-lift mode, 2 functions are always executed during the raising/ lowering processes. These functions are raise &extend and lower & retract. If the function is active, the touch button **S125** lights up.

This enables a vertical movement (vertical raising/lowering).

Raising in fork-lift mode

Using the joystick **D002**, a CAN message is transmitted to the controller **N004.** The controller **N004** controls the raising **Y066** and extending **Y024** proportional valve via a tube characteristic. The characteristic curve is influenced by the angle.

Lowering in fork-lift mode

Using the joystick **D002**, a CAN message is transmitted to the controller **N004**. The controller **N004** controls the lower **Y067** and retract **Y023** proportional valves via a tube characteristic. The characteristic curve is influenced by the angle.

Lowering in fork-lift mode in the event of an overload

In the event of an overload, the boom is retracted quicker. If the push-out ram is operated additionally via the roller **S038** (extend), then the extend function goes into overload and the boom retracts automatically.

The hose burst valve **XV** for the lifting cylinder **085** is opened during the lowering function via the pilot control pressure.

Touch button S125 – shovel mode in the keypad D003

PIN	Connection	Measuring range
1	Voltage supply F032/5 A	12 V
2	Ground	Cabin
3	CAN 1	high
4	CAN 1	low

Function description

In bucket mode, when lowered, boom retraction is faster than lowering speed. If the function is active, the touch button **S125** lights up.

The lifting cylinder **085** is controlled by section A3/B3 of the hydraulic control unit **XIII**. The raise function is secured via the hose burst valve **XV**. Pressure relief is provided via the shock extraction (secondary valves) **069** in the hydraulic control unit **XIII** from the lifting circuit.

Raising in bucket mode

Using the joystick **D002**, a CAN message is transmitted to the controller **N004.** The controller **N004** controls the raise proportional valve **Y066** via a tube characteristic.

Raising in bucket mode in the event of an overload

The raise function is always activated. If the boom segment with roller **S038** (extend) is operated, the function is stopped as soon as the load limit is reached.

Lowering in bucket mode

Using the joystick **D002**, a CAN message is transmitted to the controller **N004.** The controller **N004** controls the lower **Y067** and retract **Y023** proportional valves via a tube characteristic.

The hose burst valve **XV** for the lifting cylinder **085** is opened during the lowering function via the pilot control pressure.

Lowering in bucket mode in the event of an overload

An overload cannot happen as the boom always retracts when it is being lowered.

If the push-out ram is operated additionally via the roller **S038** (extend), then the extend function goes into overload and the boom retracts automatically.

8.6 Control of tipping cylinder/tipping cylinder lock

Overview: control of tipping cylinder/tipping cylinder lock

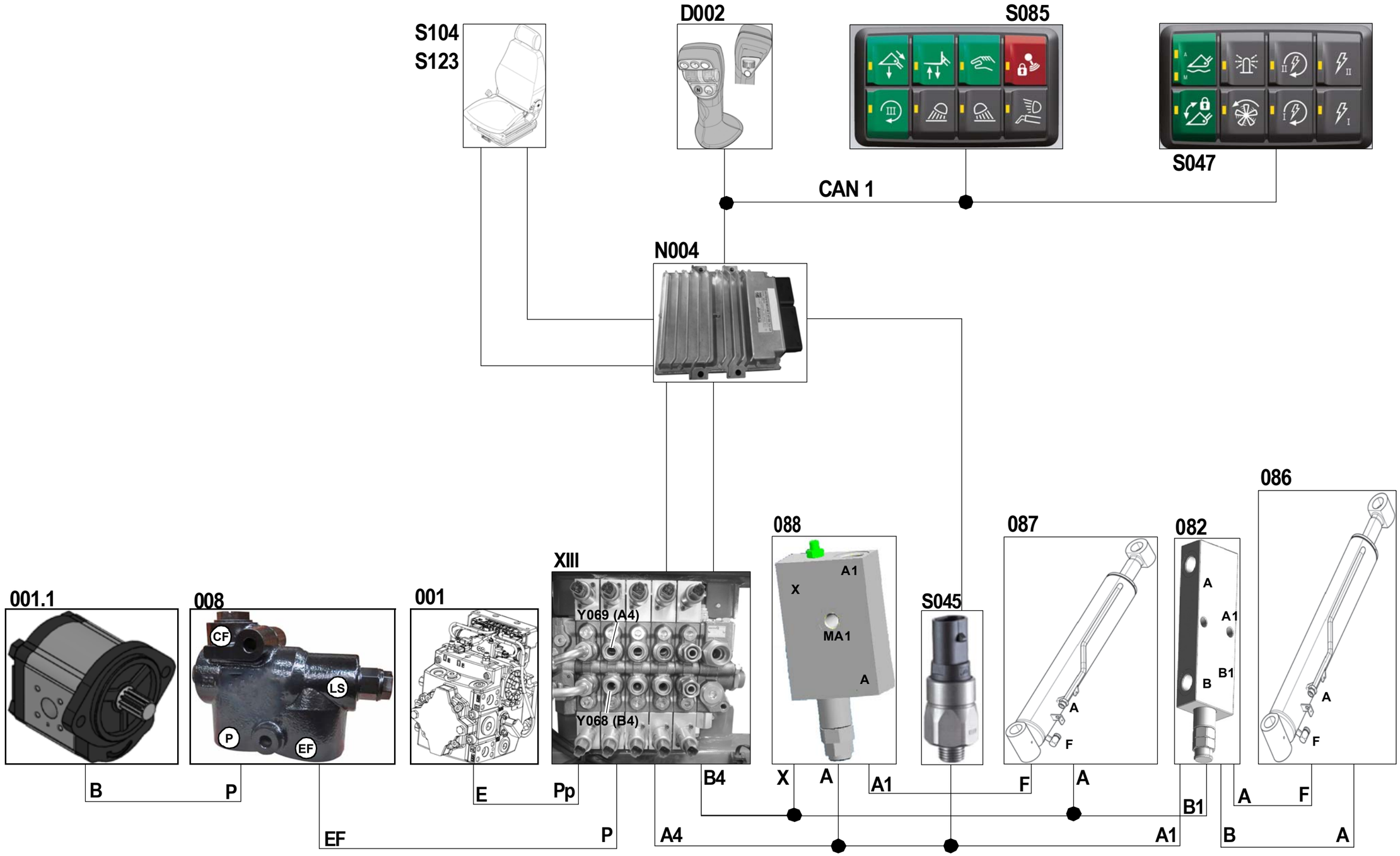

Description of tipping cylinder/tipping cylinder lock

Hydraulic components

Pos.	Component	Remarks
XIII	Main control unit (hydraulics)	HDS24
001	Boost pump	12 ccm/U (0.732 in³)
001.1	Constant pump work hydraulics	36 ccm/U (2.196 in³)
008	Priority valve	–
077	Pilot control pressure accumulator	210 bar (3045.79 psi)
082	Suction tilt ram/compensation cylinder	–
086	Compensation cylinder	–
087	Tilt cylinder	–
088	Tilt ram hose burst valve	–

Electrical components

D002	Joystick	CAN 1
N004	Controller	HY-TTC 580-CP
S045	Load stabiliser pressure switch	–
S047	Tipping cylinder lock touch button	CAN 1
S084	Hydraulic function shut down touch button	CAN 1
S085	Joystick cut-off	CAN 1
S104	Operator presence switch	–
S123	Seat belt contact switch	–
Y068	Proportional valve (dump in)	4,7 Ω
Y069	Proportional valve (dump out)	4,7 Ω

Pos.	Component	Designation
CAN1	CAN1 – Work hydraulics	–
CAN0	CAN0 – Drive	–

Hydraulic control unit XIII

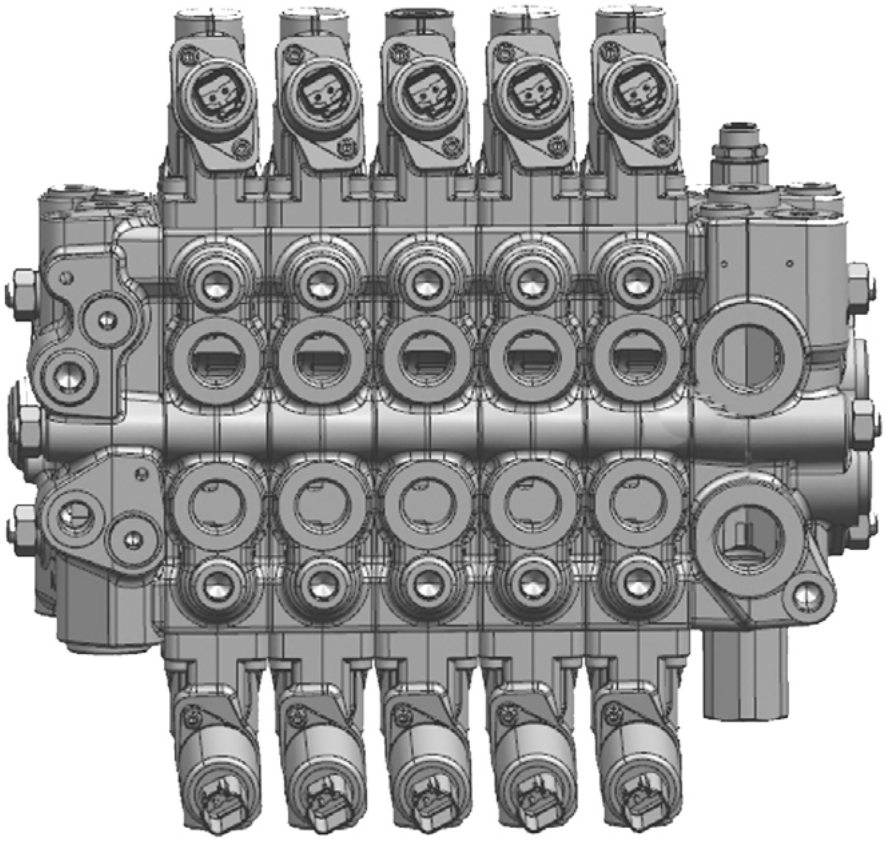

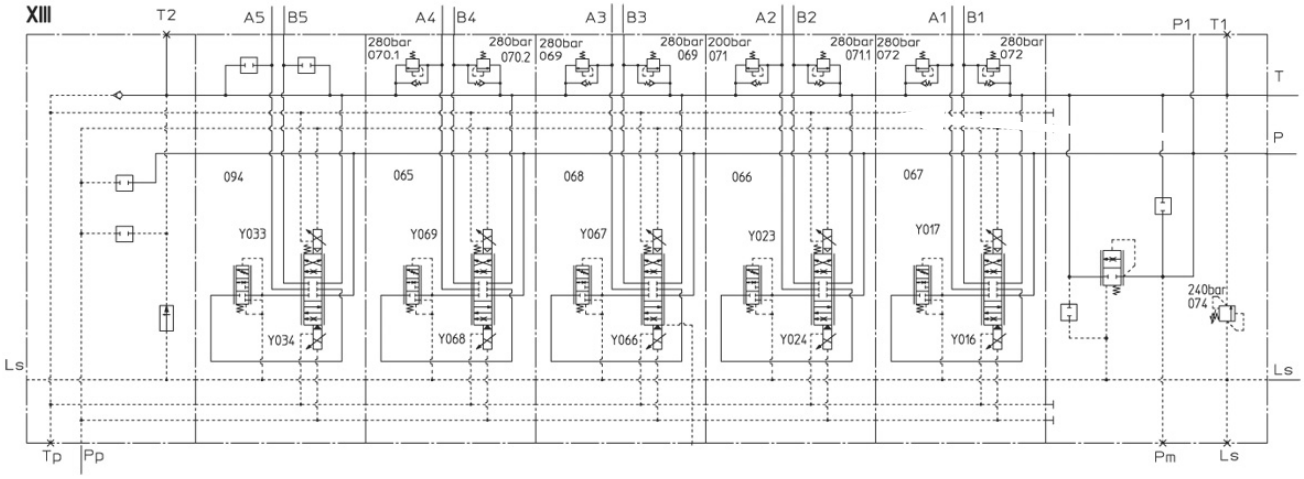

Hydraulic control unit XIII

Hydraulic control units **XIII**from 4 to 5 sections will be used. Section 5 does not have a secondary valve.

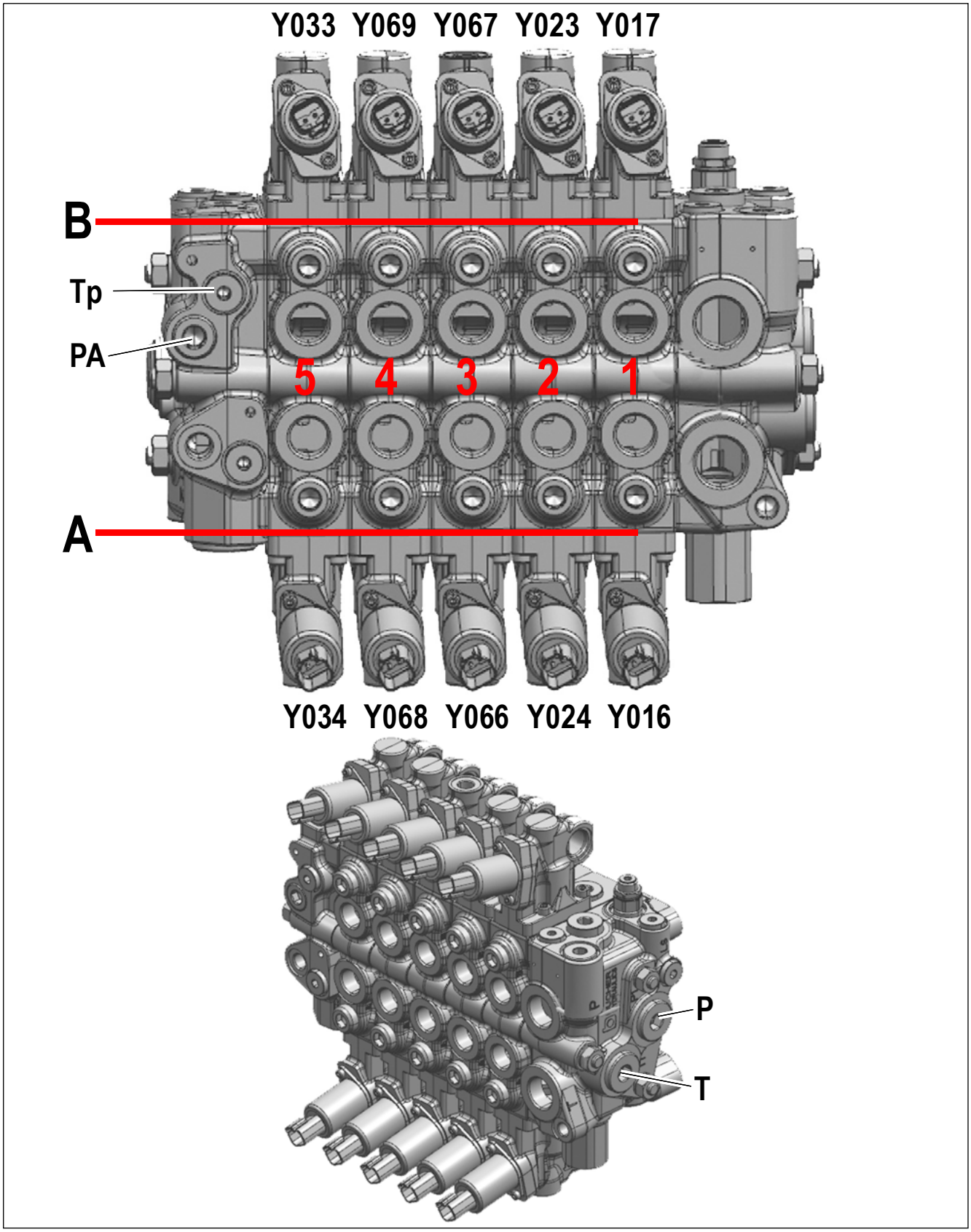

Description: control unit XIII

Pos.	Component	Remarks
A	Port designation on control valve XIII	Section 1–5 bottom side
B	Port designation on control valve XIII	Section 1–5 rod side
P	Work hydraulics pump I	36 ccm/U (2.196 in³)
PA	Pilot control (boost pressure)	Approx. 30 bar (435.10 psi)
T	Tank recirculation via the return filter	–
Tp	Tank venting for the pilot caps	–
Y016	Lock proportional valve (Section 1)	PWM 4.7 Ω
Y017	Unlock proportional valve (Section 1)	PWM 4.7 Ω
Y023	Retract proportional valve (Section 2)	PWM 4.7 Ω
Y024	Extend proportional valve (Section 2)	PWM 4.7 Ω
Y033	Proportional valve additional circuit (Section 5)	PWM 4.7 Ω
Y034	Proportional valve additional circuit (Section 5)	PWM 4.7 Ω
Y066	Raise proportional valve (Section 3)	PWM 4.7 Ω
Y067	Lower proportional valve (Section 3)	PWM 4.7 Ω
Y068	Tilt back proportional valve (Section 4)	PWM 4.7 Ω
Y069	Tip out proportional valve (Section 4)	PWM 4.7 Ω

Valves from hydraulic control unit XIII

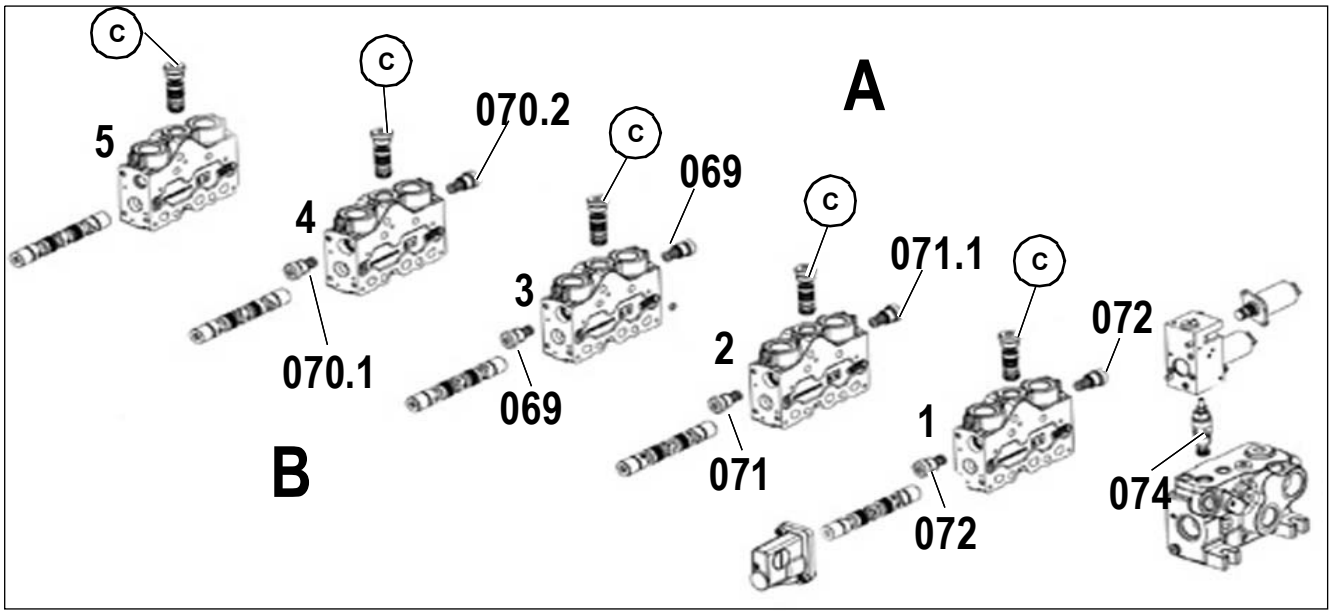

Description: control unit XIII

Pos.	Component	Remarks
1	3rd control circuit section 067	80 l/min (21.10 US gpm)
2	Push-out ram section 066	A2 – 100 l/min (26.4 US gpm) B2 – 80 l/min (21.10 US gpm)
3	Lift ram section 068	100 l/min (26.4 US gpm)
4	Tilt ram section 065	A4 – 100 l/min (26.4 US gpm) B4 – 80 l/min (21.10 US gpm)
5	Section rear additional control circuit Hitch/Tipper 094	80 l/min (21.10 US gpm)
A	Port designation on control valve XIII	Section 1–5 bottom side
B	Port designation on control valve XIII	Section 1–5 rod side
C	Pressure compensators	–
069	Secondary valve for raise lifting cylinder (B)	270–290 bar (3916–4206 psi)
069	Secondary valve for lower lifting cylinder (A)	270–290 bar (3916–4206 psi)
070.1	Secondary valve for tipping cylinder rod side fill shovel (A)	270–290 bar (3916–4206 psi)
070.2	Secondary valve for tipping cylinder bottom side empty shovel (B4)	270–290 bar (3916–4206 psi)
071	Secondary valve for push-out ram Extend bottom side (B)	190–210 bar (2755–3045 psi)
071.1	Secondary valve for push-out ram Retract rod side (A)	270–290 bar (3916–4206 psi)
072	Secondary valve 3rd control circuit, lock/unlock (A/B)	270–290 bar (3916–4206 psi)
074	LS pressure relief valve	240 bar (3480.91 psi)

Gear pump working hydraulics I

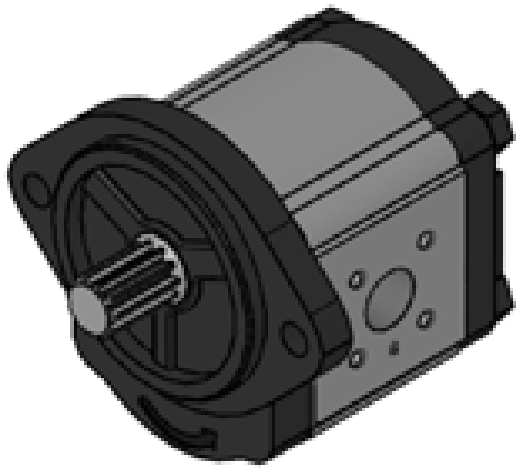

Component	Remarks	System pressure
I	36 ccm/U (2.196 in³)	230–250 bar (2320.6 – 2755.72 psi)

Function description

The gear pump for working hydraulics **I** supplies the steering orbitrol **IV** and the main control unit **XIII** with oil via the priority valve **008**. The oil flow is filtered by a high-pressure filter**167**directly after the gear pump **I**.

Priority valve 008

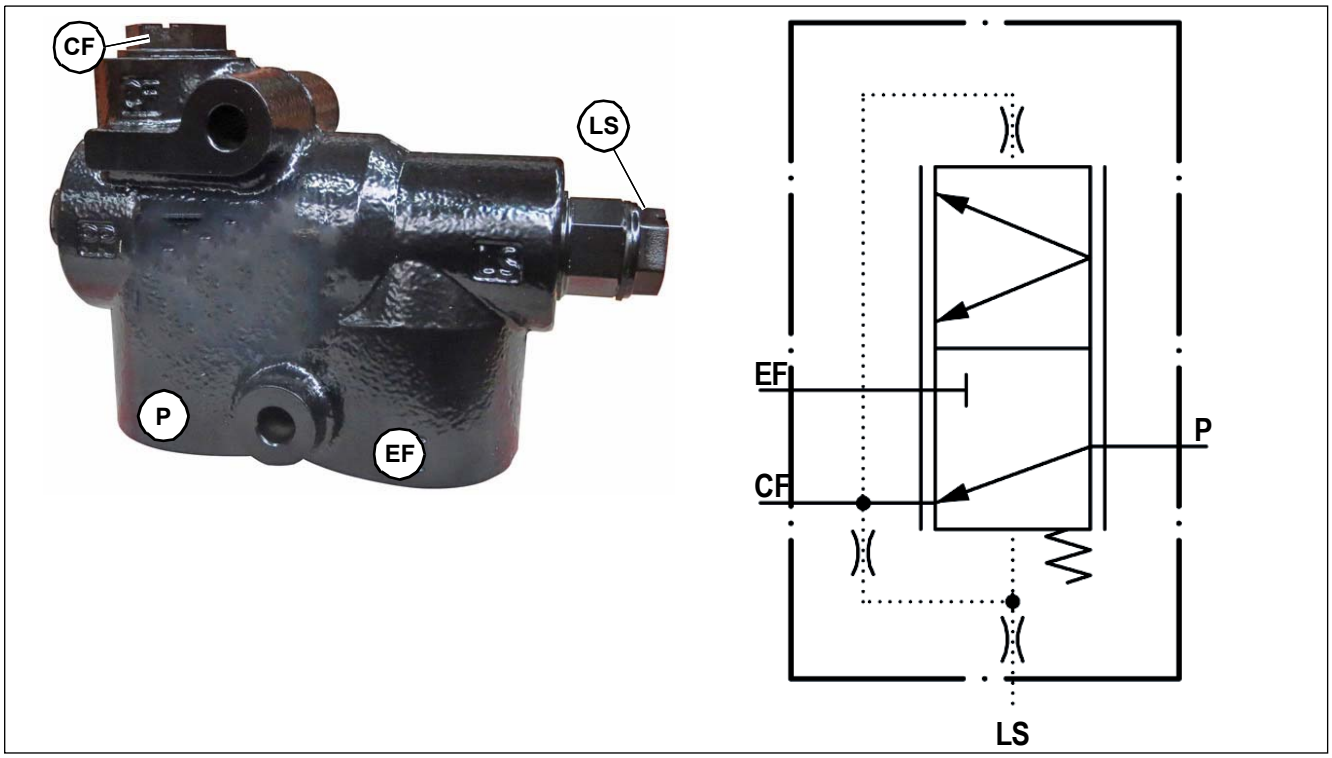

Connection	Power supply
P	Input from gear pump, working hydraulics **I**
LS	Input from steering orbitrol **IV**, port **LS**
CF	Output to steering orbitrol **IV**, port **P**
EF	Output to main control unit **XIII**, port **P1**

Function description

The priority valve **008** is responsible for dividing the oil flow from the gear pump work hydraulics **I into** the steering system and work hydraulics. Here, the oil is primarily supplied to the steering system**IV**.

Function

The oil flow coming from the gear pump **I** passes through port **P** and an internal duct of the priority valve **008** to the control spool. The control spool is then pushed against the spring via the area ratio and the oil flow is distributed evenly between the steering orbitrol **IV** and the main control unit **XIII**..

As soon as the steering orbitrol **IV** is actuated it generates an LS signal, which acts on the control spool of the priority valve **008**. Through the combination of the spring force and the LS signal the control spool is pushed back towards the initial position and the steering assumes priority. This can mean that functions of the working hydraulics are executed more slowly during steering.

Pressure accumulator 077

Important information

Membrane and hydraulic accumulators are pressure tanks in accordance with the European Pressure Equipment Directive 97/23/EC. Hydraulic accumulators are exclusively for the purpose of accumulating and discharging hydraulic fluids. Membrane or hydraulic accumulators consist of a fluid and a gas section with a membrane as gas-tight separating element.

DANGER

If the pressure accumulator is not filled correctly there is a risk of explosion! If pressure accumulators are filled with oxygen or air, they can explode!

This can result in serious injuries or even death.

► Only fill pressure accumulators with nitrogen.

Information

No welding or mechanical work may be carried out on the pressure accumulator!

We recommend checking the pretensioning pressure annually. This inspection may only be carried out by a skilled person with the respective qualification!

Component	Function	Remarks
077	Pilot control pressure accumulator	Gas filling overpressure 10 bar (145 psi)

Function description

Pressure accumulator **077** is the supply pressure for the pilot control. If the diesel engine fails this ensures that an emergency lowering manoeuvre can be carried out. It is also needed in order to release pressure from the individual control circuits.

Anticavitation valve tilt ram and compensation cylinder 082

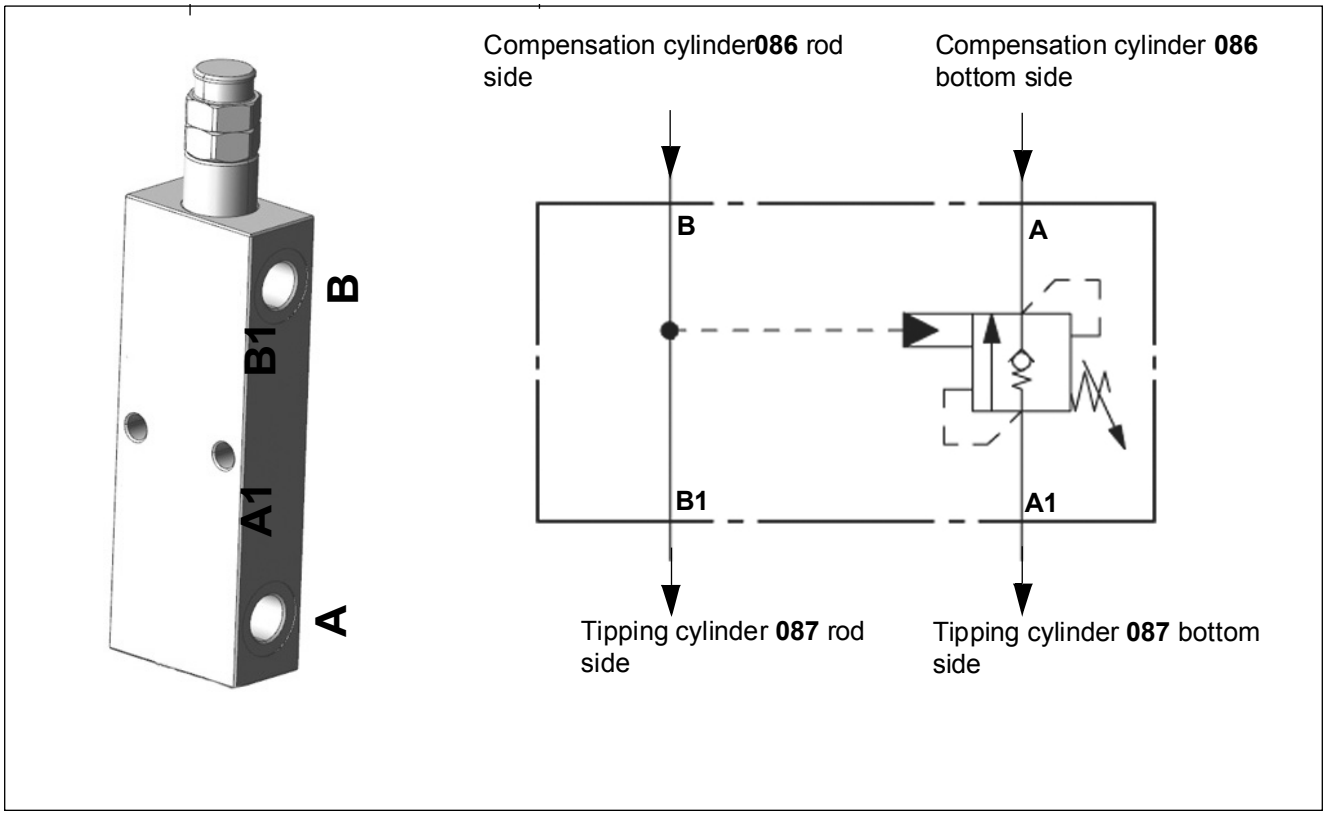

Connection	Power supply
A	Input compensation cylinder **086** (bottom side)
A1	Output from tilt ram **087** (bottom side)
B	Input to compensation cylinder **086** (rod side)
B1	Output from tilt ram **087** (rod side)

Functional characteristics: anti-cavitation valve for tipping and compensation cylinder 082

In order to keep the load at the same angle in relation to the vehicle when the boom is raising, tilt ram **087** is coupled to the compensation cylinder **086**. During this manoeuvre, the anticavitation valve **082** ensures that no unwanted side effects are incurred. It prevents the full pressure from the bottom side of tilt ram **087** from impacting the bottom side of the compensation cylinder **086** when the load stabiliser is switched on and the tilt-in function is also activated. This could cause the boom to be raised. Cavitation can occur in the bottom side of the lift cylinder **085.** If subsequently, the dump out function were operated, the boom would drop suddenly. Furthermore, it prevents the full pressure from the bottom side of tilt ram **087** from impacting the bottom side of the compensation cylinder during a tilt-in manoeuvre against a block. This could lead to distortion and an overload of the steel structure of the boom.

Function

When the boom is raised, pressure is exerted on the rod side of the compensation cylinder **086**. The pressure is exerted via connection **B** onto anti-cavitation valve **082**, thereby controlling it. The oil from the bottom side of tilt ram **087** can flow afterwards to the bottom side of the compensation cylinder **086** via the anticavitation valve **082**. If the telescopic arm is lowered, oil from the bottom side of the compensating cylinder **086** can flow via connection A via the non-return valve to connection **A1** and the bottom side of the tipping cylinder **087**.

If there is high pressure at the bottom side of the tipping cylinder **087** and no pressure on the rod side of the tipping cylinder **087** and compensation cylinder **086**, the anti-cavitation valve **082** acts like a pressure-reducing valve and reduces the pressure from connection **A1** to **A** by 190 bar (2755.7 psi).

Tilt ram hose burst valve 088

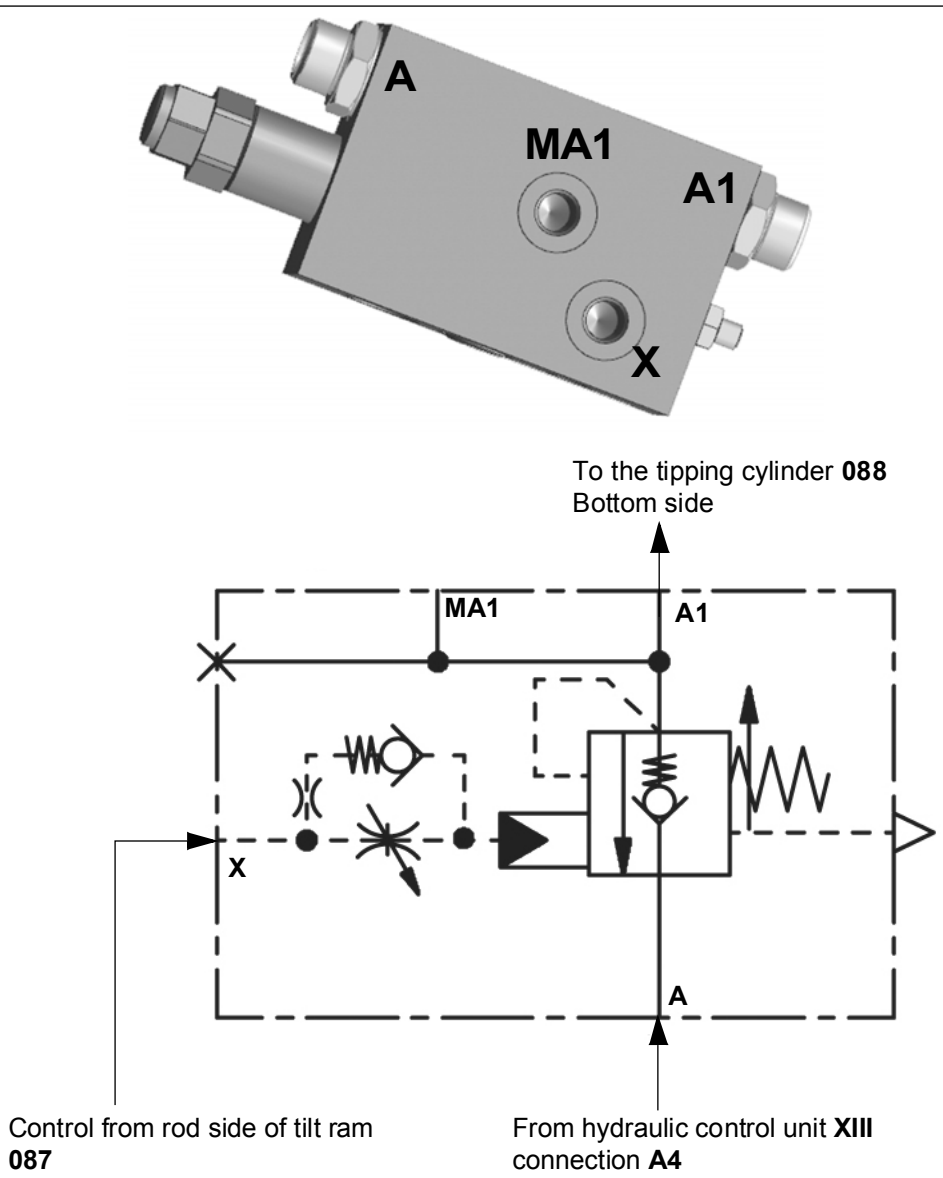

Connection	Power supply
A	Input from hydraulic control unit **XIII** (A4)
A1	Output to tilt ram **087** (bottom side)
X	Input to tilt ram **087** (rod side)
MA1	Bleed port

Functional characteristics: hose burst valve for tipping cylinder 088

Valve **088** covers the hose burst valve function at the lifting cylinder **087**. The hose burst valve prevents the load from being dumped out in the event of a break in the line on the bottom side of tilt ram 087.

Function

When tipping the telescopic arm, the volume flow from the control unit **XIII** (connection **A4**) coming from connection **A** to **A1**can flow into valve **088** via the non-return valve. To tilt out the boom a volume flow must be enabled from the bottom side of tilt ram **087** back to control unit **XIII**, this flow direction is initially blocked by the non-return valve in valve **088**. If tilting out is intended, the pressure on the rod side of the tilt ram **087** opens valve **088** via port **X** on the valve. The control pressure for the opening process is applied by a throttle and dissipated via a non-return valve in order to reduce vibrations.

A secondary valve is additionally integrated into valve **088**. In the event of external loads that are too heavy or a shock load that would cause too high a pressure being exerted on the bottom side of tilt ram **087**, the hose burst valve is also opened until the peak pressure has dissipated.

Joystick D002

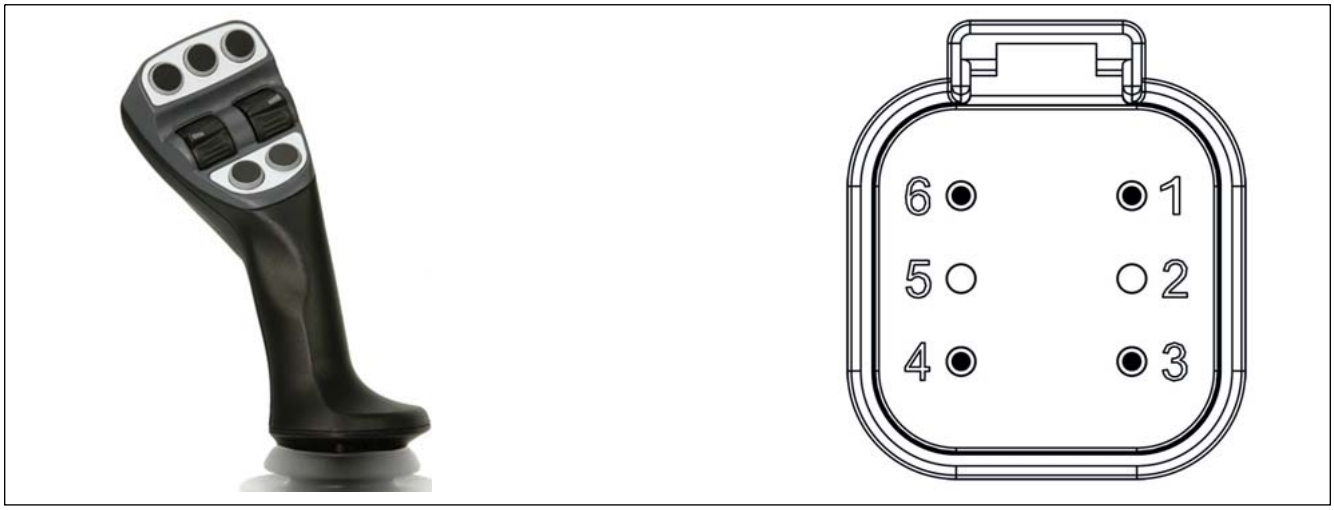

Pin assignment of Joystick D002

PIN	Component	Measuring range
1	Ground (KL31)	Ground/cab
2	Voltage supply F010/3 A (KL30)	12 V
3	Switched voltage supply F032/5 A (KL15)	12 V
4	–	–
5	CAN 1	low
6	CAN 1	high

Description of joystick D002 (version 1)

Functional characteristics of joystick (handle)

The joystick is used to operate the loader unit as well as various additional functions.

The loader unit can only be completely operated by the control lever if:

1. the seat contact switch is actuated (operator in the seat)
2. Starter ON
3. the diesel engine is on
4. Lock for long-haul travel **S085** off

Front side of joystick D002

Pos.	Component	Function
A	Tip switch **S066**	The drive is deactivated (neutral)
B	Roller **S034/035**	Forward/reverse travel
C	Tip switch **S135**	Reduce speed level e.g. from hare to turtle
D	Tip switch **S136**	Increase speed level e.g. from turtle to hare
E	Tip switch **S110**	Reversing valve (front telescopic arm)
F	Roller **S038/039**	Extend/retract telescopic arm
G	Tip switch **S092**	Bucket repositioning

Reverse of joystick D002

Pos.	Component	Function
H	Roller **S030/031**	Unlock/lock third control circuit
I	Tip switch **S025**	Differential lock (Y009)

Description of joystick D002 (version 2)

Functional characteristics of joystick (handle)

The joystick is used to operate the loader unit as well as various additional functions.

The loader unit can only be completely operated by the control lever if:

1. the seat contact switch is actuated (operator in the seat)
2. Starter ON
3. the diesel engine is on
4. Lock for long-haul travel **S085** off

Front side of joystick D002

Pos.	Component	Function
A	Tip switch **S109**	Operation of electric circuit 1 of the 7-pole Front power outlet
B	Roller **S034/035**	Forward/reverse drive and neutral
C	Tip switch **S135**	Reduce speed level e.g. from hare to turtle
D	Tip switch **S136**	Increase speed level e.g. from turtle to hare
E	Tip switch **S110**	Reversing valve (front telescopic arm)
F	Roller **S038/039**	Extend/retract telescopic arm
G	Tip switch **S092**	Bucket repositioning

Reverse of joystick D002

Pos.	Component	Function
H	Roller **S030/031**	Unlock/lock third control circuit
I	Tip switch **S025**	Differential lock (**Y009**)

Load stabiliser pressure switch S045

Switching off of load stabiliser when filling shovel

The load stabiliser is automatically switched on when a pressure of 150 bar is applied to pressure switch **S045**. The pressure switch **S045**is built into the working ling of tipping cylinder **087** (A4 bottom side).

The reason for switching off

For the parallel guidance of the attachment tools, the tipping cylinder **087** is directly connected with the compensating cylinder **086**. In other words, the oil that is displaced by the lifting movements (raising/lowering) on the compensating cylinder **086** ends up in the tipping cylinder **087**.

If the load stabiliser is switched on, the lift cylinder **085** (A3 bottom side) is connected with the pressure reservoir**080**. The (B3 rod side) of the lift cylinder **085** with the tank**XX**. If the tipping cylinder **087** is tipped against the detent, the compensating cylinder **086** is simultaneously loaded with pressure on the bottom side. The compensating cylinder **086** can now lift the loader unit because the lift cylinder **085** on the (B3 rod side) is connected to the tank **XX**. In order to prevent this, for a pressure of 150 bar (2175.6 psi) at the tipping cylinder **087** (A4 bottom side) via the pressure switch **S045**, the load stabiliser is switched off. The lift cylinder **085** is thus locked again, and lifting by tipping is no longer possible.

Touch button S047 – load stabiliser in the keypad D004

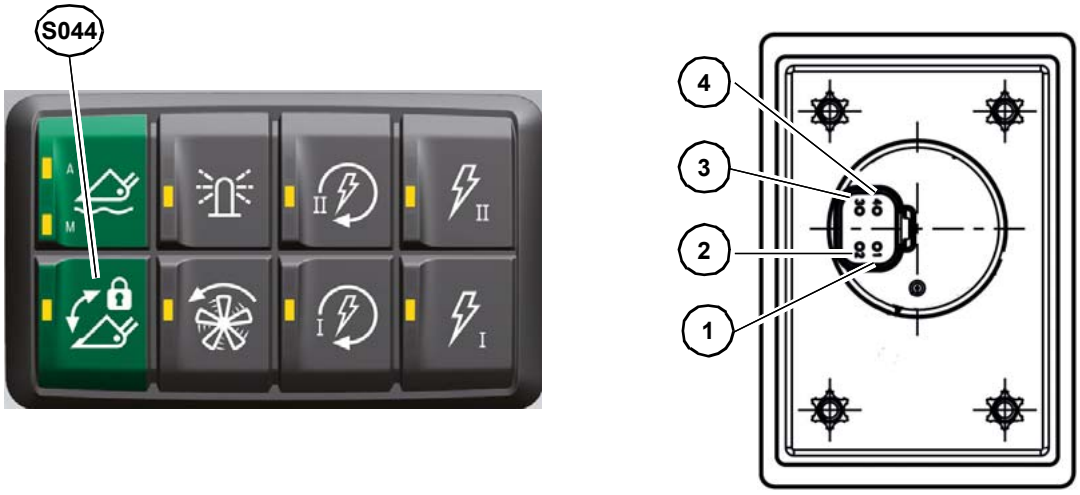

PIN	Component	Measuring range
1	Voltage supply F032/5 A	12 V
2	Ground	Cabin
3	CAN 1	high
4	CAN 1	low

Function description

With the touch button **S047** in the keypad **D004,** the filling and emptying functions are locked. If the function is active, the touch button**S047** lights up.

Tipping cylinder lock switched on

With the touch button **S047** on the keypad **D004** a CAN message (CAN1) is sent to the controller **N004**. From the controller **N004**, the proportional valves **Y068** and **Y069** with a PWM signal.

The PIN 1-95 outlet on the controller **N004** is locked, and the proportional valve **Y068** (2) is not energized.

The PIN 1-71 outlet on the controller **N004** is locked, and the proportional valve **Y069** (2) is not energized.

Touch button S084 - hydraulic shut-down

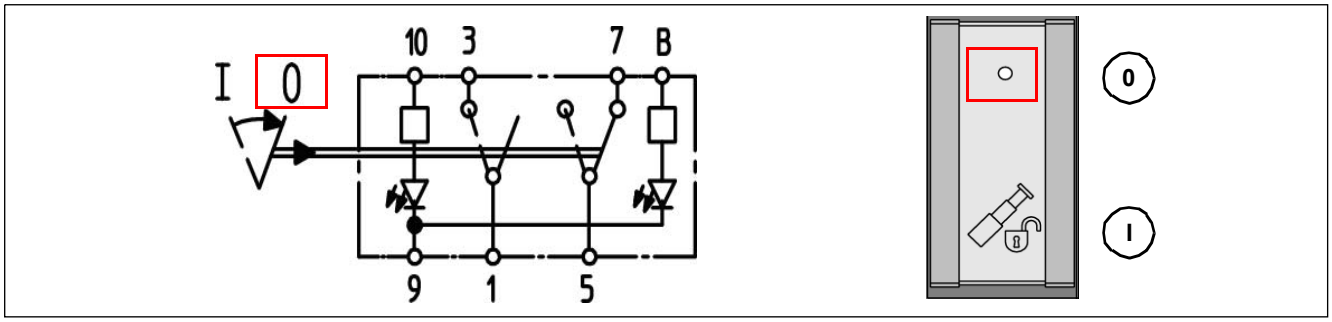

PIN	Component	to PIN	Measuring range	
			not actuated (0)	actuated (I)
1	Output to controller N004	XE15 (1-16) S084 (B)	–	5 V
3	Input from controller N004	XE04 (2-21)	5 V	5 V
5	Output to controller N004	XE15 (1-40)	5 V	–
7	Input from controller N004	XE04 (2-21)	5 V	5 V
9	Lights	–	Earth (cab)	Earth (cab)
10	Lighting F018/10 A	–	12 V	12 V
B	Lighting for control	–	0 V	5 V

- ➥ If button **S084** is pressed in bucket mode, retraction of the boom is stopped.
- ➥ If button **S084** is pressed in fork-lift mode, retraction is stopped during lowering of the boom.
- ➥ If the touch button **S084** is actuated in manual mode, the lowering movement is continued with reduced speed.

Function description

When pressed, the touch button **S084** switches off the overload limit up to 60 s. The functions will then be controlled normally again.

In the case of an error, the bucket mode becomes active. Combined movements are stopped.

Touch button S085 – lock for long-haul travel in the keypad D003

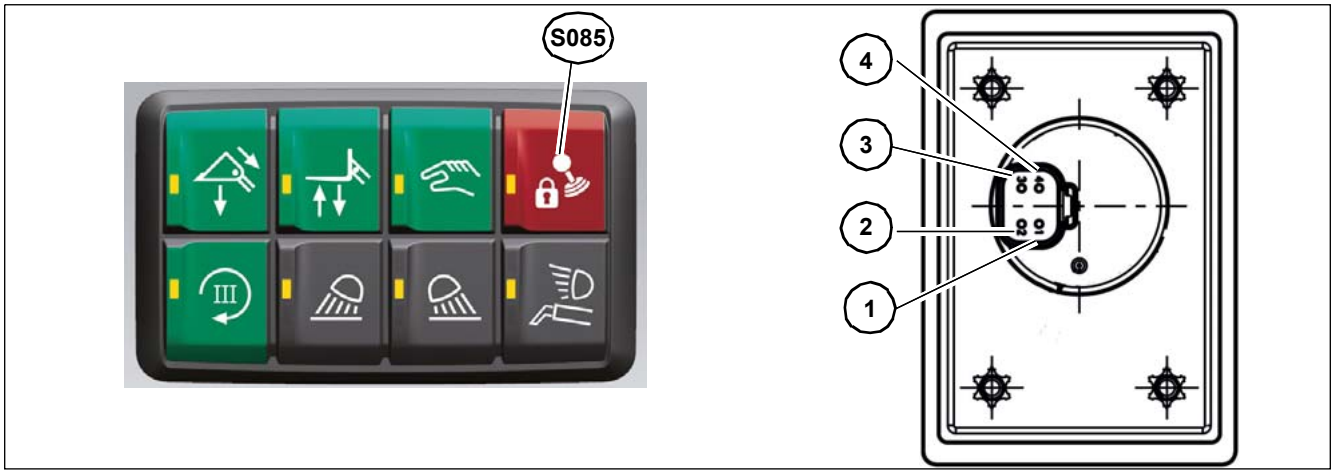

PIN	Component	Measuring range
1	Voltage supply F032/5 A	12 V
2	Ground	Cabin
3	CAN 1	high
4	CAN 1	low

Function description

When the road travel lock function switch **S085** is switched to road travel lock ON, no hydraulic functions can be actuated. If the function is active, the touch button **S085** lights up.

Joystick shut-down switched on

With the touch button **S085** on the keypad **D003** a CAN message (CAN1) is sent to controller **N004**. The controller **N004** deactivates all outputs to the proportional valves on the control unit. In addition, all circuits of the 14-pole plug receptacle are deactivated.

Operator presence switch S104

The seat contact switch **S104** is composed of two switches that have been put into a single casing.

Driver not seated on the seat

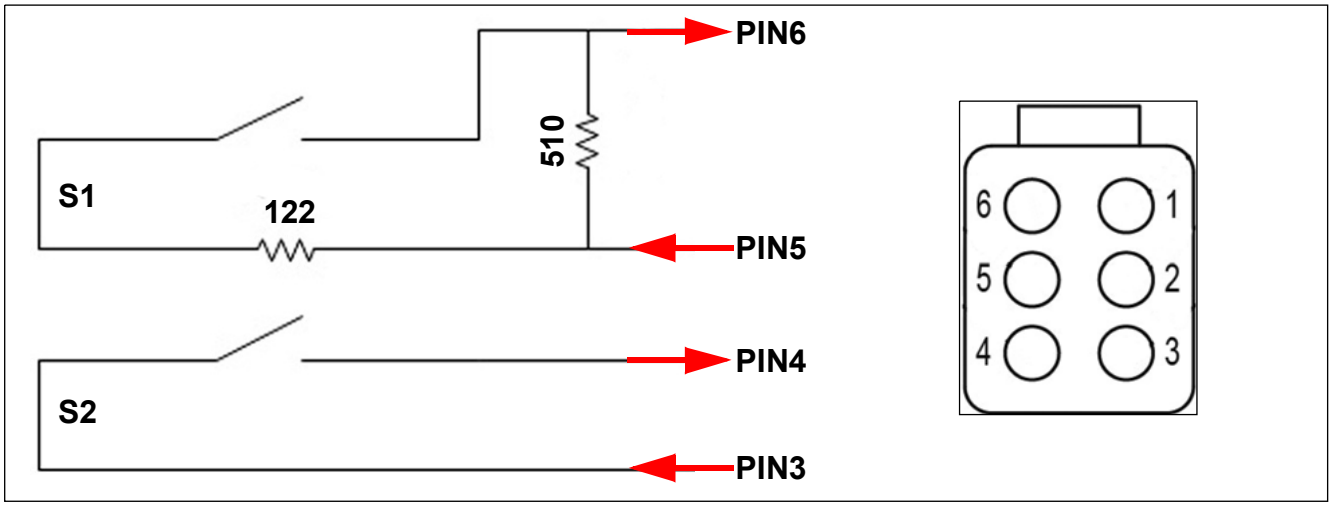

PIN	Component	To PIN	Measuring range
1	Board voltage F038/25A (for air cushioned seat option)	–	12 V
2	Ground	Cabin	Ground
3	On-board voltage F014/5A	–	12 V
4	Signal to controller N004	XE15 (1-39)	0 V
5	Output from controller N004	XE15 (1-04)	12 V
6	Signal to the controller N004	XE04 (2-44)	2 – 3 V

Operator not on seat when the function starts

Seat contact switch open

- Diesel engine cannot be started.
- The travel direction cannot be selected.

The following proportional valves are not energized.

1. Raising **Y066,** lowering **Y067** of telescopic arm
2. Fill shovel **Y068,** Empty shovel **Y069**
3. Retraction **Y023,** extension **Y024** of telescopic arm
4. Locking **Y016,** unlocking **Y017**
5. Solenoid valve for quickhitch lock **Y025**

Upper/lower rear additional control circuit

1. Raising **Y044** or lowering **Y045** tipper or raising **Y044** or lowering **Y045** auto hitch
2. Auto hitch tipper switch-over **Y046**
3. Unlock auto hitch **Y047**

Operator not in seat during active function

The following valves remain energized, even when the operator leaves the seat during the activated function.

Upper/lower rear additional control circuit

1. Raising **Y044** or lowering **Y045** tipper or raising **Y044** or lowering **Y045** auto hitch
2. Auto hitch tipper switch-over **Y046**
3. Locking permanent function of third control circuit **Y016**
4. Solenoid valve for changeover of front 4th control circuit **Y051**
5. PTO solenoid valve **Y120**
6. Rear hitch solenoid valves **Y117**, **Y118**, **Y129**

If the operator leaves the seat for longer than 3 s, the following functions will be stopped.

1. Retraction **Y023,** extension **Y024** of telescopic arm
2. Raising **Y066,** lowering **Y067** of telescopic arm
3. Fill shovel **Y068,** Empty shovel **Y069**
4. Locking **Y016,** unlocking **Y017**
5. If the lowering function **Y067** is still active after 3 s, the lowering speed is throttled in relation to the driving speed until the standstill of the lowering movement.
6. Below a speed of 7 km/h (4.3 mph), the drive is switched into neutral if the operator leaves the seat for more than 5 s.
7. If the driving speed is below 0.5 km/h (0.3 mph), after 1 s, it will be switched to neutral and a warning tone will sound.
8. A warning signal sounds at speeds over 7 km/h (4.3 mph)

Driver seated on the seat

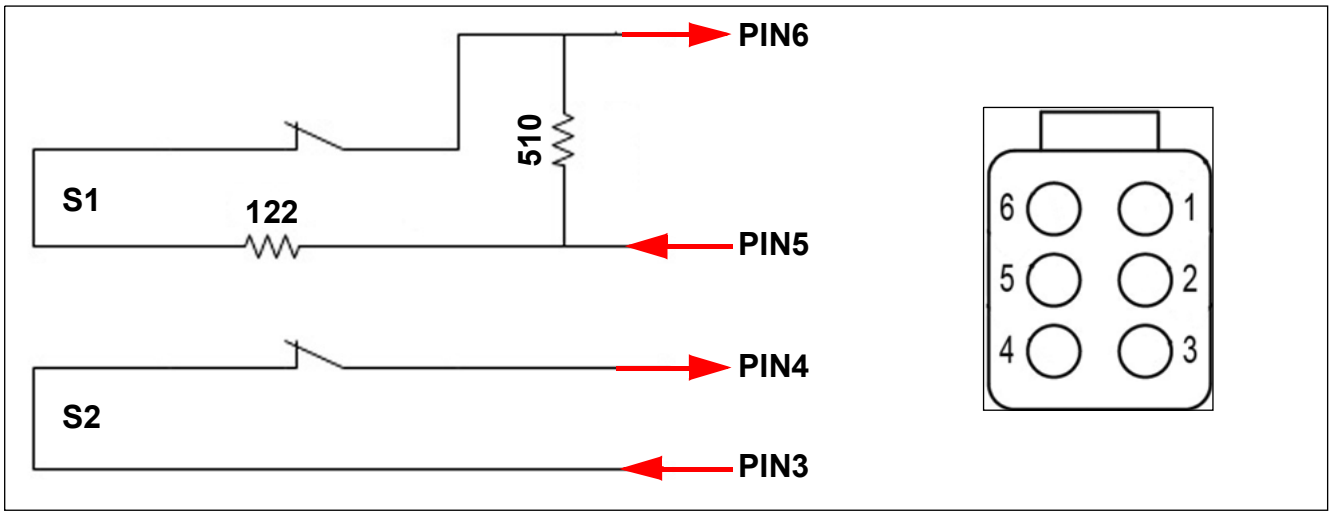

PIN	Component	To PIN	Measuring range
1	Board voltage F038/25A (for air cushioned seat option)	–	12 V
2	Ground	Cabin	Ground
3	On-board voltage F014/5A	–	12 V
4	Signal to controller N004	XE15 (1-39)	12 V
5	Output from controller N004	XE15 (1-04)	12 V
6	Signal to the controller N004	XE04 (2-44)	5 – 7 V

If a voltage of 5–7 V is applied to plug XE15 (1-04) and a voltage of 12 V to plug XE15 (1-39), the operator is in the operator's seat.

Seat contact switch closed

The vehicle can be used to its full extent

Machine runs without the driver on the seat

➥ The valves for the additional control circuits continue to be energised but have to be switched on before (operator on the seat)

If the operator leaves the seat for longer than 3 s, the following functions will be stopped.

1. Retraction **Y023,** extension **Y024** of telescopic arm
2. Raising **Y066,** lowering **Y067** of telescopic arm
3. Fill shovel **Y068,** Empty shovel **Y069**
4. Locking **Y016,** unlocking **Y017**
5. If the lowering function **Y067** is still active after 3 s, the lowering speed is throttled in relation to the driving speed until the standstill of the lowering movement.
6. Below a speed of 7 km/h (4.3 mph), the drive is switched into neutral if the operator leaves the seat for more than 5 s.
7. If the driving speed is below 0.5 km/h (0.3 mph), after 1 s, it will be switched to neutral and a warning tone will sound.
8. A warning signal sounds at speeds over 7 km/h (4.3 mph)

Belt contact switch S123 (option)

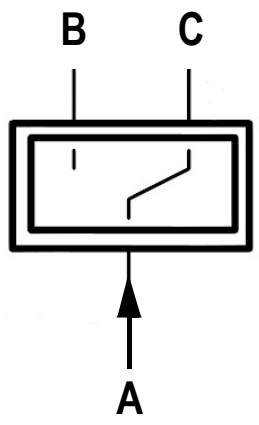

PIN	Component	KCN (PIN)	Measuring range	
			buckled in	Not buckled in
A	On-board voltage F014/5A	–	12 V	12 V
B	Input to controller N004	XE15 (1-15)	10 V	0 V
C	Output to switching relay K110	K110 (86)	0 V	12 V

Seat belt not fastened

- Diesel engine cannot be started.
- The travel direction cannot be selected.

The following proportional valves are not energized.

1. Raising **Y066,** lowering **Y067**of telescopic arm
2. Fill shovel **Y068,** Empty shovel **Y069**
3. Retraction **Y023,** extension **Y024**of telescopic arm
4. Locking**Y016,** unlocking **Y017**
5. Solenoid valve for quickhitch lock **Y025**

Upper/lower rear additional control circuit

1. Raising **Y044** or lowering **Y045** tipper or raising **Y044** or lowering **Y045** auto hitch
2. Auto hitch tipper switch-over **Y046**

- Unlock auto hitch **Y047**

8.7 Bucket repositioning control

Overview: bucket repositioning

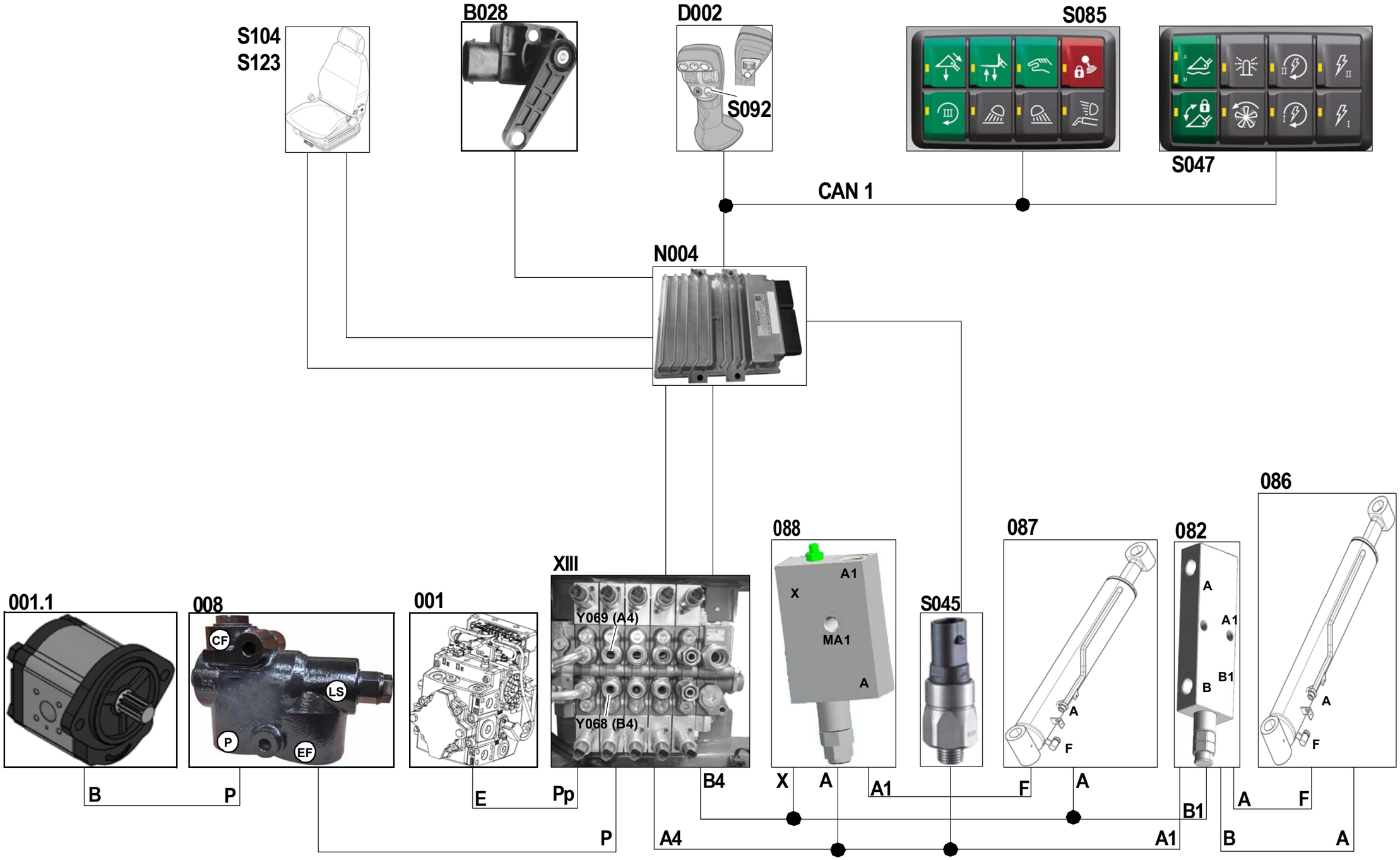

Description of bucket retraction

Hydraulic components

Pos.	Component	Remarks
XIII	Main control unit (hydraulics)	HDS24
001	Boost pump	12 ccm/U (0.732 in³)
001.1	Constant pump work hydraulics	36 ccm/U (2.196 in³)
008	Priority valve	–
082	Suction tilt ram/compensation cylinder	–
086	Compensation cylinder	–
087	Tilt cylinder	–
088	Tilt ram hose burst valve	–

Electrical components

B028	Position pickup, bucket repositioning	5 V
D002	Joystick	CAN 1
N004	Controller	HY-TTC 580-CP
S045	Load stabiliser pressure switch	–
S047	Tipping cylinder lock touch button	CAN 1
S084	Hydraulic function shut down touch button	CAN 1
S085	Joystick cut-off	CAN 1
S104	Operator presence switch	–
S123	Seat belt contact switch	–
Y068	Proportional valve (dump in)	4,7 Ω
Y069	Proportional valve (dump out)	4,7 Ω

Pos.	Component	Designation
CAN1	CAN1 – Work hydraulics	–
CAN0	CAN0 – Drive	–

Hydraulic control unit XIII

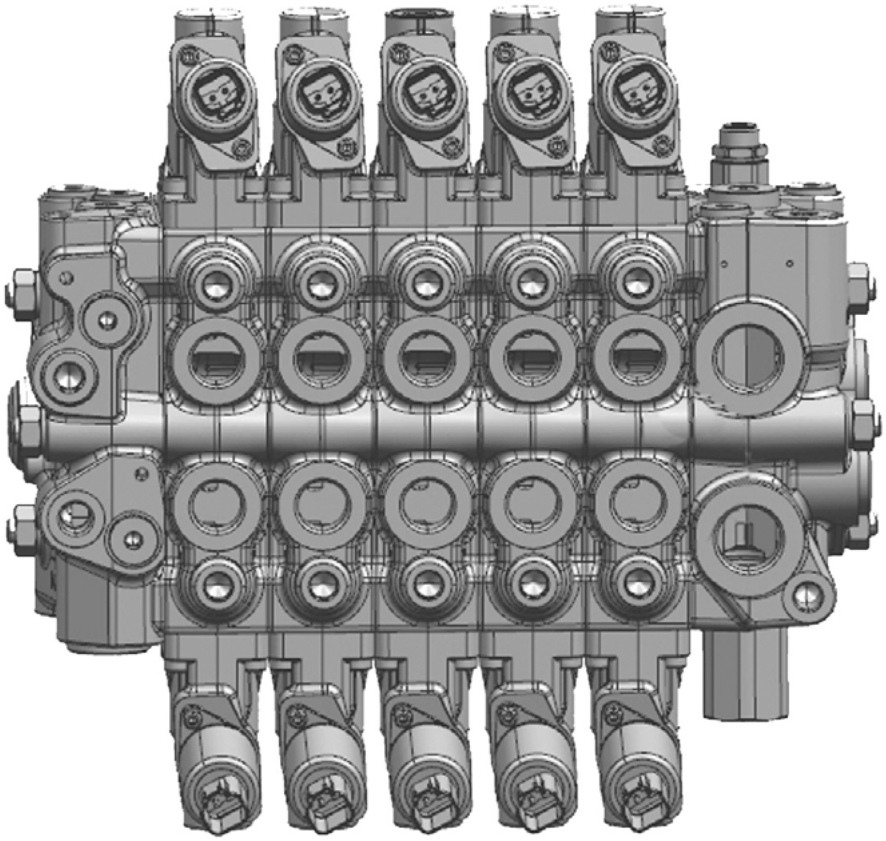

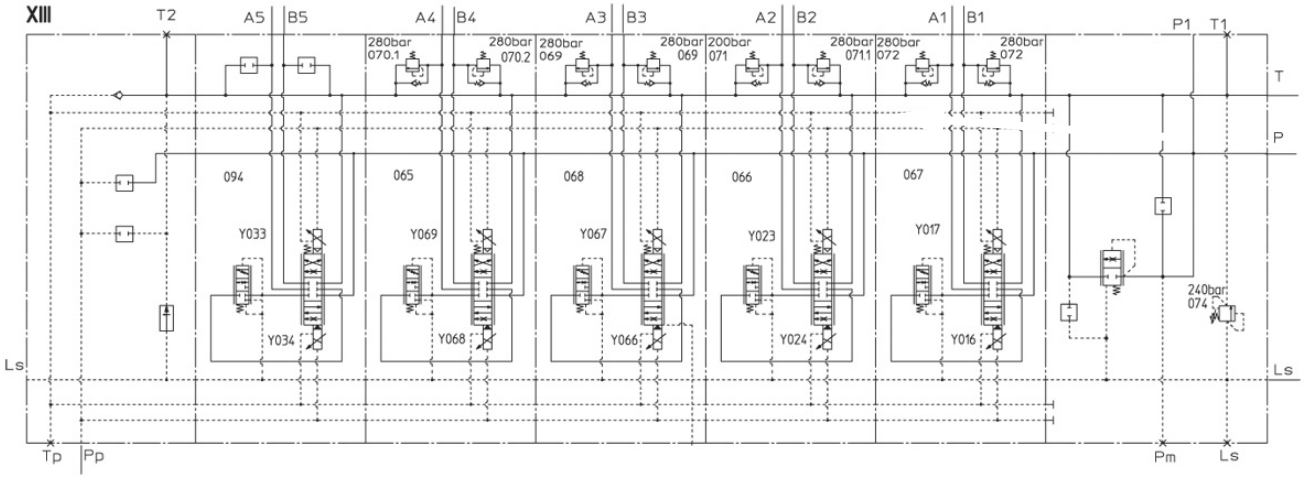

Hydraulic control unit XIII

Hydraulic control units **XIII** from four to five sections will be used. Section 5 does not have a secondary valve.

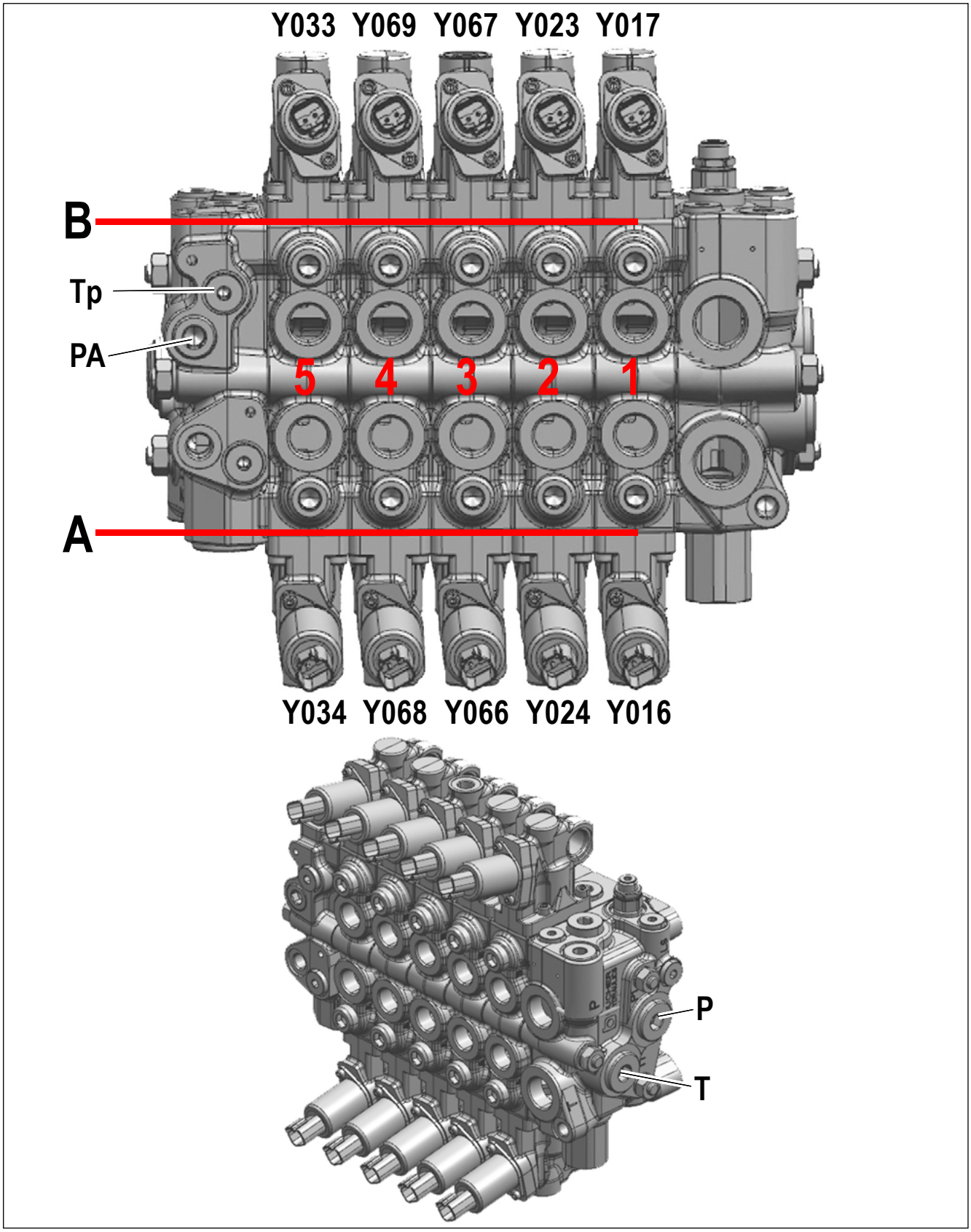

Description: control unit XIII

Pos.	Component	Remarks
A	Port designation on control valve XIII	Section 1–5 bottom side
B	Port designation on control valve XIII	Section 1–5 rod side
P	Work hydraulics pump I	36 ccm/U (2.196 in³)
PA	Pilot control (boost pressure)	Approx. 30 bar (435.10 psi)
T	Tank recirculation via the return filter	–
Tp	Tank venting for the pilot caps	–
Y016	Lock proportional valve (Section 1)	PWM 4.7 Ω
Y017	Unlock proportional valve (Section 1)	PWM 4.7 Ω
Y023	Retract proportional valve (Section 2)	PWM 4.7 Ω
Y024	Extend proportional valve (Section 2)	PWM 4.7 Ω
Y033	Proportional valve additional circuit (Section 5)	PWM 4.7 Ω
Y034	Proportional valve additional circuit (Section 5)	PWM 4.7 Ω
Y066	Raise proportional valve (Section 3)	PWM 4.7 Ω
Y067	Lower proportional valve (Section 3)	PWM 4.7 Ω
Y068	Tilt back proportional valve (Section 4)	PWM 4.7 Ω
Y069	Tip out proportional valve (Section 4)	PWM 4.7 Ω

Valves from hydraulic control unit XIII

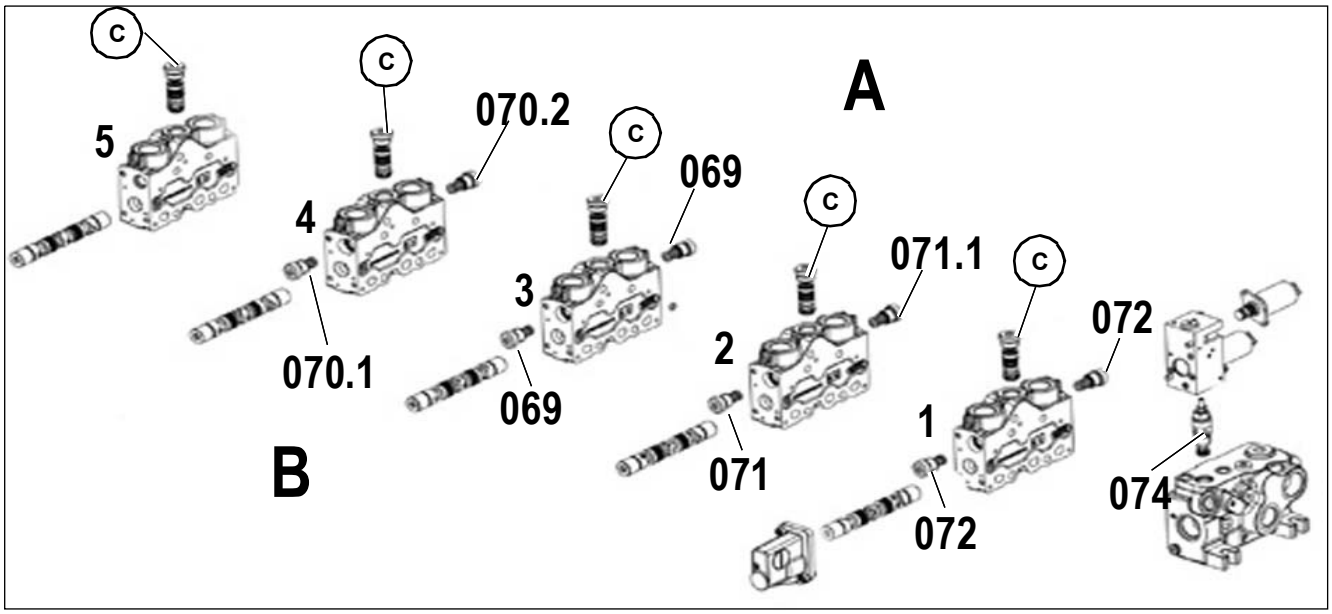

Description: control unit XIII

Pos.	Component	Remarks
1	3rd control circuit section 067	80 l/min (21.10 US gpm)
2	Push-out ram section 066	A2 – 100 l/min (26.4 US gpm) B2 – 80 l/min (21.10 US gpm)
3	Lift ram section 068	100 l/min (26.4 US gpm)
4	Tilt ram section 065	A4 – 100 l/min (26.4 US gpm) B4 – 80 l/min (21.10 US gpm)
5	Section rear additional control circuit Hitch/Tipper 094	80 l/min (21.10 US gpm)
A	Port designation on control valve XIII	Section 1–5 bottom side
B	Port designation on control valve XIII	Section 1–5 rod side
C	Pressure compensators	–
069	Secondary valve for raise lifting cylinder (B)	270–290 bar (3916–4206 psi)
069	Secondary valve for lower lifting cylinder (A)	270–290 bar (3916–4206 psi)
070.1	Secondary valve for tipping cylinder rod side fill shovel (A)	270–290 bar (3916–4206 psi)
070.2	Secondary valve for tipping cylinder bottom side empty shovel (B4)	270–290 bar (3916–4206 psi)
071	Secondary valve for push-out ram Extend bottom side (B)	190–210 bar (2755–3045 psi)
071.1	Secondary valve for push-out ram Retract rod side (A)	270–290 bar (3916–4206 psi)
072	Secondary valve 3rd control circuit, lock/unlock (A/B)	270–290 bar (3916–4206 psi)
074	LS pressure relief valve	240 bar (3480.91 psi)

Gear pump working hydraulics I

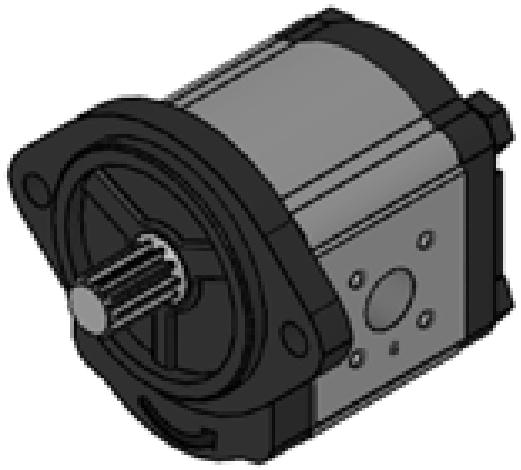

Component	Remarks	System pressure
I	36 ccm/U (2.196 in³)	230–250 bar (2320.6 – 2755.72 psi)

Function description

The gear pump for working hydraulics **I** supplies the steering orbitrol **IV** and the main control unit **XIII** with oil via the priority valve **008**. The oil flow is filtered by a high-pressure filter **167** directly after the gear pump **I**.

Priority valve 008

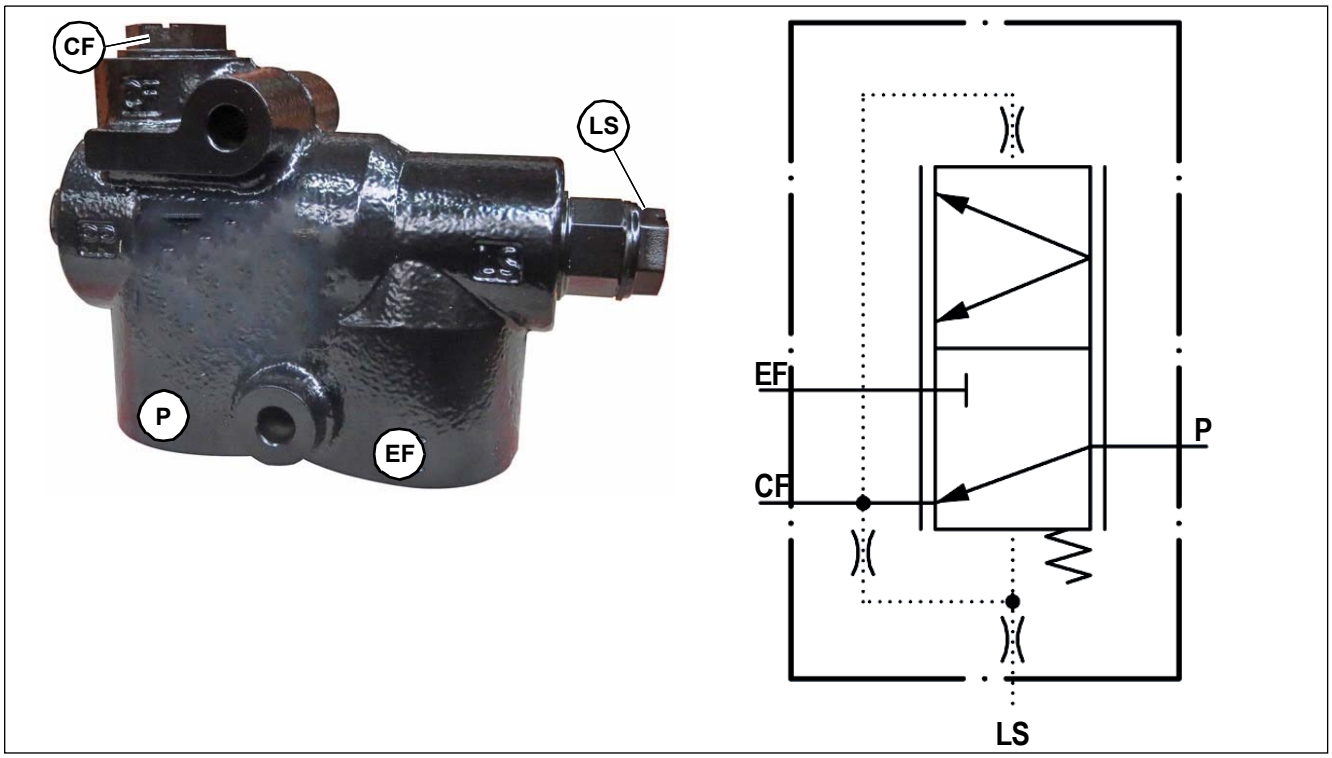

Connection	Power supply
P	Input from gear pump, working hydraulics **I**
LS	Input from steering orbitrol **IV**, port **LS**
CF	Output to steering orbitrol **IV**, port **P**
EF	Output to main control unit **XIII**, port **P1**

Function description

The priority valve **008** is responsible for dividing the oil flow from the gear pump work hydraulics **I into** the steering system and work hydraulics. Here, the oil is primarily supplied to the steering system**IV**.

Function

The oil flow coming from the gear pump **I** passes through port **P** and an internal duct of the priority valve **008** to the control spool. The control spool is then pushed against the spring via the area ratio and the oil flow is distributed evenly between the steering orbitrol **IV** and the main control unit **XIII**..

As soon as the steering orbitrol **IV** is actuated it generates an LS signal, which acts on the control spool of the priority valve **008**. Through the combination of the spring force and the LS signal the control spool is pushed back towards the initial position and the steering assumes priority. This can mean that functions of the working hydraulics are executed more slowly during steering.

Pressure accumulator 080

Important information

Membrane and hydraulic accumulators are pressure tanks in accordance with the European Pressure Equipment Directive 97/23/EC. Hydraulic accumulators are exclusively for the purpose of accumulating and discharging hydraulic fluids. Membrane or hydraulic accumulators consist of a fluid and a gas section with a membrane as gas-tight separating element.

DANGER

If the pressure accumulator is not filled correctly there is a risk of explosion! If pressure accumulators are filled with oxygen or air, they can explode!

This can result in serious injuries or even death.

► Only fill pressure accumulators with nitrogen.

Information

No welding or mechanical work may be carried out on the pressure accumulator!

We recommend checking the pretensioning pressure annually. This inspection may only be carried out by a skilled person with the respective qualification!

Component	Function	Remarks
080	Load stabiliser pressure accumulator	Gas filling pressure 35 bar (507,63 psi)

Function description

The pressure accumulator **080** is connected to the load stabiliser **XIV** via port **ACC**. The pressure accumulator **080** is activated via the load stabiliser solenoid valve **Y021**.

If the load stabiliser solenoid valve **Y021** is energized by controller N004, the bottom side of the lift cylinder **085** is connected with the pressure reservoir **080**.

Anticavitation valve tilt ram and compensation cylinder 082

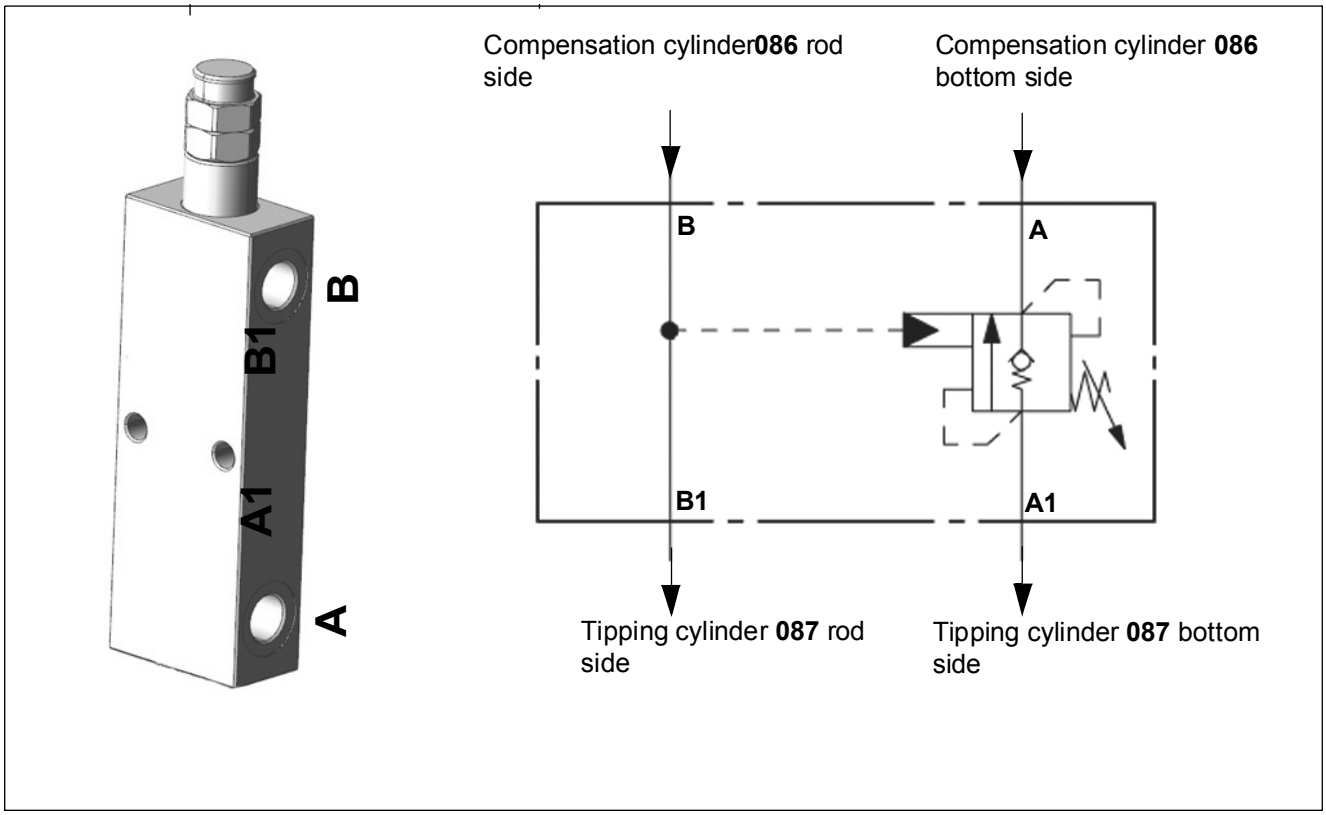

Connection	Power supply
A	Input compensation cylinder **086** (bottom side)
A1	Output from tilt ram **087** (bottom side)
B	Input to compensation cylinder **086** (rod side)
B1	Output from tilt ram **087** (rod side)

Functional characteristics: anti-cavitation valve for tipping and compensation cylinder 082

In order to keep the load at the same angle in relation to the vehicle when the boom is raising, tilt ram **087** is coupled to the compensation cylinder **086**. During this manoeuvre, the anticavitation valve **082** ensures that no unwanted side effects are incurred. It prevents the full pressure from the bottom side of tilt ram **087** from impacting the bottom side of the compensation cylinder **086** when the load stabiliser is switched on and the tilt-in function is also activated. This could cause the boom to be raised. Cavitation can occur in the bottom side of the lift cylinder **085 .** If subsequently, the dump out function were operated, the boom would drop suddenly. Furthermore, it prevents the full pressure from the bottom side of tilt ram **087** from impacting the bottom side of the compensation cylinder during a tilt-in manoeuvre against a block. This could lead to distortion and an overload of the steel structure of the boom.

Function

When the boom is raised, pressure is exerted on the rod side of the compensation cylinder **086**. The pressure is exerted via connection **B** onto the anti-cavitation valve **082**, thereby controlling it. The oil from the bottom side of the tipping cylinder **087** can flow via the anti-cavitation valve **082** to the bottom side of the compensating cylinder **086**. If the telescopic arm is lowered, oil from the bottom side of the compensating cylinder **086** can flow via connection A via the non-return valve to connection **A1** and the bottom side of the tipping cylinder **087**.

If there is high pressure at the bottom side of the tipping cylinder **087** and no pressure on the rod side of the tipping cylinder **087** and compensation cylinder **086**, the anti-cavitation valve **082** acts like a pressure-reducing valve and reduces the pressure from connection **A1** to **A** by 190 bar (2755.7 psi).

Tilt ram hose burst valve 088

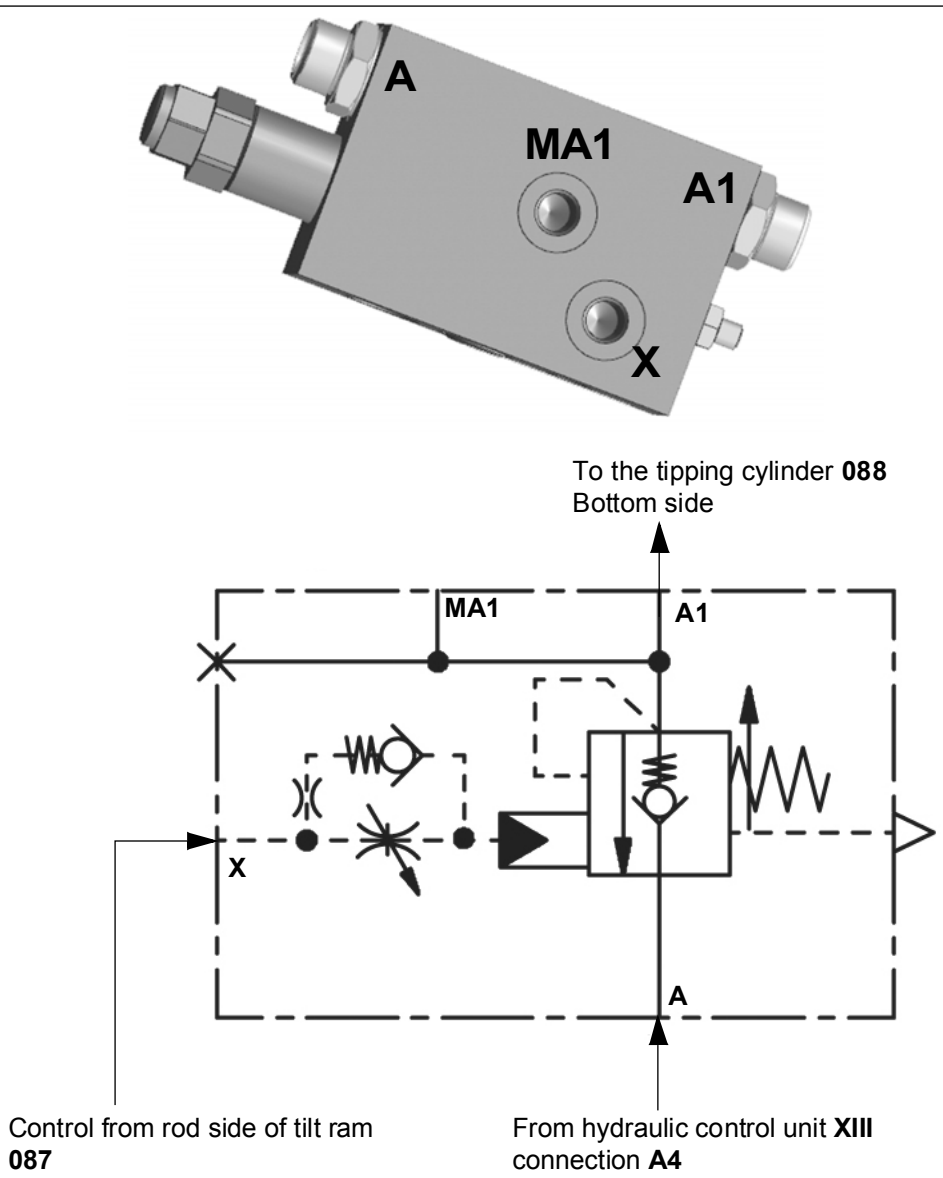

Connection	Power supply
A	Input from hydraulic control unit **XIII** (A4)
A1	Output to tilt ram **087** (bottom side)
X	Input to tilt ram **087** (rod side)
MA1	Bleed port

Functional characteristics: hose burst valve for tipping cylinder 088

Valve **088** covers the hose burst valve function at the lifting cylinder **087**. The hose burst valve prevents the load from being dumped out in the event of a break in the line on the bottom side of tilt ram 087.

Function

When tipping the telescopic arm, the volume flow from the control unit **XIII** (connection **A4**) coming from connection **A** to **A1**can flow into valve **088** via the non-return valve. To tilt out the boom a volume flow must be enabled from the bottom side of tilt ram **087** back to control unit **XIII**, this flow direction is initially blocked by the non-return valve in valve **088**. If tilting out is intended, the pressure on the rod side of the tilt ram **087** opens valve **088** via port **X** on the valve. The control pressure for the opening process is applied by a throttle and dissipated via a non-return valve in order to reduce vibrations.

A secondary valve is additionally integrated into valve **088**. In the event of external loads that are too heavy or a shock load that would cause too high a pressure being exerted on the bottom side of tilt ram **087**, the hose burst valve is also opened until the peak pressure has dissipated.

Rotary angle encoder B028 – transducer

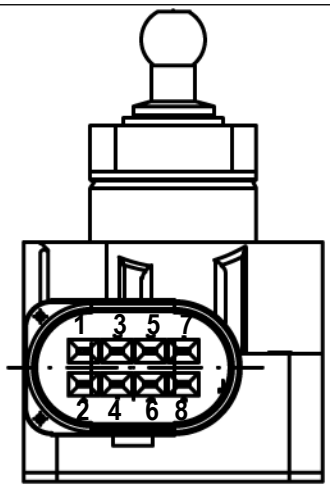

PIN	Component	from PIN	Measuring range
1	Input from controller N004	XE04 (2-34)	5 V
2	Output to controller N004	XE15 (1-30)	Signal 1 (0.5 – 4.5 V)
3	–	–	–
4	Input from controller N004	XE04 (2-34)	5 V
5	Output to controller N004	XE15 (1-06)	Signal 2 (0.5 – 4.5 V)
6	–	–	–
7	Input from controller N004	XE04 (2-17)	Ground (GND)
8	Input from controller N004	XE04 (2-17)	Ground (GND)

Function description

The transducer detects the angle of deflection for the emptying and filling. With this option, any angle of the tipping cylinder **087** can be saved. It can be retrieved via pushing touch button **S092**.

Joystick D002

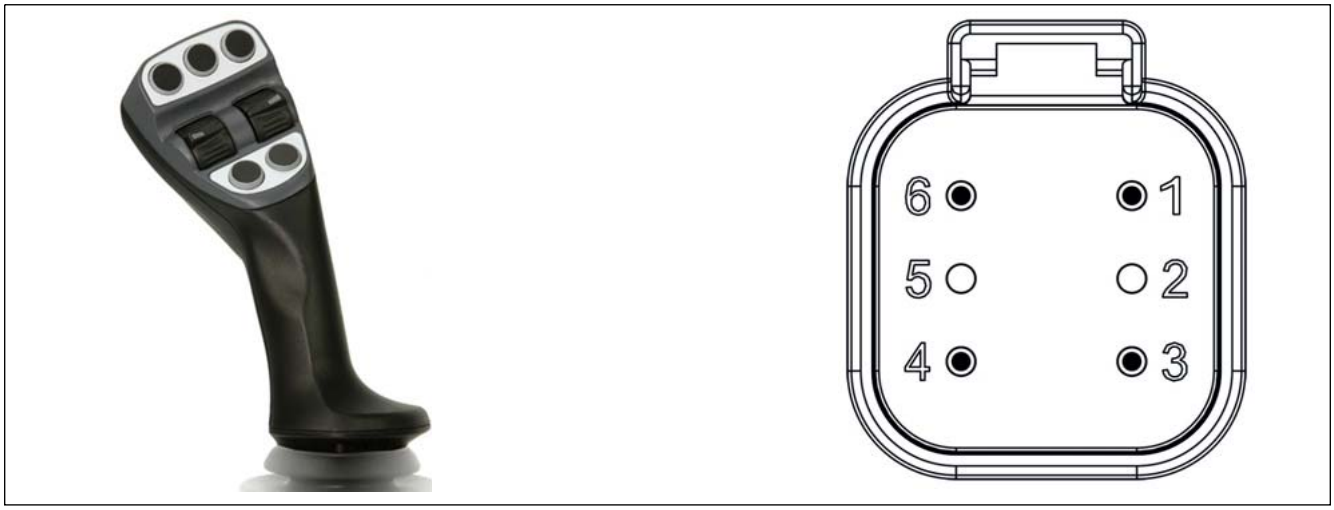

PIN	Connection	Measuring range
1	Ground (Klemme31)	Ground/cab
2	Voltage supply F010/3 A (KL30)	12 V
3	Switched voltage supply F032/5 A (KL15)	12 V
4	–	–
5	CAN 1	low
6	CAN 1	high

Description of joystick D002 (version 1)

Function description

The joystick is used to operate the loader unit as well as various additional functions.

The loader unit can only be completely operated by the control lever if:

1. the seat contact switch is actuated (operator in the seat)
2. Starter ON
3. the diesel engine is on
4. Lock for long-haul travel **S085** off

Front side of joystick D002

Pos.	Component	Function
A	Tip switch **S066**	The drive is deactivated (neutral)
B	Roller **S034/035**	Forward/reverse travel
C	Tip switch **S135**	Reduce speed level e.g. from hare to turtle
D	Tip switch **S136**	Increase speed level e.g. from turtle to hare
E	Tip switch **S110**	Reversing valve (front telescopic arm)
F	Roller **S038/039**	Extend/retract telescopic arm
G	Tip switch **S092**	Bucket repositioning

Reverse of joystick D002

Pos.	Component	Function
H	Roller **S030/031**	Unlock/lock third control circuit
I	Tip switch **S025**	Differential lock (Y009)

Description of joystick D002 (version 2)

Function description

The joystick is used to operate the loader unit as well as various additional functions.

The loader unit can only be completely operated by the control lever if:

1. the seat contact switch is actuated (operator in the seat)
2. Starter ON
3. the diesel engine is on
4. Lock for long-haul travel **S085** off

Front side of joystick D002

Pos.	Component	Function
A	Tip switch **S109**	Operation of electric circuit 1 of the 7-pole Front power outlet
B	Roller **S034/035**	Forward/reverse drive and neutral
C	Tip switch **S135**	Reduce speed level e.g. from hare to turtle
D	Tip switch **S136**	Increase speed level e.g. from turtle to hare
E	Tip switch **S110**	Reversing valve (front telescopic arm)
F	Roller **S038/039**	Extend/retract telescopic arm
G	Tip switch **S092**	Bucket repositioning

Reverse of joystick D002

Pos.	Component	Function
H	Roller **S030/031**	Unlock/lock third control circuit
I	Tip switch **S025**	Differential lock (**Y009**)

Load stabiliser pressure switch S045

Switching off of load stabiliser when filling shovel

The load stabiliser is automatically switched on when a pressure of 150 bar is applied to pressure switch **S045**. The pressure switch **S045**is built into the working ling of tipping cylinder **087** (A4 bottom side).

The reason for switching off

For the parallel guidance of the attachment tools, the tipping cylinder **087** is directly connected with the compensating cylinder **086**. In other words, the oil that is displaced by the lifting movements (raising/lowering) on the compensating cylinder **086** ends up in the tipping cylinder **087**.

If the load stabiliser is switched on, the lift cylinder **085** (A3 bottom side) is connected with the pressure reservoir **080**. The (B3 rod side) of the lift cylinder **085** with the tank**XX**. If the tipping cylinder **087** is tipped against the detent, the compensating cylinder **086** is simultaneously loaded with pressure on the bottom side. The compensating cylinder **086** can now lift the loader unit because the lift cylinder **085** on the (B3 rod side) is connected to the tank **XX**. In order to prevent this, for a pressure of 150 bar (2175.6 psi) at the tipping cylinder **087** (A4 bottom side) via the pressure switch **S045**, the load stabiliser is switched off. The lift cylinder **085** is thus locked again, and lifting by tipping is no longer possible.

Touch button S047 – load stabiliser in the keypad D004

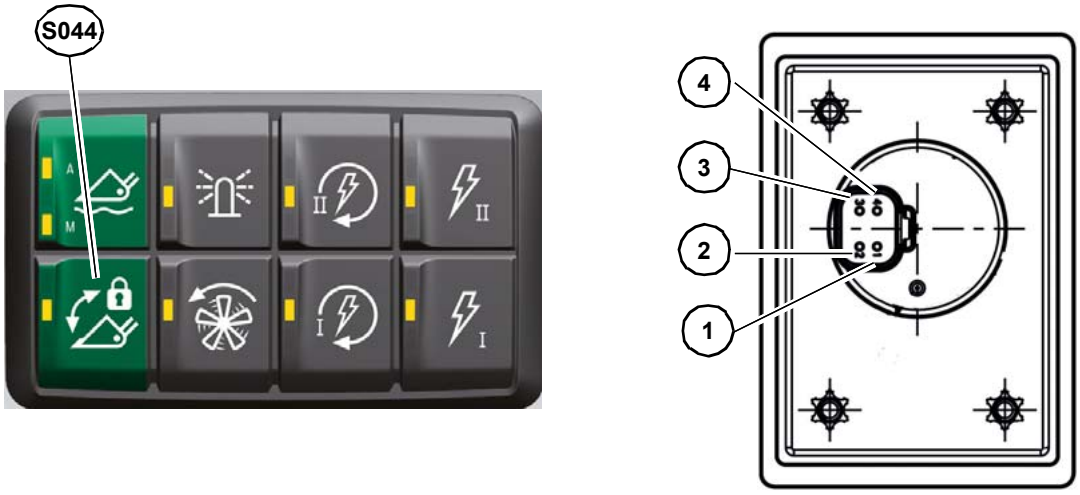

PIN	Connection	Measuring range
1	Voltage supply F032/5 A	12 V
2	Ground	Cabin
3	CAN 1	high
4	CAN 1	low

Function description

With the touch button **S047** in the keypad **D004,** the filling and emptying functions are locked. If the function is active, the touch button**S047** lights up.

Tipping cylinder lock switched on

With the touch button **S047** on the keypad **D004** a CAN message (CAN1) is sent to the controller **N004**. From the controller **N004**, the proportional valves **Y068** and **Y069** with a PWM signal.

The PIN 1-95 outlet on the controller **N004**is locked, and the proportional valve **Y068** (2) is not energized.

The PIN 1-71 outlet on the controller **N004**is locked, and the proportional valve **Y069** (2) is not energized.

Touch button S084 - hydraulic shut-down

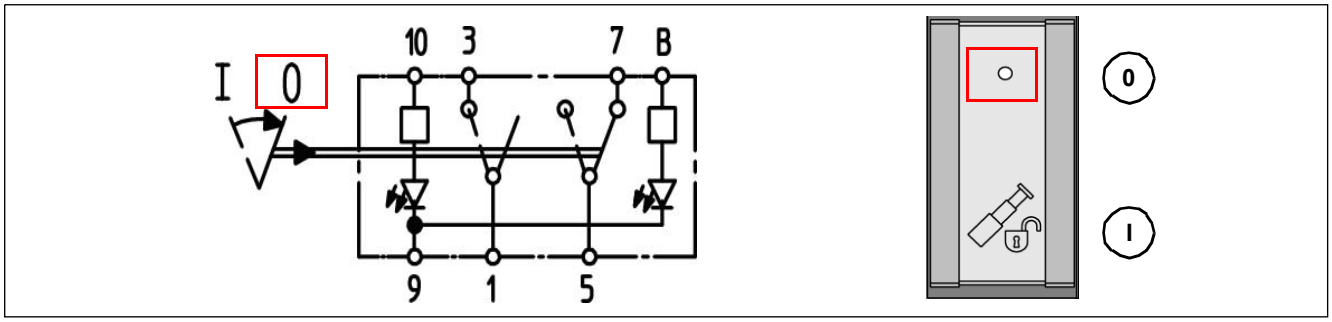

PIN	Connection	to PIN	Measuring range	
			not actuated (0)	actuated (I)
1	Output to controller N004	XE15 (1-16) S084 (B)	–	5 V
3	Input from controller N004	XE04 (2-21)	5 V	5 V
5	Output to controller N004	XE15 (1-40)	5 V	–
7	Input from controller N004	XE04 (2-21)	5 V	5 V
9	Lights	–	Earth (cab)	Earth (cab)
10	Lighting F018/10 A	–	12 V	12 V
B	Lighting for control	–	0 V	5 V

- ➥ If button **S084** is pressed in bucket mode, retraction of the boom is stopped.
- ➥ If button **S084** is pressed in fork-lift mode, retraction is stopped during lowering of the boom.
- ➥ If the touch button **S084** is actuated in manual mode, the lowering movement is continued with reduced speed.

Function description

When pressed, the touch button **S084** switches off the overload limit up to 60 s. The functions will then be controlled normally again.

In the case of an error, the bucket mode becomes active. Combined movements are stopped.

Touch button S085 – lock for long-haul travel in the keypad D003

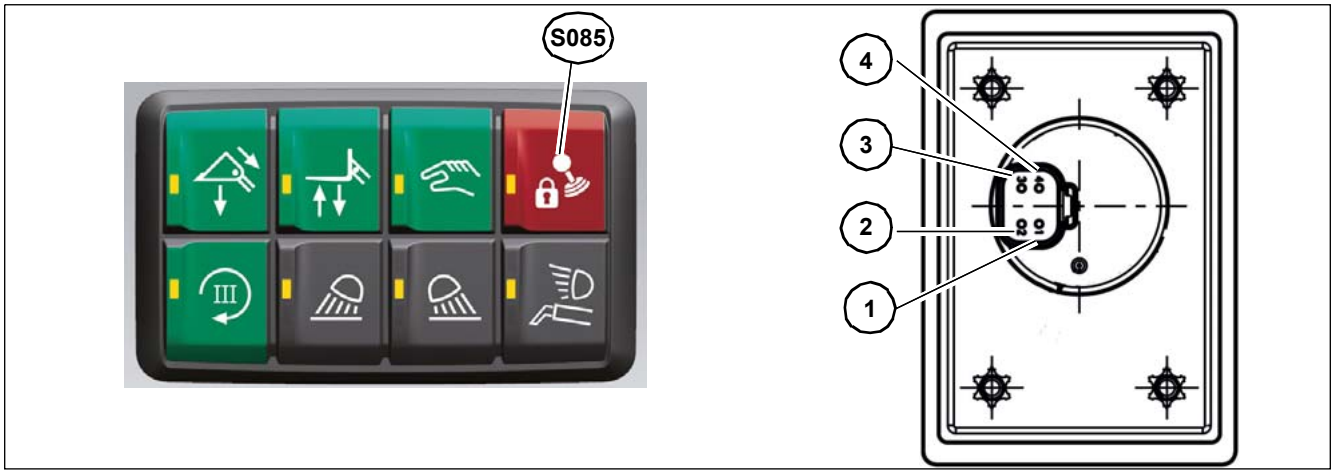

PIN	Connection	Measuring range
1	Voltage supply F032/5 A	12 V
2	Ground	Cabin
3	CAN 1	high
4	CAN 1	low

Function description

When the road travel lock function switch **S085** is switched to road travel lock ON, no hydraulic functions can be actuated. If the function is active, the touch button**S085** lights up.

Joystick shut-down switched on

With the touch button **S085** on the keypad **D003** a CAN message (CAN1) is sent to controller **N004**. The controller **N004** deactivates all outputs to the proportional valves on the control unit. In addition, all circuits of the 14-pole plug receptacle are deactivated.

Operator presence switch S104

The seat contact switch **S104** is composed of two switches that have been put into a single casing.

Driver not seated on the seat

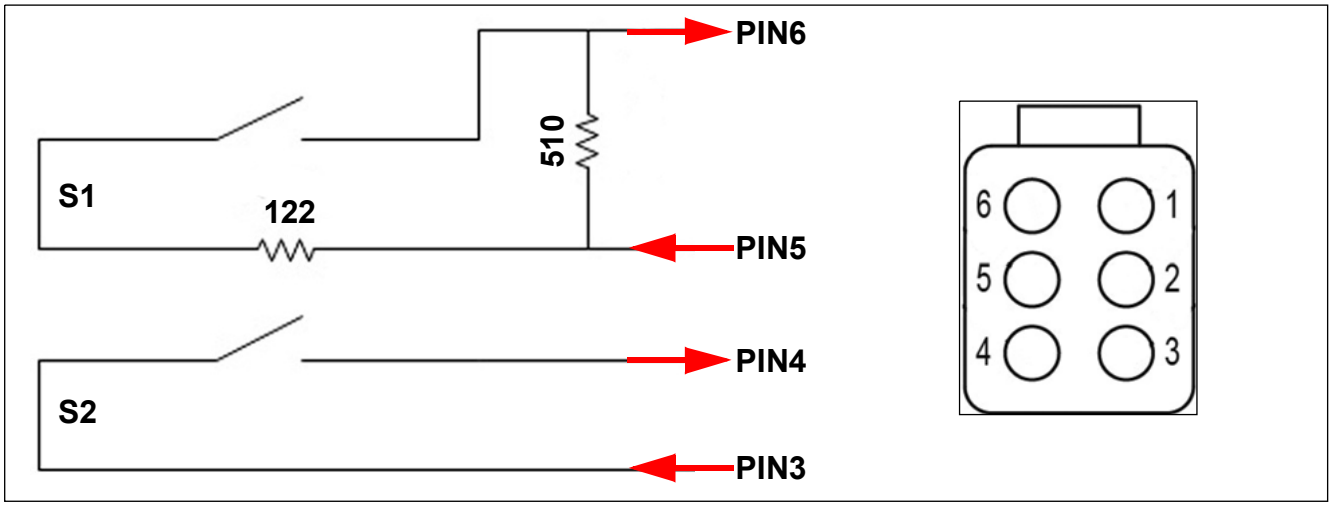

PIN	Connection	To PIN	Measuring range
1	Board voltage F038/25A (for air cushioned seat option)	–	12 V
2	Ground	Cabin	Ground
3	On-board voltage F014/5A	–	12 V
4	Signal to controller N004	XE15 (1-39)	0 V
5	Output from controller N004	XE15 (1-04)	12 V
6	Signal to controller N004	XE04 (2-44)	2 – 3 V

Operator not on seat when the function starts

Seat contact switch open

- Diesel engine cannot be started.
- The travel direction cannot be selected.

The following proportional valves are not energized.

1. Raising**Y066,** lowering **Y067** of telescopic arm
2. Fill shovel **Y068,** Empty shovel **Y069**
3. Retraction **Y023,** extension **Y024** of telescopic arm
4. Locking**Y016,** unlocking **Y017**
5. Solenoid valve for quickhitch lock **Y025**

Upper/lower rear additional control circuit

1. Raising **Y044** or lowering **Y045** tipper or raising **Y044**or lowering **Y045** auto hitch
2. Auto hitch tipper switch-over **Y046**
3. Unlock auto hitch **Y047**

Operator not in seat during active function

The following valves remain energized, even when the operator leaves the seat during the activated function.

Upper/lower rear additional control circuit

1. Raising **Y044**or lowering **Y045** tipper or raising **Y044** or lowering **Y045** auto hitch
2. Auto hitch tipper switch-over **Y046**
3. Locking permanent function of third control circuit **Y016**
4. Solenoid valve for changeover of front 4th control circuit **Y051**
5. PTO solenoid valve **Y120**
6. Rear hitch solenoid valves **Y117**, **Y118**, **Y129**

If the operator leaves the seat for longer than 3 s, the following functions will be stopped.

1. Retraction **Y023,** extension **Y024** of telescopic arm
2. Raising **Y066,** lowering **Y067** of telescopic arm
3. Fill shovel **Y068,** Empty shovel **Y069**
4. Locking **Y016,** unlocking **Y017**
5. If the lowering function**Y067** is still active after 3 s, the lowering speed is throttled in relation to the driving speed until the standstill of the lowering movement.
6. Below a speed of 7 km/h (4.3 mph), the drive is switched into neutral if the operator leaves the seat for more than 5 s.
7. If the driving speed is below 0.5 km/h (0.3 mph), after 1 s, it will be switched to neutral and a warning tone will sound.
8. A warning signal sounds at speeds over 7 km/h (4.3 mph)

Driver seated on the seat

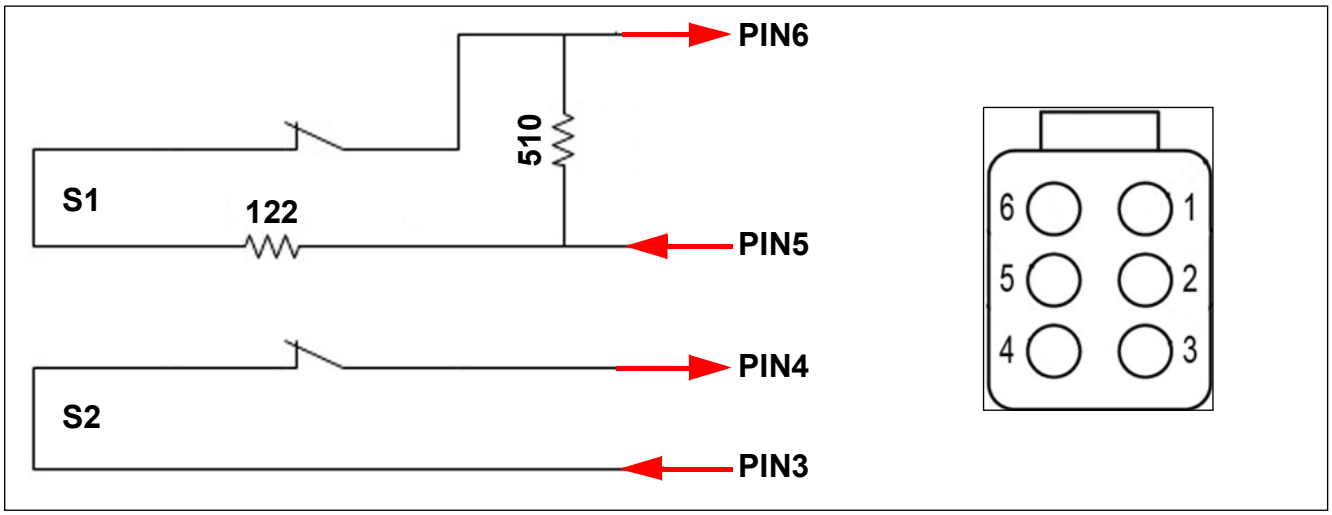

PIN	Connection	To PIN	Measuring range
1	Board voltage F038/25A (for air cushioned seat option)	–	12 V
2	Ground	Cabin	Ground
3	On-board voltage F014/5A	–	12 V
4	Signal to controller N004	XE15 (1-39)	12 V
5	Output from controller N004	XE15 (1-04)	12 V
6	Signal to controller N004	XE04 (2-44)	5 – 7 V

If a voltage of 5–7 V is applied to plug XE15 (1-04) and a voltage of 12 V to plug XE15 (1-39), the operator is in the operator's seat.

Seat contact switch closed

The vehicle can be used to its full extent

Machine runs without the driver on the seat

➥ The valves for the additional control circuits continue to be energised but have to be switched on before (operator on the seat)

If the operator leaves the seat for longer than 3 s, the following functions will be stopped.

1. Retraction **Y023,** extension **Y024** of telescopic arm
2. Raising **Y066,** lowering **Y067** of telescopic arm
3. Fill shovel **Y068,** Empty shovel **Y069**
4. Locking **Y016,** unlocking **Y017**
5. If the lowering function **Y067** is still active after 3 s, the lowering speed is throttled in relation to the driving speed until the standstill of the lowering movement.
6. Below a speed of 7 km/h (4.3 mph), the drive is switched into neutral if the operator leaves the seat for more than 5 s.
7. If the driving speed is below 0.5 km/h (0.3 mph), after 1 s, it will be switched to neutral and a warning tone will sound.
8. A warning signal sounds at speeds over 7 km/h (4.3 mph)

Belt contact switch S123 (option)

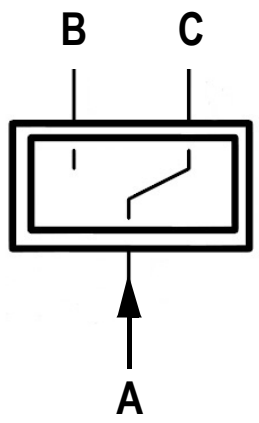

PIN	Connection	KCN (PIN)	Measuring range	
			buckled in	Not buckled in
A	On-board voltage F014/5A	–	12 V	12 V
B	Input to controller N004	XE15 (1-15)	10 V	0 V
C	Output to switching relay K110	K110 (86)	0 V	12 V

Seat belt not fastened

- Diesel engine cannot be started.
- The travel direction cannot be selected.

The following proportional valves are not energized.

1. Raising **Y066,** lowering **Y067** of telescopic arm
2. Fill shovel **Y068,** Empty shovel **Y069**
3. Retraction **Y023,** extension **Y024**of telescopic arm
4. Locking**Y016,** unlocking **Y017**
5. Solenoid valve for quickhitch lock **Y025**

Upper/lower rear additional control circuit

1. Raising **Y044**or lowering **Y045** tipper or raising **Y044** or lowering **Y045** auto hitch
2. Auto hitch tipper switch-over **Y046**

- Unlock auto hitch **Y047**

8.8 3rd control circuit (control)

Overview: control of the 3rd control circuit

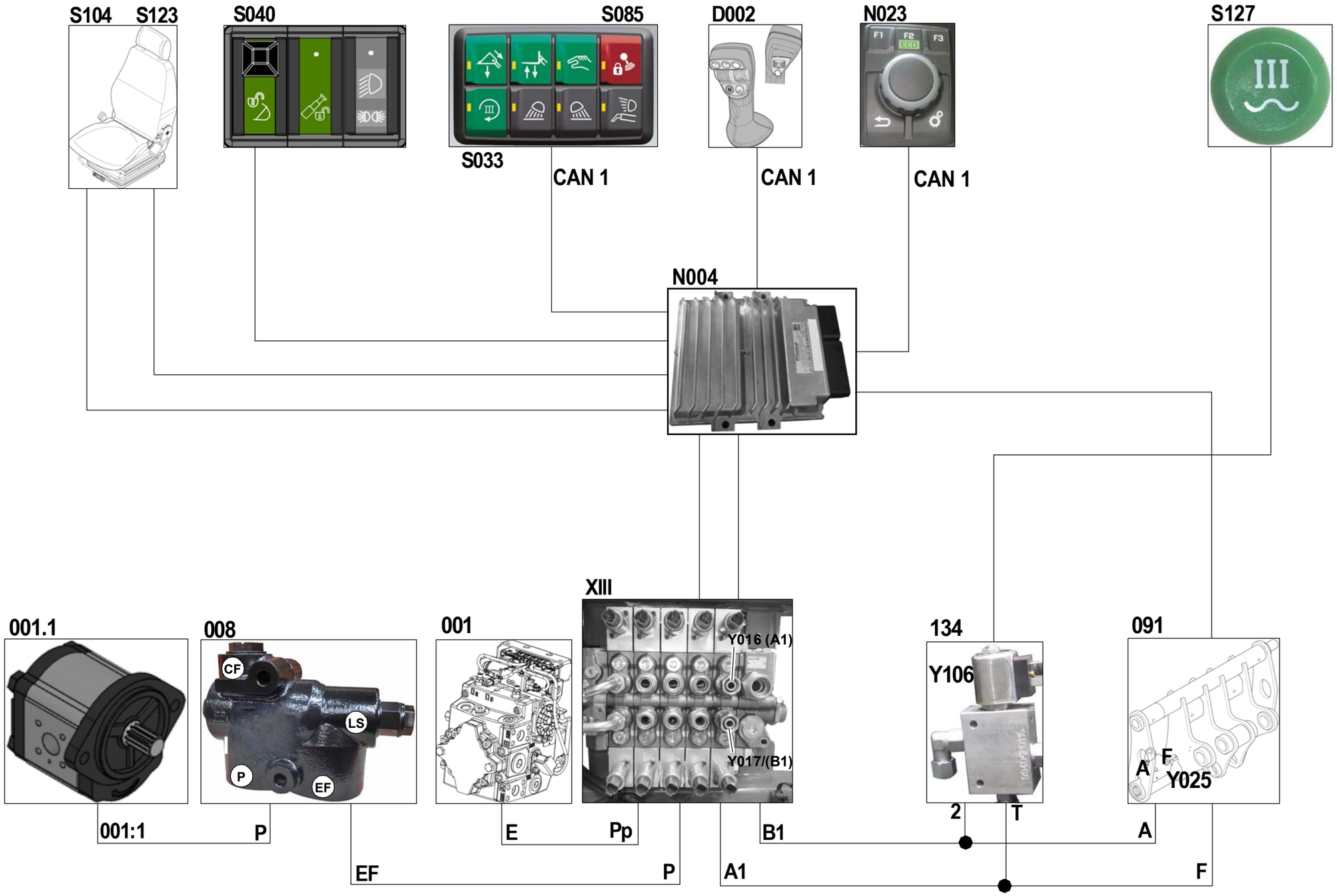

Description of 3rd control circuit

Hydraulic components

Pos.	Component	Remarks
XIII	Main control unit (hydraulics)	HDS24
001	Boost pump	12 ccm/U (0.732 in³)
001.1	Constant pump work hydraulics	36 ccm/U (2.196 in³)
008	Priority valve	–
077	Pilot control pressure accumulator	210 bar (3045.79 psi)
091	Lock cylinder	–
134	Pressure relief of 3rd control circuit	–

Electrical components

D002	Joystick	CAN 1
N004	Controller	HY-TTC 580-CP
N023	Oil volume setting	CAN 1
S033	Continuous operation of 3rd control circuit	CAN 1
S040	Quickhitch lock push button	5 V
S085	Joystick cut-off	CAN 1
S104	Operator presence switch	–
S123	Seat belt contact switch	–
S127	Pressure relief	12 V
Y016	Proportional valve (lock)	4,7 Ω
Y017	Proportional valve (unlock)	4,7 Ω
Y025	Quickhitch lock solenoid valve	12 V
Y106	Solenoid valve (pressure relief)	12 V

Pos.	Component	Designation
CAN1	CAN1 – Work hydraulics	–
CAN0	CAN0 – Drive	–

Hydraulic control unit XIII

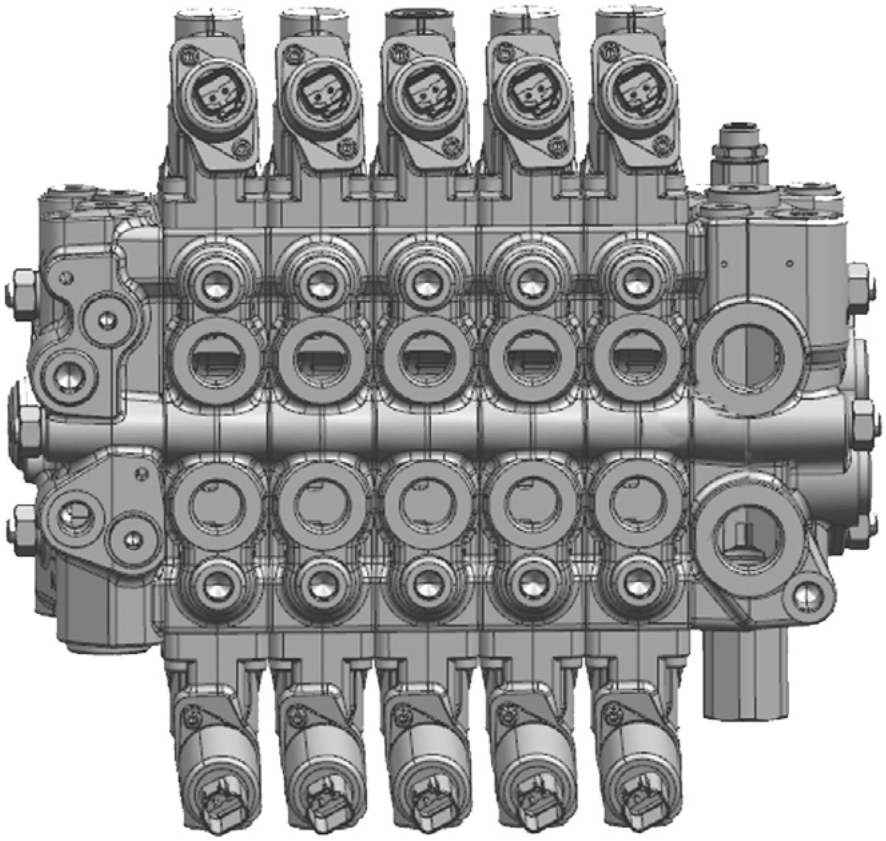

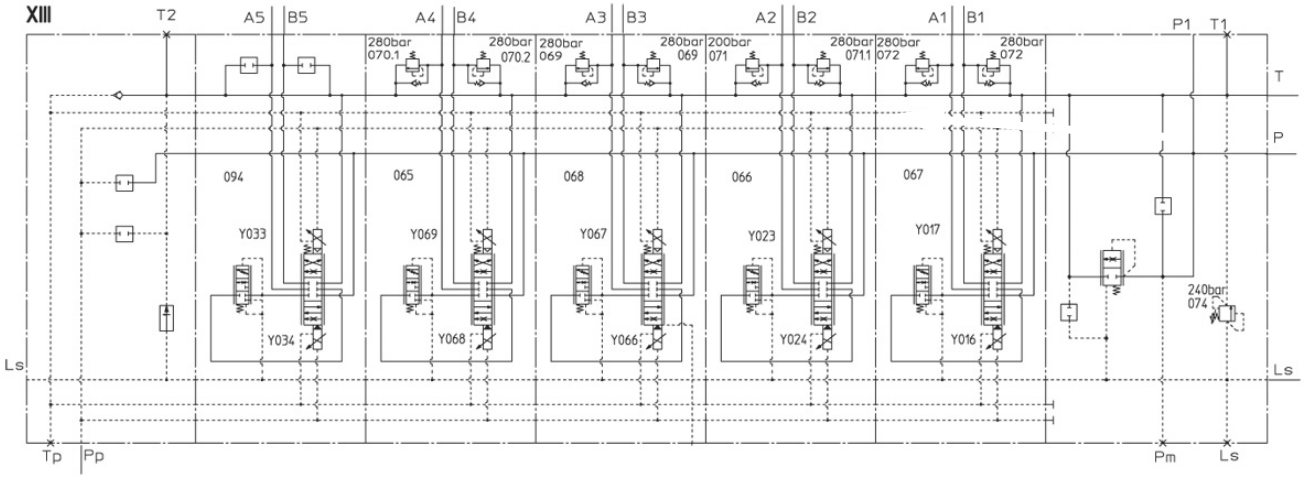

Hydraulic control unit XIII

Hydraulic control units **XIII** from 4 to 5 sections will be used. Section 5 does not have a secondary valve.

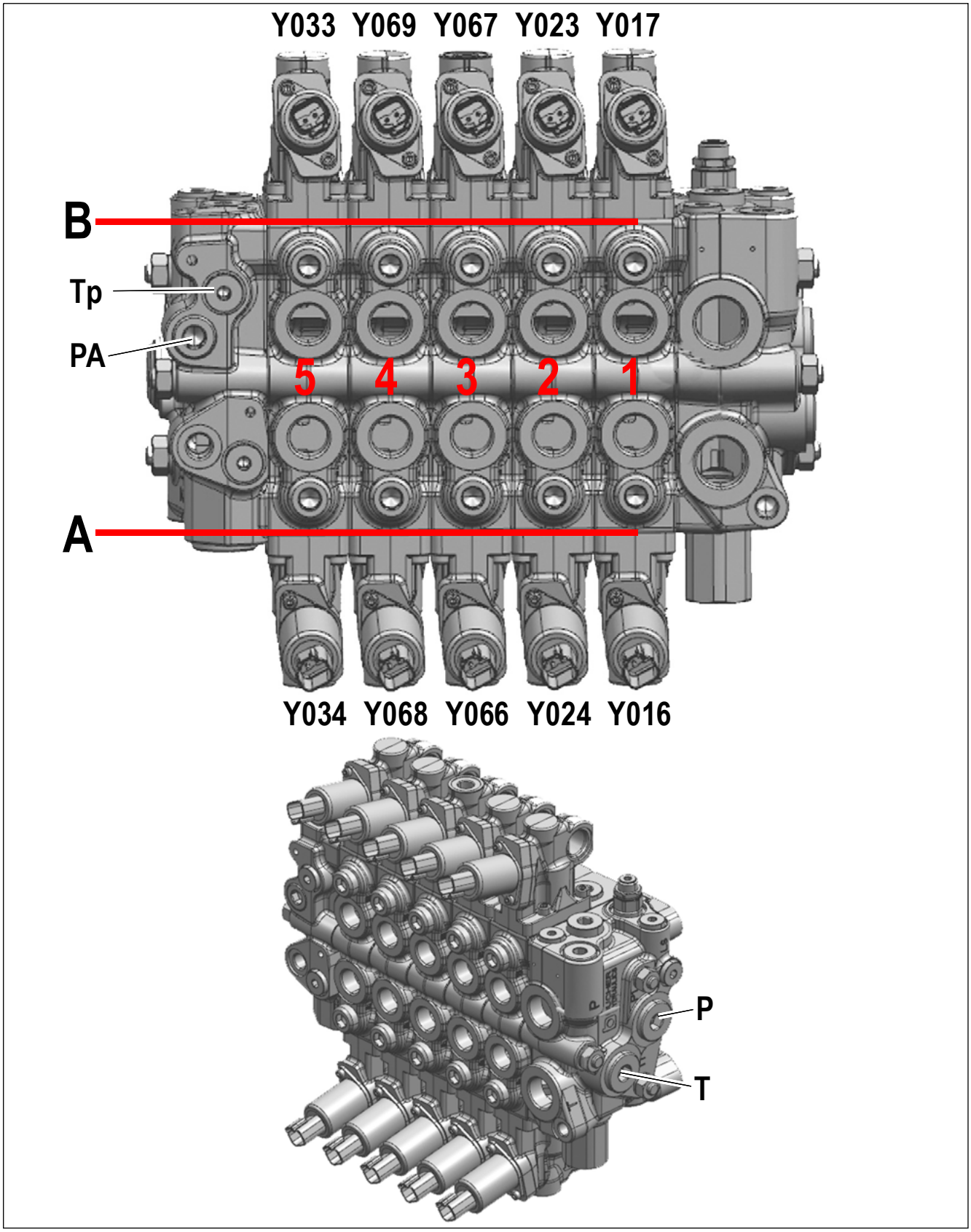

Description: control unit XIII

Pos.	Component	Remarks
A	Port designation on control valve XIII	Section 1–5 bottom side
B	Port designation on control valve XIII	Section 1–5 rod side
P	Work hydraulics pump I	36 ccm/U (2.196 in³)
PA	Pilot control (boost pressure)	Approx. 30 bar (435.10 psi)
T	Tank recirculation via the return filter	–
Tp	Tank venting for the pilot caps	–
Y016	Lock proportional valve (Section 1)	PWM 4.7 Ω
Y017	Unlock proportional valve (Section 1)	PWM 4.7 Ω
Y023	Retract proportional valve (Section 2)	PWM 4.7 Ω
Y024	Extend proportional valve (Section 2)	PWM 4.7 Ω
Y033	Proportional valve additional circuit (Section 5)	PWM 4.7 Ω
Y034	Proportional valve additional circuit (Section 5)	PWM 4.7 Ω
Y066	Raise proportional valve (Section 3)	PWM 4.7 Ω
Y067	Lower proportional valve (Section 3)	PWM 4.7 Ω
Y068	Tilt back proportional valve (Section 4)	PWM 4.7 Ω
Y069	Tip out proportional valve (Section 4)	PWM 4.7 Ω

Valves from hydraulic control unit XIII

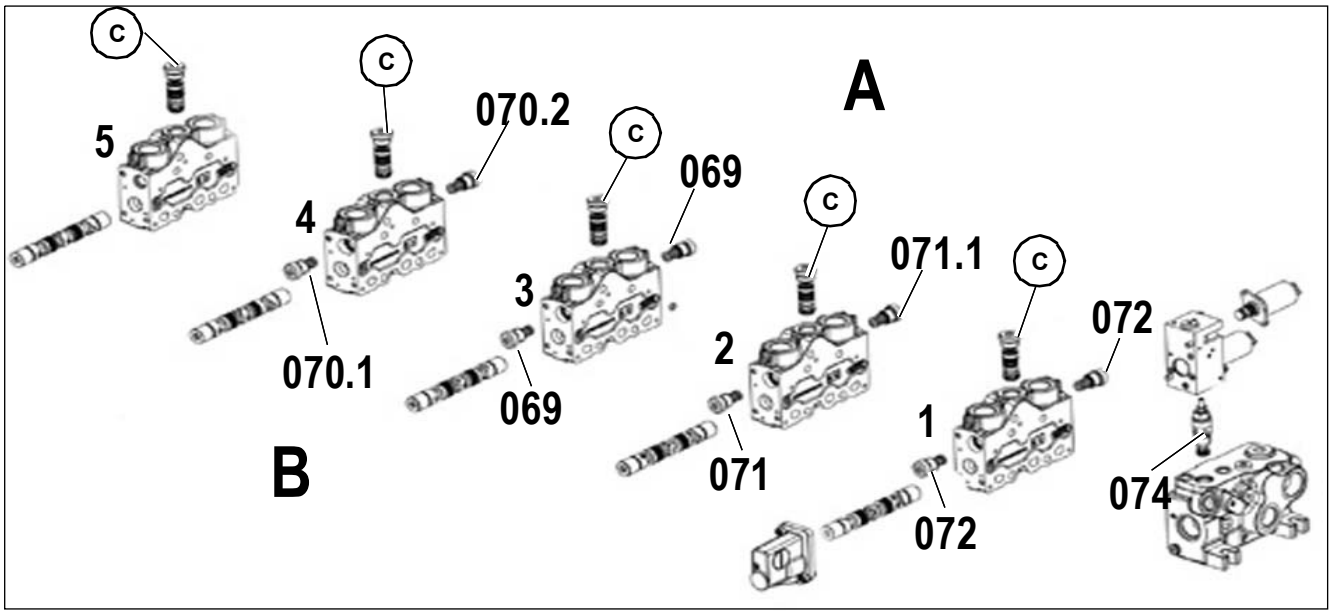

Description: control unit XIII

Pos.	Component	Remarks
1	3rd control circuit section 067	80 l/min (21.10 US gpm)
2	Push-out ram section 066	A2 – 100 l/min (26.4 US gpm) B2 – 80 l/min (21.10 US gpm)
3	Lift ram section 068	100 l/min (26.4 US gpm)
4	Tilt ram section 065	A4 – 100 l/min (26.4 US gpm) B4 – 80 l/min (21.10 US gpm)
5	Section rear additional control circuit Hitch/Tipper 094	80 l/min (21.10 US gpm)
A	Port designation on control valve XIII	Section 1–5 bottom side
B	Port designation on control valve XIII	Section 1–5 rod side
C	Pressure compensators	–
069	Secondary valve for raise lifting cylinder (B)	270–290 bar (3916–4206 psi)
069	Secondary valve for lower lifting cylinder (A)	270–290 bar (3916–4206 psi)
070.1	Secondary valve for tipping cylinder rod side fill shovel (A)	270–290 bar (3916–4206 psi)
070.2	Secondary valve for tipping cylinder bottom side empty shovel (B4)	270–290 bar (3916–4206 psi)
071	Secondary valve for push-out ram Extend bottom side (B)	190–210 bar (2755–3045 psi)
071.1	Secondary valve for push-out ram Retract rod side (A)	270–290 bar (3916–4206 psi)
072	Secondary valve 3rd control circuit, lock/unlock (A/B)	270–290 bar (3916–4206 psi)
074	LS pressure relief valve	240 bar (3480.91 psi)

Gear pump working hydraulics I

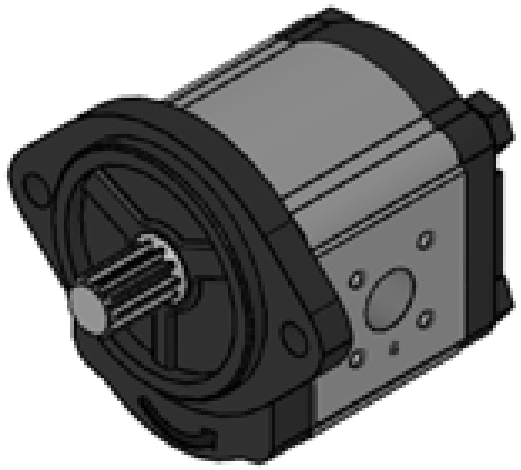

Component	Remarks	System pressure
I	36 ccm/U (2.196 in³)	230–250 bar (2320.6 – 2755.72 psi)

Function description

The gear pump for working hydraulics **I** supplies the steering orbitrol **IV** and the main control unit **XIII** with oil via the priority valve **008**. The oil flow is filtered by a high-pressure filter **167** directly after the gear pump **I**.

Priority valve 008

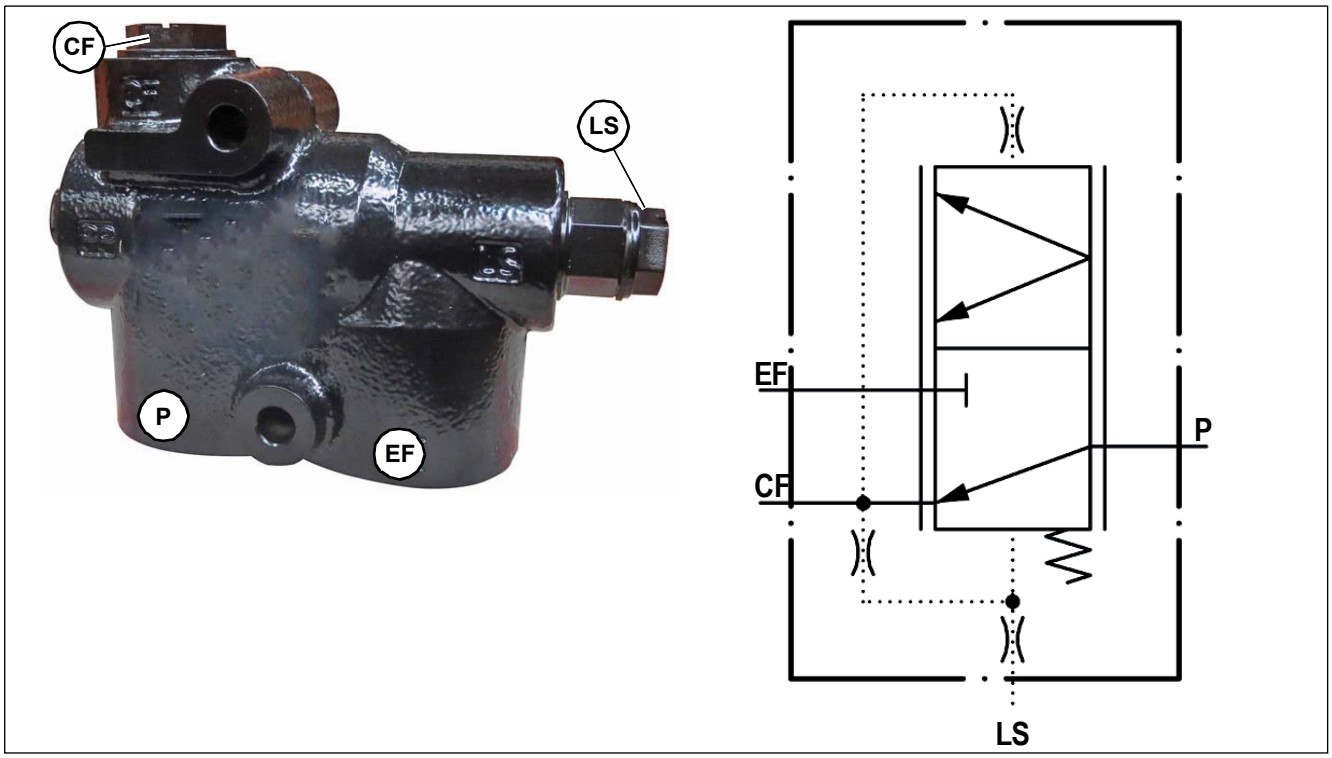

Connection	Power supply
P	Input from gear pump, working hydraulics **I**
LS	Input from steering orbitrol **IV**, port **LS**
CF	Output to steering orbitrol **IV**, port **P**
EF	Output to main control unit **XIII**, port **P1**

Function description

The priority valve **008** is responsible for dividing the oil flow from the gear pump work hydraulics **I into** the steering system and work hydraulics. Here, the oil is primarily supplied to the steering system **IV**.

Function

The oil flow coming from the gear pump **I** passes through port **P** and an internal duct of the priority valve **008** to the control spool. The control spool is then pushed against the spring via the area ratio and the oil flow is distributed evenly between the steering orbitrol **IV** and the main control unit **XIII**..

As soon as the steering orbitrol **IV** is actuated it generates an LS signal, which acts on the control spool of the priority valve **008**. Through the combination of the spring force and the LS signal the control spool is pushed back towards the initial position and the steering assumes priority. This can mean that functions of the working hydraulics are executed more slowly during steering.

Pressure accumulator 077

Important information

Membrane and hydraulic accumulators are pressure tanks in accordance with the European Pressure Equipment Directive 97/23/EC. Hydraulic accumulators are exclusively for the purpose of accumulating and discharging hydraulic fluids. Membrane or hydraulic accumulators consist of a fluid and a gas section with a membrane as gas-tight separating element.

DANGER

If the pressure accumulator is not filled correctly there is a risk of explosion! If pressure accumulators are filled with oxygen or air, they can explode!

This can result in serious injuries or even death.

► Only fill pressure accumulators with nitrogen.

Information

No welding or mechanical work may be carried out on the pressure accumulator!

We recommend checking the pretensioning pressure annually. This inspection may only be carried out by a skilled person with the respective qualification!

Component	Function	Remarks
077	Pilot control pressure accumulator	Gas filling overpressure 10 bar (145 psi)

Function description

Pressure accumulator **077** is the supply pressure for the pilot control. If the diesel engine fails this ensures that an emergency lowering manoeuvre can be carried out. It is also needed in order to release pressure from the individual control circuits.

Relief valve 134 (Y106)

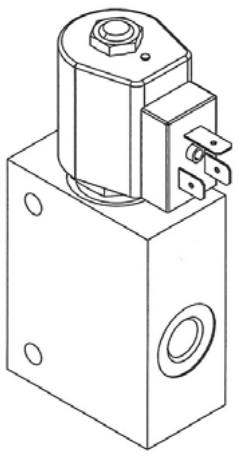

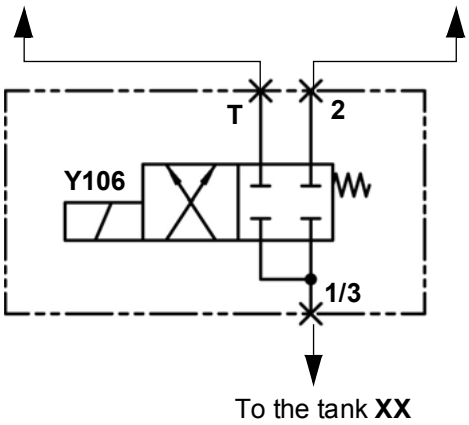

Connection	Power supply
T	Input from section A1
2	Input from section B1
1/3	Output to tank **XX**

Component	Function	Remarks
Y106	Solenoid valve (pressure relief)	12 V

Function description

With touch button **S127** on the telescopic arm, the pressure in the third control circuit is reduced via the relief valve **134** in order to be able to attach the quick hitch facility.

Joystick D002

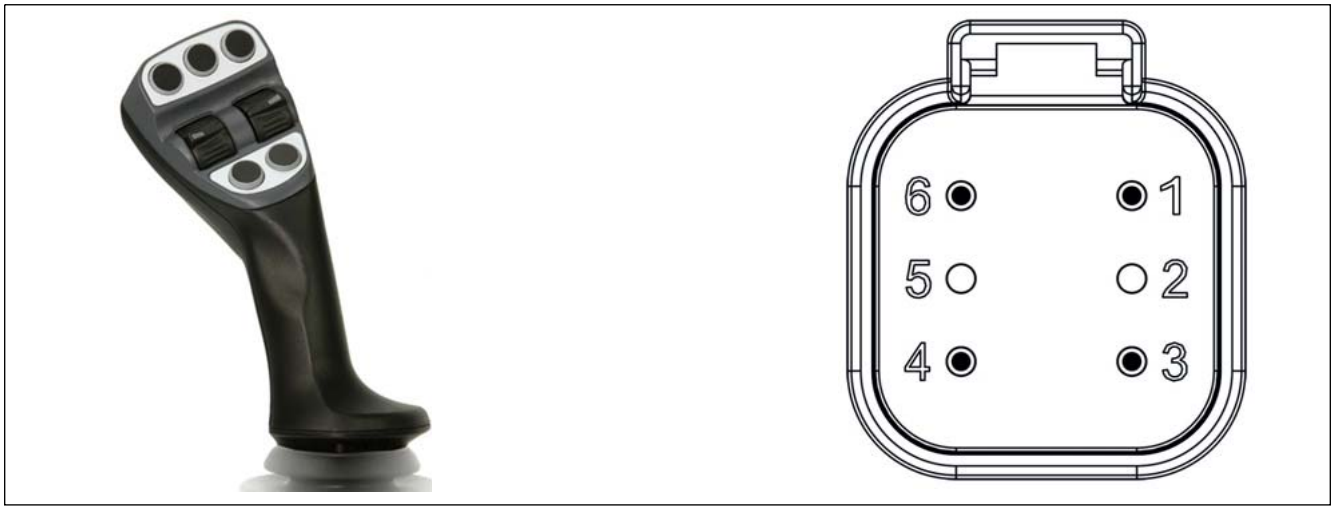

Pin assignment of Joystick D002

PIN	Component	Measuring range
1	Ground (KL31)	Cabin
2	Voltage supply F010/3 A (KL30)	12 V
3	Switched voltage supply F032/5 A (KL15)	12 V
4	–	–
5	CAN 1	low
6	CAN 1	high

Description of joystick D002 (version 1)

Functional characteristics of joystick (handle)

The joystick is used to operate the loader unit as well as various additional functions.

The loader unit can only be completely operated by the control lever if:

1. the seat contact switch is actuated (operator in the seat)
2. Starter ON
3. the diesel engine is on
4. Lock for long-haul travel **S085** off

Front side of joystick D002

Pos.	Component	Function
A	Tip switch **S066**	The drive is deactivated (neutral)
B	Roller **S034/035**	Forward/reverse travel
C	Tip switch **S135**	Reduce speed level e.g. from hare to turtle
D	Tip switch **S136**	Increase speed level e.g. from turtle to hare
E	Tip switch **S110**	Reversing valve (front telescopic arm)
F	Roller **S038/039**	Extend/retract telescopic arm
G	Tip switch **S092**	Bucket repositioning

Reverse of joystick D002

Pos.	Component	Function
H	Roller **S030/031**	Unlock/lock third control circuit
I	Tip switch **S025**	Differential lock (**Y009**)

Description of joystick D002 (version 2)

Functional characteristics of joystick (handle)

The joystick is used to operate the loader unit as well as various additional functions.

The loader unit can only be completely operated by the control lever if:

1. the seat contact switch is actuated (operator in the seat)
2. Starter ON
3. the diesel engine is on
4. Lock for long-haul travel **S085** off

Front side of joystick D002

Pos.	Component	Function
A	Tip switch **S109**	Operation of electric circuit 1 of the 7-pole Front power outlet
B	Roller **S034/035**	Forward/reverse drive and neutral
C	Tip switch **S135**	Reduce speed level e.g. from hare to turtle
D	Tip switch **S136**	Increase speed level e.g. from turtle to hare
E	Tip switch **S110**	Reversing valve (front telescopic arm)
F	Roller **S038/039**	Extend/retract telescopic arm
G	Tip switch **S092**	Bucket repositioning

Reverse of joystick D002

Pos.	Component	Function
H	Roller **S030/031**	Unlock/lock third control circuit
I	Tip switch **S025**	Differential lock (**Y009**)

Description of oil quantity adjustment N023

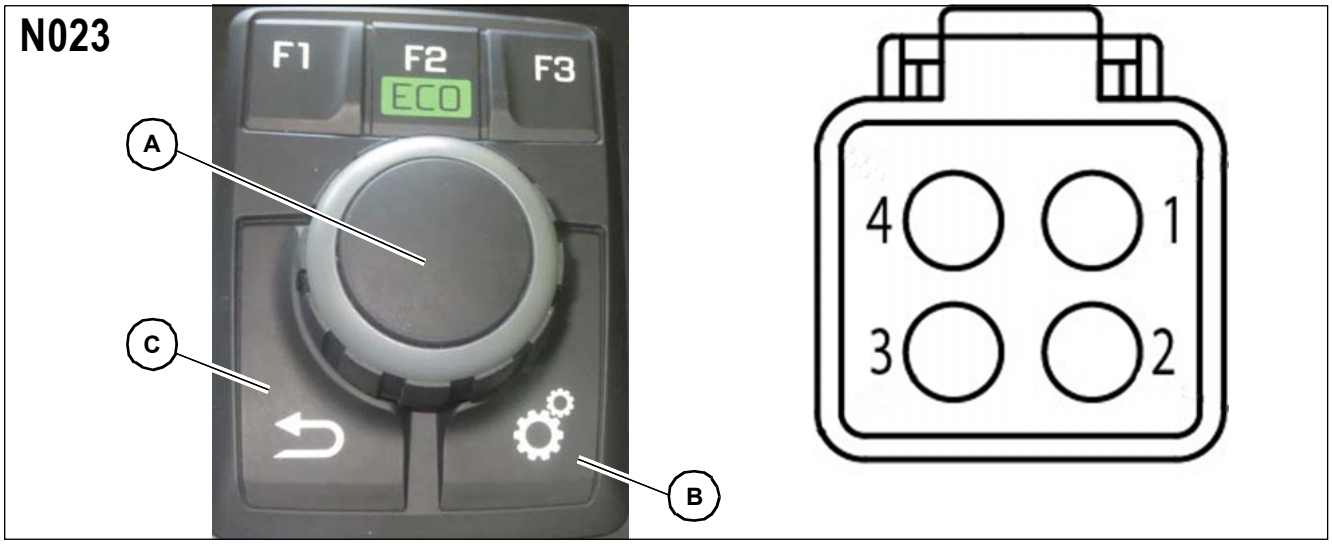

Pin assignment of oil quantity adjustment N023

PIN	Component	Measuring range
1	Voltage supply F032/5 A	12 V
2	Ground	Cabin
3	CAN 1	high
4	CAN 1	low

Function description

In order to be able to use the oil quantity adjustment, the ignition must be switched on, the seat must be occupied.

The CAN message is sent to controller **N004** Pin 2-10 (CAN1-LOW) and PIN 2-23 (CAN1-High).

Selection types

PIN	Component
F1	Touch button for locking/unlocking oil quantity adjustment **S030/031**
F2	Touch button for oil quantity adjustment of third control circuit **S033**
F3	Touch button for oil quantity adjustment of tipper **S070**, fourth additional control circuit in the rear **S069**
A	Rotary switch for modifying the value
B	Hold touch button for 3 s in order to access the menu for oil quantity adjustment
C	Touch button for cancel or return

Change quantity of oil

Turn rotary switch **A** to the right

➥ Value is increased

Turn rotary switch **A** to the left

➥ Value is decreased

Press rotary switch **A** in order to confirm the value

Touch button S033 – continuous function of third control circuit in the keypad D003

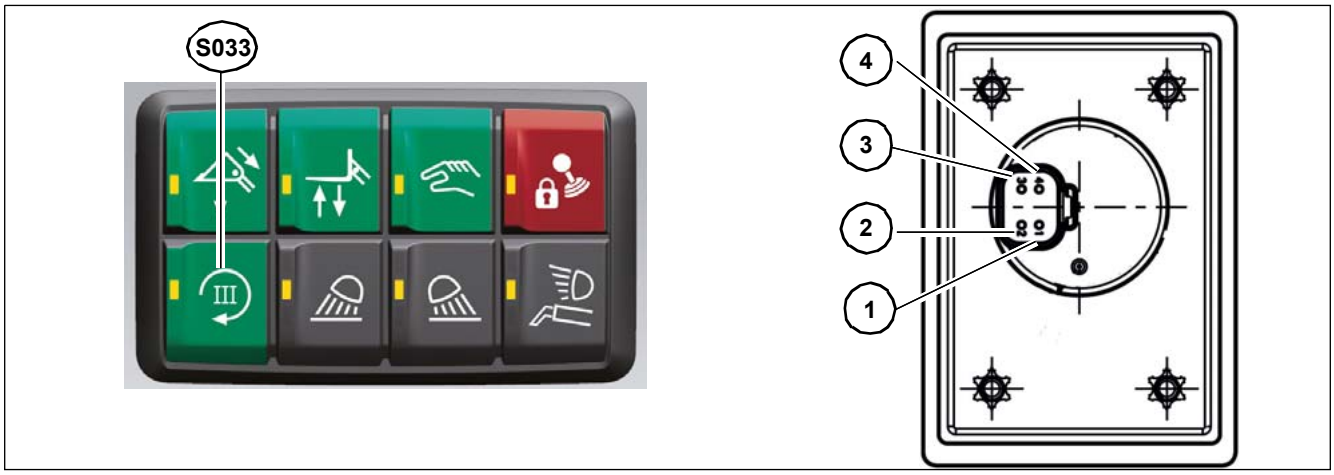

Pin assignment of keypad D003

PIN	Component	Measuring range
1	Voltage supply F032/5 A	12 V
2	Ground	Cabin
3	CAN 1	high
4	CAN 1	low

Function description

With the touch button **S033** continuous function of the third control circuit, the pre-set amount of oil will be made permanently available. The roller **S030/031** in the joystick **D002** is blocked. If the function is active, the touch button **S033** lights up.

Continuous function of third control circuit switched on

With the touch button **S033** on the keypad **D003**, a CAN message (CAN1) is sent to the controller **N004**. The controller **N004** PIN 1-54 energizes the proportional valve **Y016**.

Touch button S040 - quick hitch system lock

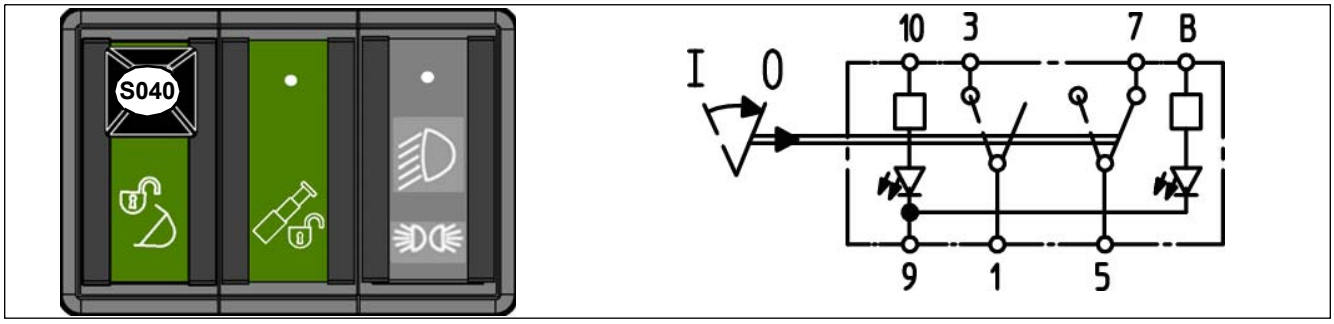

Touch button S040 quick coupling lock switched off 0

PIN	Component	Measuring range
1	Output to controller N004 XE15 (1-17)	0 V
3	Output from controller N004 XE04 (2-21)	5 V
5	Output to controller N004 XE15 (1-41)	5 V
7	Output from controller N004 XE04 (2-21)	5 V
9	Lighting ground (cab)	
10	Board voltage lighting F018/10 A	12 V
B	Lighting for control	0 V

Touch button S040 quick coupling lock switched on 1

PIN	Component	Measuring range
1	Output to controller N004 XE15 (1-17)	5 V
3	Output from controller N004 XE04 (2-21)	5 V
5	Output to controller N004 XE15 (1-41)	0 V
7	Input from controller N004 XE04 (2-21)	5 V
9	Lighting ground (cab)	
10	Board voltage lighting F018/10 A	12 V
B	Lighting for control	5 V

Function description

With the touch button **S040** quick coupler system lock, the functions quick coupler system unlock **Y025,** emergency lowering via lowering **Y067** and auto hitch lock **Y047** are controlled.

Touch button S085 – joystick shut-down for road travel (lock for long-haul travel) in the keypad D003

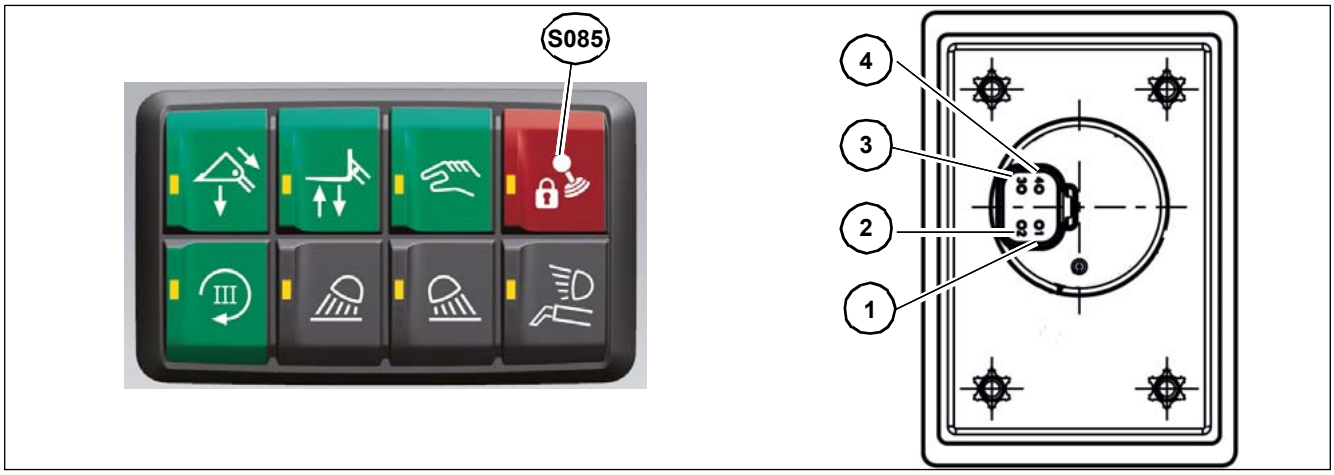

Pin assignment of keypad D003

PIN	Component	Measuring range
1	Voltage supply F032/5 A	12 V
2	Ground	Cabin
3	CAN 1	high
4	CAN 1	low

Function description

When the road travel lock function switch **S085** is switched to road travel lock ON, no hydraulic functions can be actuated. If the function is active, the touch button **S085** lights up.

Joystick shut-down switched on

With the touch button **S085** on the keypad **D003** a CAN message (CAN1) is sent to controller **N004**. The controller **N004** deactivates all outputs to the proportional valves on the control unit.

Operator presence switch S104

The seat contact switch **S104** is composed of two switches that have been put into a single casing.

Driver not seated on the seat

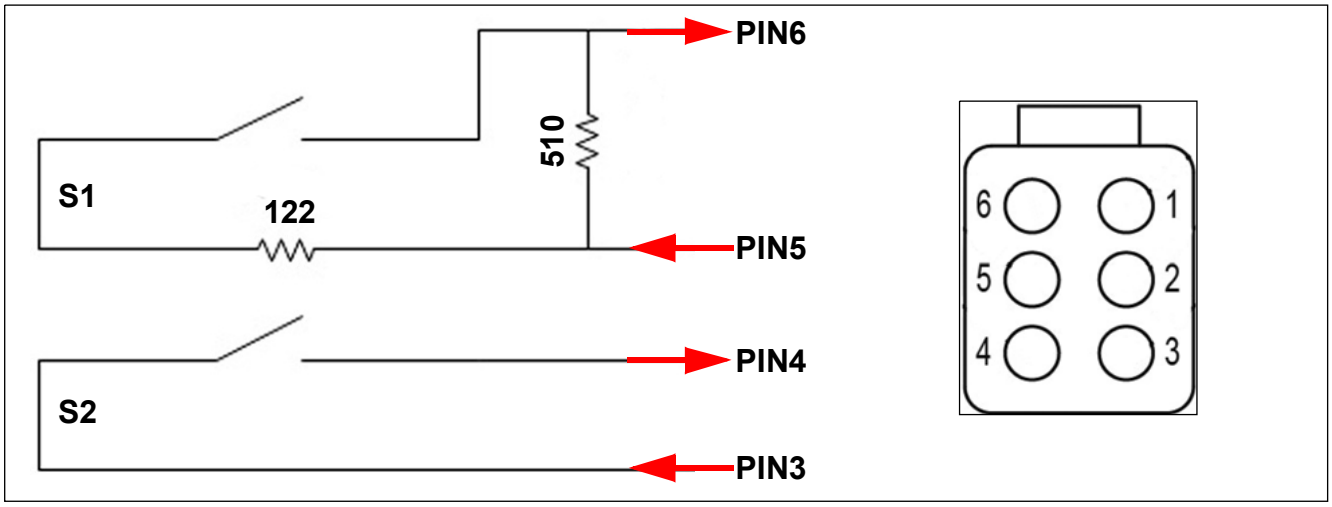

PIN	Component	To PIN	Measuring range
1	Board voltage F038/25A (for air cushioned seat option)	–	12 V
2	Ground	Cabin	Ground
3	On-board voltage F014/5A	–	12 V
4	Signal to the controller N004	XE15 (1-39)	0 V
5	Output from controller N004	XE15 (1-04)	12 V
6	Signal to the controller N004	XE04 (2-44)	2 – 3 V

Operator not on seat when the function starts

Seat contact switch open

- Diesel engine cannot be started.
- The travel direction cannot be selected.

The following proportional valves are not energized.

1. Raising **Y066,** lowering **Y067** of telescopic arm
2. Fill shovel **Y068,** Empty shovel **Y069**
3. Retraction **Y023,** extension **Y024** of telescopic arm
4. Locking **Y016,** unlocking **Y017**
5. Solenoid valve for quickhitch lock **Y025**

Upper/lower rear additional control circuit

1. Raising **Y044** or lowering **Y045** tipper or raising **Y044** or lowering **Y045** auto hitch
2. Auto hitch tipper switch-over **Y046**
3. Unlock auto hitch **Y047**

Operator not in seat during active function

The following valves remain energized, even when the operator leaves the seat during the activated function.

Upper/lower rear additional control circuit

1. Raising **Y044** or lowering **Y045** tipper or raising **Y044** or lowering **Y045** auto hitch
2. Auto hitch tipper switch-over **Y046**
3. Locking permanent function of third control circuit **Y016**
4. Solenoid valve for changeover of front 4th control circuit **Y051**
5. PTO solenoid valve **Y120**
6. Rear hitch solenoid valves **Y117**, **Y118**, **Y129**

If the operator leaves the seat for longer than 3 s, the following functions will be stopped.

1. Retraction **Y023,** extension **Y024** of telescopic arm
2. Raising **Y066,** lowering **Y067** of telescopic arm
3. Fill shovel **Y068,** Empty shovel **Y069**
4. Locking **Y016,** unlocking **Y017**
5. If the lowering function**Y067** is still active after 3 s, the lowering speed is throttled in relation to the driving speed until the standstill of the lowering movement.
6. Below a speed of 7 km/h (4.3 mph), the drive is switched into neutral if the operator leaves the seat for more than 5 s.
7. If the driving speed is below 0.5 km/h (0.3 mph), after 1 s, it will be switched to neutral and a warning tone will sound.
8. A warning signal sounds at speeds over 7 km/h (4.3 mph)

Driver seated on the seat

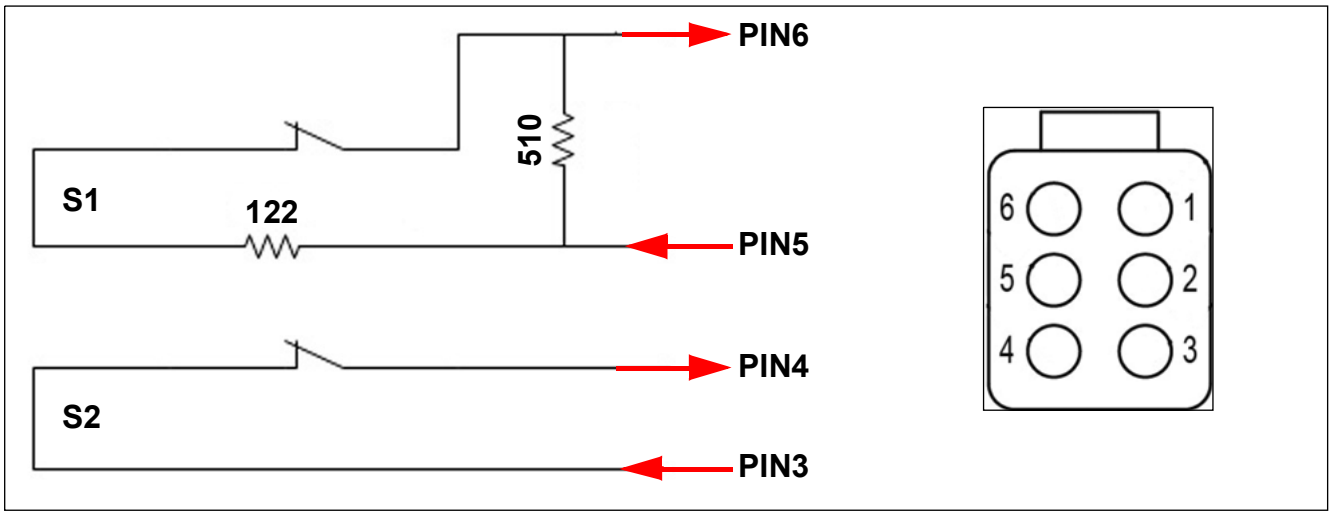

PIN	Component	To PIN	Measuring range
1	Board voltage F038/25A (for air cushioned seat option)	–	12 V
2	Ground	Cabin	Ground
3	On-board voltage F014/5A	–	12 V
4	Signal to the controller N004	XE15 (1-39)	12 V
5	Output from controller N004	XE15 (1-04)	12 V
6	Signal to the controller N004	XE04 (2-44)	5 – 7 V

If a voltage of 5–7 V is applied to plug XE15 (1-04) and a voltage of 12 V to plug XE15 (1-39), the operator is in the operator's seat.

Seat contact switch closed

The vehicle can be used to its full extent

Machine runs without the driver on the seat

➥ The valves for the additional control circuits continue to be energised but have to be switched on before (operator on the seat)

If the operator leaves the seat for longer than 3 s, the following functions will be stopped.

1. Retraction **Y023,** extension **Y024** of telescopic arm
2. Raising **Y066,** lowering **Y067** of telescopic arm
3. Fill shovel **Y068,** Empty shovel **Y069**
4. Locking **Y016,** unlocking **Y017**
5. If the lowering function**Y067** is still active after 3 s, the lowering speed is throttled in relation to the driving speed until the standstill of the lowering movement.
6. Below a speed of 7 km/h (4.3 mph), the drive is switched into neutral if the operator leaves the seat for more than 5 s.
7. If the driving speed is below 0.5 km/h (0.3 mph), after 1 s, it will be switched to neutral and a warning tone will sound.
8. A warning signal sounds at speeds over 7 km/h (4.3 mph)

Belt contact switch S123 (option)

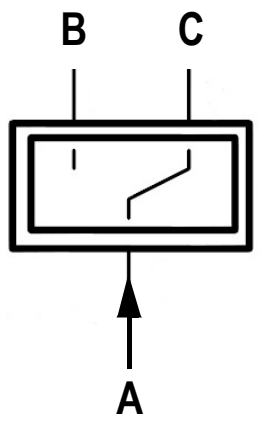

PIN	Component	KCN (PIN)	Measuring range	
			buckled in	Not buckled in
A	On-board voltage F014/5A	–	12 V	12 V
B	Input to controller N004	XE15 (1-15)	10 V	0 V
C	Output to switching relay K110	K110 (86)	0 V	12 V

Seat belt not fastened

- Diesel engine cannot be started.
- The travel direction cannot be selected.

The following proportional valves are not energized.

1. Raising **Y066,** lowering **Y067** of telescopic arm
2. Fill shovel **Y068,** Empty shovel **Y069**
3. Retraction **Y023,** extension **Y024** of telescopic arm
4. Locking **Y016,** unlocking **Y017**
5. Solenoid valve for quickhitch lock **Y025**

Upper/lower rear additional control circuit

1. Raising **Y044** or lowering **Y045** tipper or raising **Y044** or lowering **Y045** auto hitch
2. Auto hitch tipper switch-over **Y046**

- Unlock auto hitch **Y047**

Switch S127 (touch button) - pressure relief

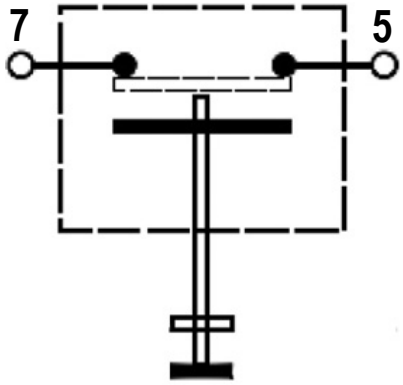

Switch S127 (tip switch) pressure relief not pressed

PIN	Component	PIN	Measuring range
5	On-board voltage F082/3A	X402 (6)	12 V
7	Output to solenoid valve Y106	XR05 (4)	0 V

Switch S127 (tip switch) pressure relief pressed

PIN	Component	PIN	Measuring range
5	On-board voltage F082	X402 (6)	12 V
7	Output to solenoid valve Y106	XR05 (4)	12 V

Function description

Pressure relief is required in order to relieve the pressure in the 3rd control circuit so that the hydraulic lines can be connected or disconnected.

Electric control

If button **S127** is pressed, voltage is supplied to solenoid valve **Y106**.

8.9 Reversing valve of third control circuit

Overview: reversing valve of third control circuit

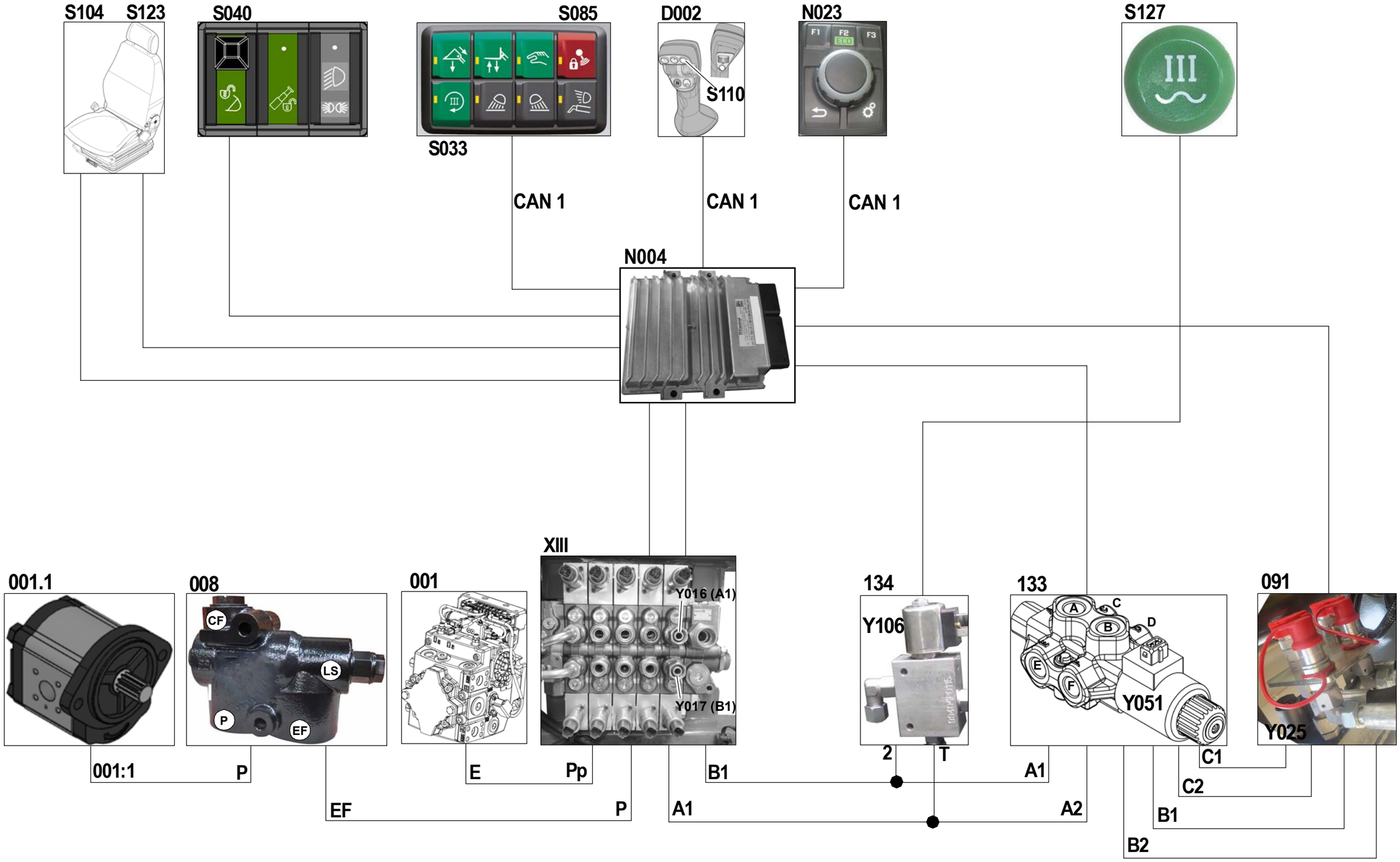

Description of 3rd control circuit changeover valve

Hydraulic components

Pos.	Component	Remarks
XIII	Main control unit (hydraulics)	HDS24
001	Boost pump	12 cm³/rev
001.1	Constant pump work hydraulics	36 ccm/U (2.196 in³)
008	Priority valve	–
091	Lock cylinder	–
133	Switch-over of front fourth service (lock/unlock)	–
134	Pressure relief of 3rd control circuit	–

Electrical components

D002	Joystick	CAN 1
N004	Controller	HY-TTC 580-CP
N023	Oil volume setting	CAN 1
S033	Continuous operation of 3rd control circuit	CAN 1
S040	Quickhitch lock push button	5 V
S085	Joystick cut-off	CAN 1
S104	Operator presence switch	–
S110	Touch button joystick D002 electric connection 2	CAN 1
S123	Seat belt contact switch	–
S127	Pressure relief	12 V
Y016	Proportional valve (lock)	4,7 Ω
Y017	Proportional valve (unlock)	4,7 Ω
Y025	Quickhitch lock solenoid valve	12 V
Y051	Solenoid valve for switch-over of front fourth service (lock/unlock)	12 V
Y106	Solenoid valve (pressure relief)	12 V

Pos.	Component	Designation
CAN1	CAN1 – Work hydraulics	–
CAN0	CAN0 – Drive	–

Hydraulic control unit XIII

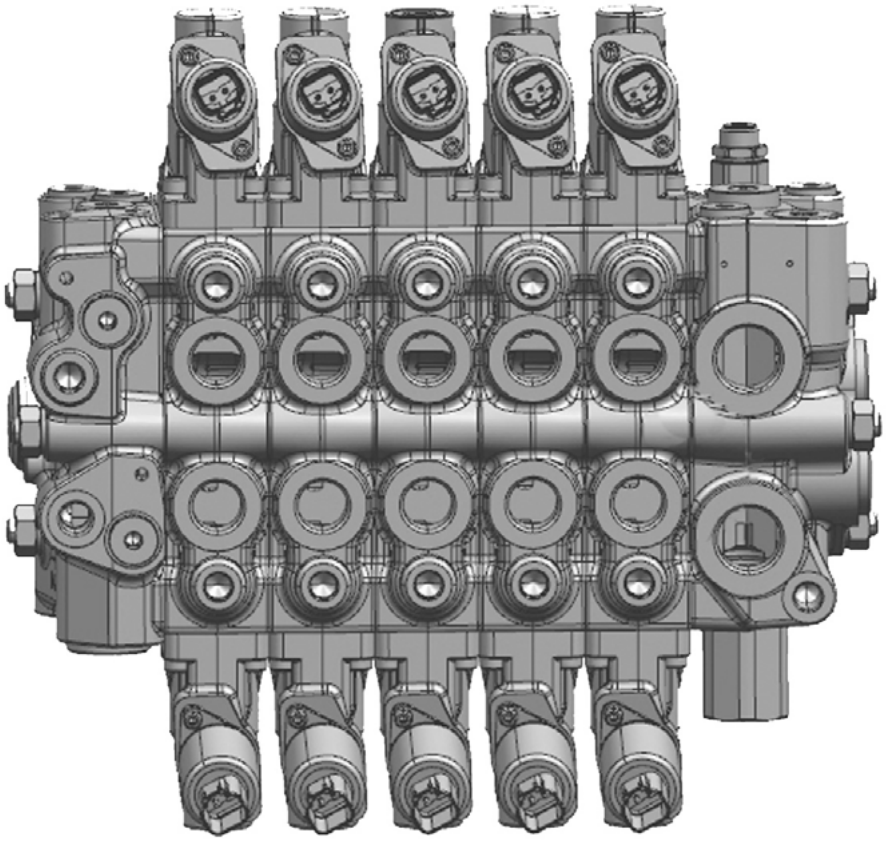

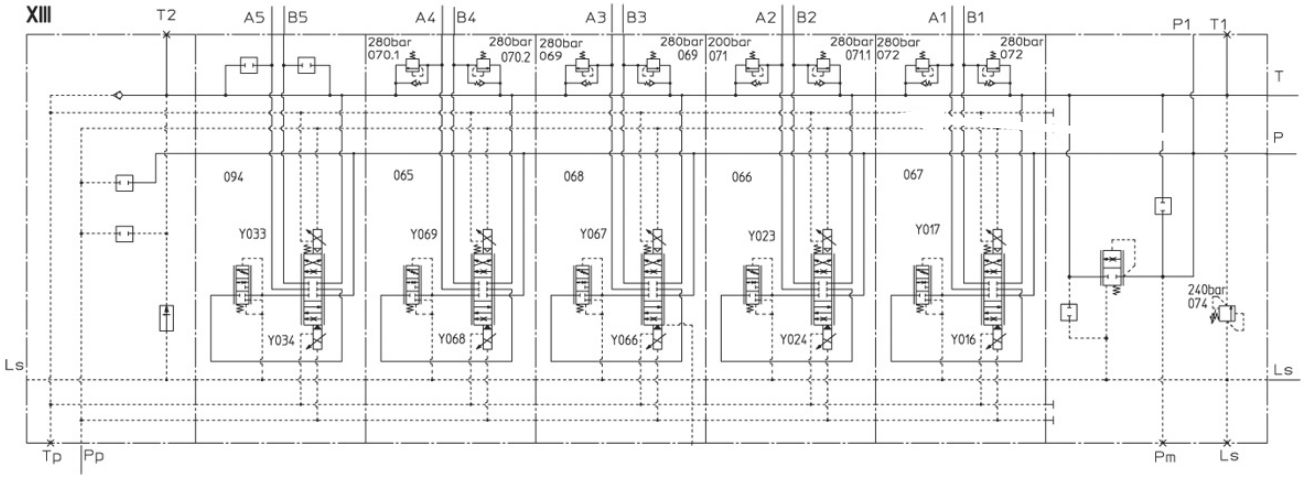

Hydraulic control unit XIII

Hydraulic control units **XIII** from 4 to 5 sections will be used. Section 5 does not have a secondary valve.

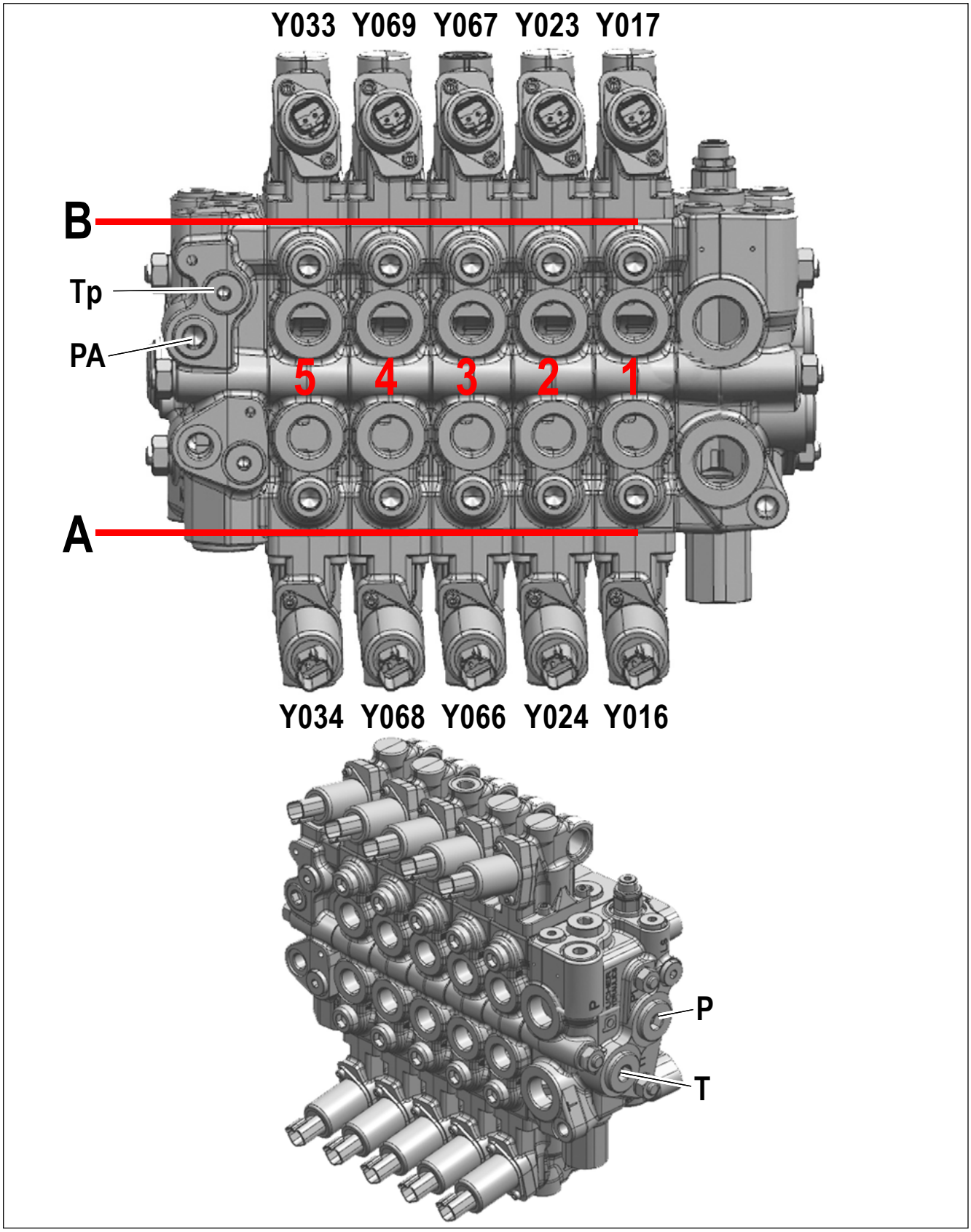

Description: control unit XIII

Pos.	Component	Remarks
A	Port designation on control valve XIII	Section 1–5 bottom side
B	Port designation on control valve XIII	Section 1–5 rod side
P	Work hydraulics pump I	36 ccm/U (2.196 in³)
PA	Pilot control (boost pressure)	Approx. 30 bar (435.10 psi)
T	Tank recirculation via the return filter	–
Tp	Tank venting for the pilot caps	–
Y016	Lock proportional valve (Section 1)	PWM 4.7 Ω
Y017	Unlock proportional valve (Section 1)	PWM 4.7 Ω
Y023	Retract proportional valve (Section 2)	PWM 4.7 Ω
Y024	Extend proportional valve (Section 2)	PWM 4.7 Ω
Y033	Proportional valve additional circuit (Section 5)	PWM 4.7 Ω
Y034	Proportional valve additional circuit (Section 5)	PWM 4.7 Ω
Y066	Raise proportional valve (Section 3)	PWM 4.7 Ω
Y067	Lower proportional valve (Section 3)	PWM 4.7 Ω
Y068	Tilt back proportional valve (Section 4)	PWM 4.7 Ω
Y069	Tip out proportional valve (Section 4)	PWM 4.7 Ω

Valves from hydraulic control unit XIII

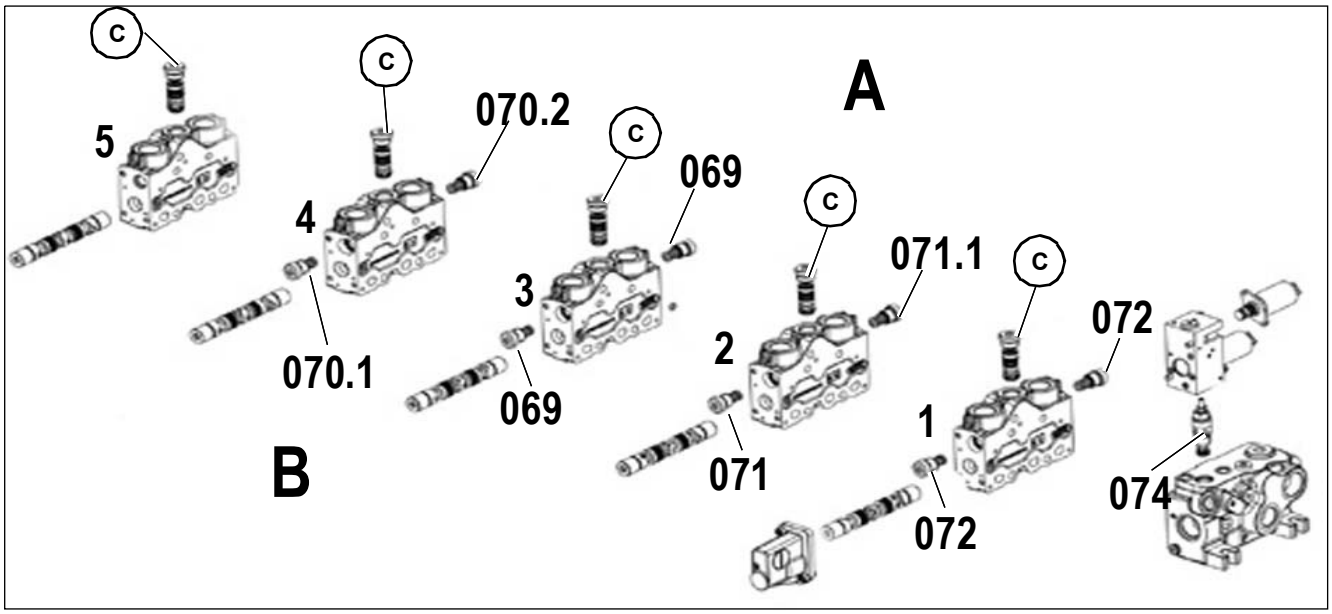

Description: control unit XIII

Pos.	Component	Remarks
1	3rd control circuit section 067	80 l/min (21.10 US gpm)
2	Push-out ram section 066	A2 – 100 l/min (26.4 US gpm) B2 – 80 l/min (21.10 US gpm)
3	Lift ram section 068	100 l/min (26.4 US gpm)
4	Tilt ram section 065	A4 – 100 l/min (26.4 US gpm) B4 – 80 l/min (21.10 US gpm)
5	Section rear additional control circuit Hitch/Tipper 094	80 l/min (21.10 US gpm)
A	Port designation on control valve XIII	Section 1–5 bottom side
B	Port designation on control valve XIII	Section 1–5 rod side
C	Pressure compensators	–
069	Secondary valve for raise lifting cylinder (B)	270–290 bar (3916–4206 psi)
069	Secondary valve for lower lifting cylinder (A)	270–290 bar (3916–4206 psi)
070.1	Secondary valve for tipping cylinder rod side fill shovel (A)	270–290 bar (3916–4206 psi)
070.2	Secondary valve for tipping cylinder bottom side empty shovel (B4)	270–290 bar (3916–4206 psi)
071	Secondary valve for push-out ram Extend bottom side (B)	190–210 bar (2755–3045 psi)
071.1	Secondary valve for push-out ram Retract rod side (A)	270–290 bar (3916–4206 psi)
072	Secondary valve 3rd control circuit, lock/unlock (A/B)	270–290 bar (3916–4206 psi)
074	LS pressure relief valve	240 bar (3480.91 psi)

Gear pump working hydraulics I

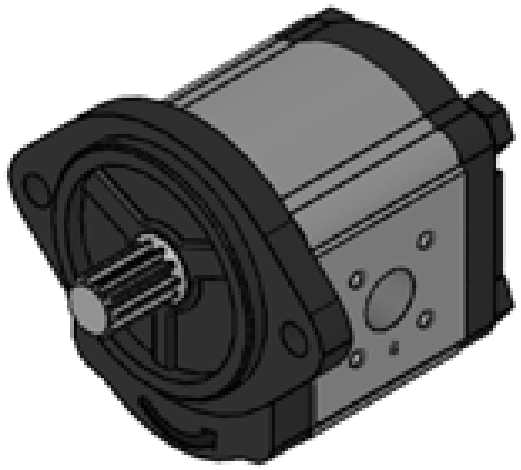

Component	Remarks	System pressure
I	36 ccm/U (2.196 in³)	230–250 bar (2320.6 – 2755.72 psi)

Function description

The gear pump for working hydraulics **I** supplies the steering orbitrol **IV** and the main control unit **XIII** with oil via the priority valve **008**. The oil flow is filtered by a high-pressure filter **167** directly after the gear pump **I**.

Priority valve 008

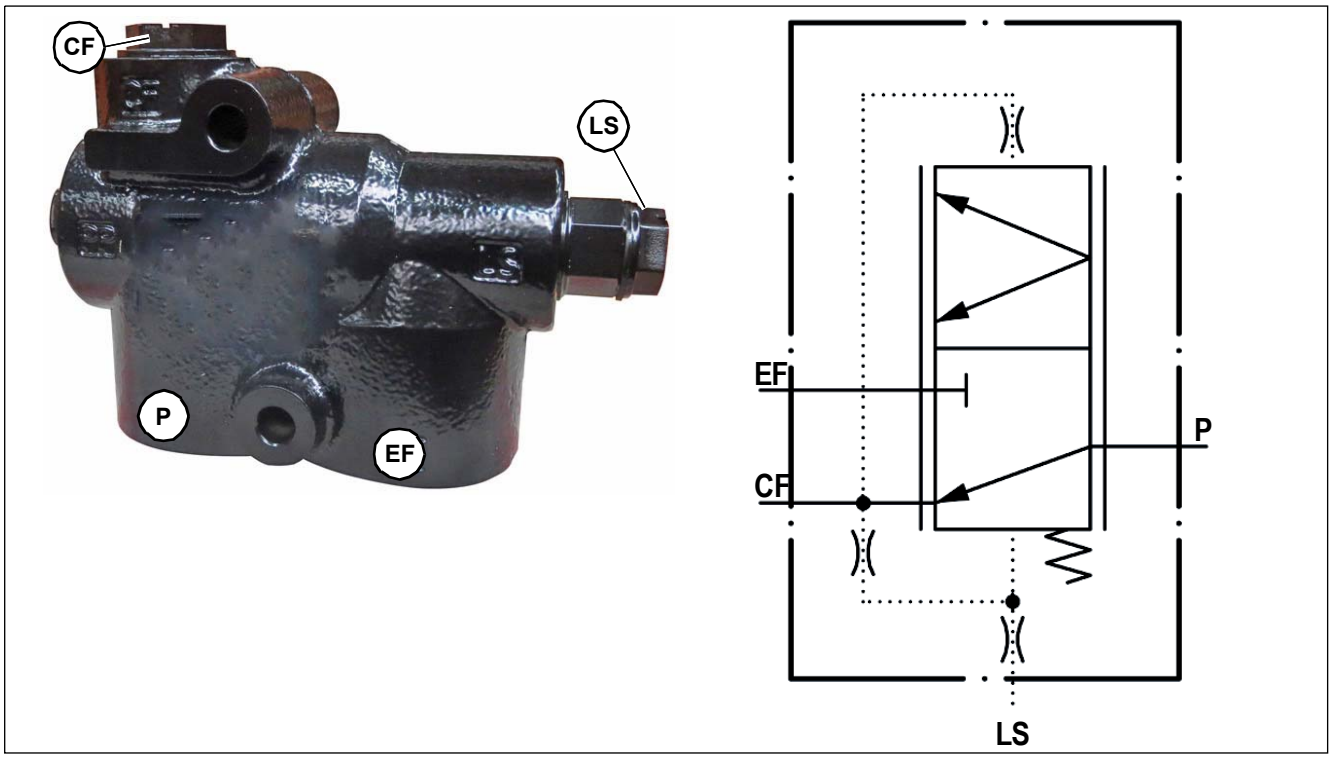

Connection	Power supply
P	Input from gear pump, working hydraulics **I**
LS	Input from steering orbitrol **IV**, port **LS**
CF	Output to steering orbitrol **IV**, port **P**
EF	Output to main control unit **XIII**, port **P1**

Function description

The priority valve **008** is responsible for dividing the oil flow from the gear pump work hydraulics **I into** the steering system and work hydraulics. Here, the oil is primarily supplied to the steering system **IV**.

Function

The oil flow coming from the gear pump **I** passes through port **P** and an internal duct of the priority valve **008** to the control spool. The control spool is then pushed against the spring via the area ratio and the oil flow is distributed evenly between the steering orbitrol **IV** and the main control unit **XIII**..

As soon as the steering orbitrol **IV** is actuated it generates an LS signal, which acts on the control spool of the priority valve **008**. Through the combination of the spring force and the LS signal the control spool is pushed back towards the initial position and the steering assumes priority. This can mean that functions of the working hydraulics are executed more slowly during steering.

Reversing valve, 4th service in the front 133 (Y051)

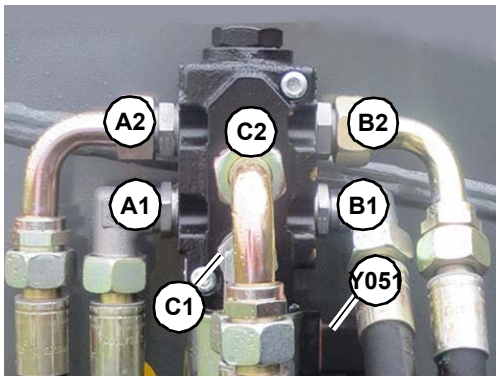

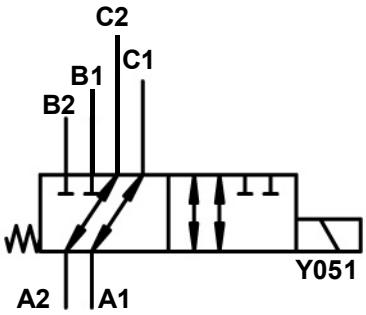

Connection	Power supply
A1	Input from section **B1**
A2	Input from section A1
B1	Output 4th service
B2	Output 4th service
C1	Output 3rd control circuit (unlock)
C2	Output 3rd control circuit (lock)

Component	Function	Remarks
Y051	Solenoid valve for changeover of front 4th control circuit (lock/unlock)	12 V

Function description

For controlling multiple consumers with one oil supply. As soon as voltage is supplied to solenoid valve **Y051** the 4th service can be used. If the solenoid valve**Y051** is dead**,** the oil flow is available to the third control circuit or the locking cylinder.

Relief valve 134 (Y106)

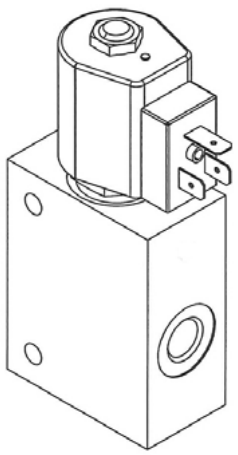

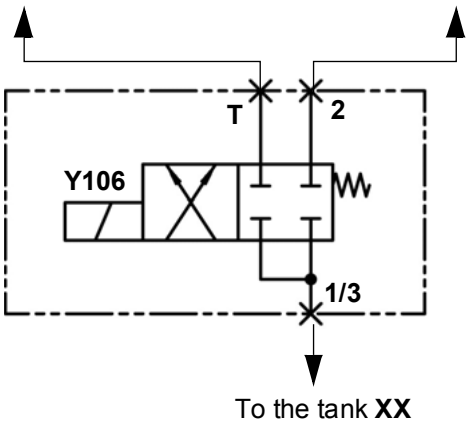

Connection	Power supply
T	Input from section A1
2	Input from section B1
1/3	Output to tank **XX**

Component	Function	Remarks
Y106	Solenoid valve (pressure relief)	12 V

Function description

With touch button **S127** on the telescopic arm, the pressure in the third control circuit is reduced via the relief valve **134** in order to be able to attach the quick hitch facility.

Joystick D002

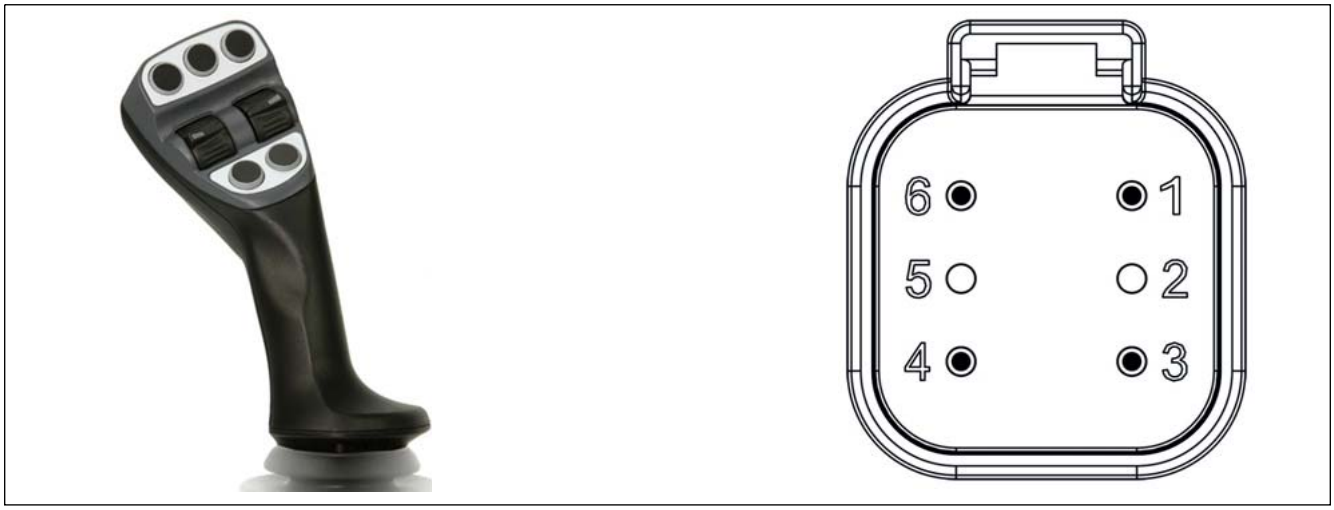

Pin assignment of Joystick D002

PIN	Component	Measuring range
1	Ground (KL31)	Cabin
2	Voltage supply F010/3 A (KL30)	12 V
3	Switched voltage supply F032/5 A (KL15)	12 V
4	–	–
5	CAN 1	low
6	CAN 1	high

Description of joystick D002 (version 1)

Functional characteristics of joystick (handle)

The joystick is used to operate the loader unit as well as various additional functions.

The loader unit can only be completely operated by the control lever if:

1. the seat contact switch is actuated (operator in the seat)
2. Starter ON
3. the diesel engine is on
4. Lock for long-haul travel **S085** off

Front side of joystick D002

Pos.	Component	Function
A	Tip switch **S066**	The drive is deactivated (neutral)
B	Roller **S034/035**	Forward/reverse travel
C	Tip switch **S135**	Reduce speed level e.g. from hare to turtle
D	Tip switch **S136**	Increase speed level e.g. from turtle to hare
E	Tip switch **S110**	Reversing valve (front telescopic arm)
F	Roller **S038/039**	Extend/retract telescopic arm
G	Tip switch **S092**	Bucket repositioning

Reverse of joystick D002

Pos.	Component	Function
H	Roller **S030/031**	Unlock/lock third control circuit
I	Tip switch **S025**	Differential lock (**Y009**)

Description of joystick D002 (version 2)

Functional characteristics of joystick (handle)

The joystick is used to operate the loader unit as well as various additional functions.

The loader unit can only be completely operated by the control lever if:

1. the seat contact switch is actuated (operator in the seat)
2. Starter ON
3. the diesel engine is on
4. Lock for long-haul travel **S085** off

Front side of joystick D002

Pos.	Component	Function
A	Tip switch **S109**	Operation of electric circuit 1 of the 7-pole Front power outlet
B	Roller **S034/035**	Forward/reverse drive and neutral
C	Tip switch **S135**	Reduce speed level e.g. from hare to turtle
D	Tip switch **S136**	Increase speed level e.g. from turtle to hare
E	Tip switch **S110**	Reversing valve (front telescopic arm)
F	Roller **S038/039**	Extend/retract telescopic arm
G	Tip switch **S092**	Bucket repositioning

Reverse of joystick D002

Pos.	Component	Function
H	Roller **S030/031**	Unlock/lock third control circuit
I	Tip switch **S025**	Differential lock (**Y009**)

Description of oil quantity adjustment N023

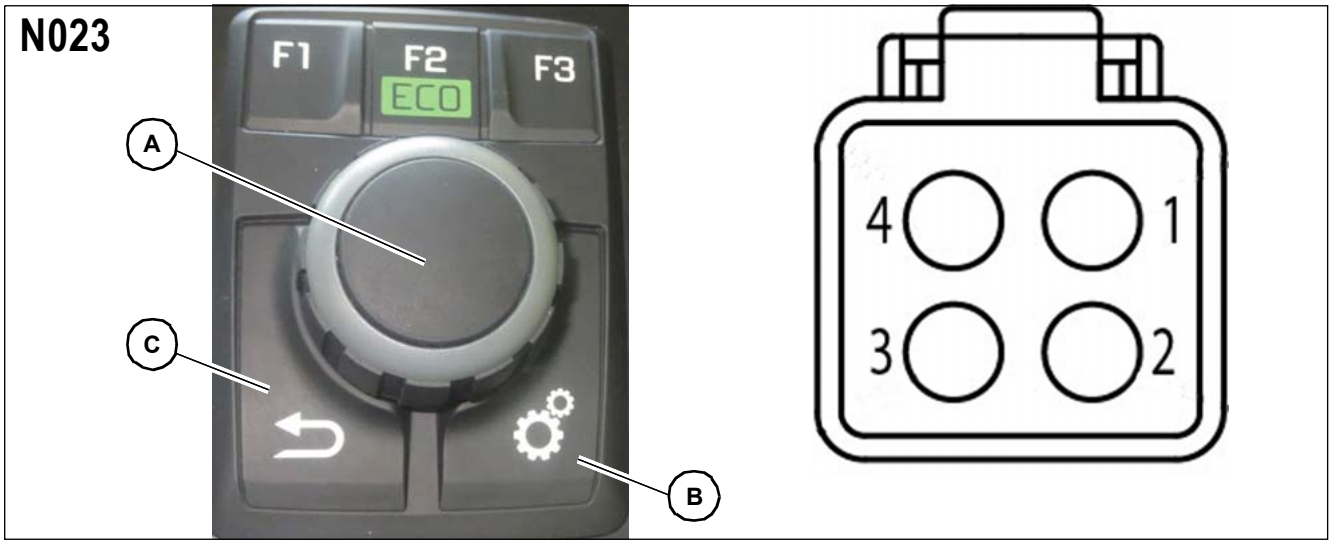

Pin assignment of oil quantity adjustment N023

PIN	Component	Measuring range
1	Voltage supply F032/5 A	12 V
2	Ground	Cabin
3	CAN 1	high
4	CAN 1	low

Function description

In order to be able to use the oil quantity adjustment, the ignition must be switched on, the seat must be occupied.

The CAN message is sent to the controller **N004/N015** Pin 2-10 (CAN1-LOW) and PIN 2-23 (CAN1-High).

Selection types

PIN	Component
F1	Touch button for locking/unlocking oil quantity adjustment **S030/031**
F2	Touch button for oil quantity adjustment of third control circuit **S033**
F3	Touch button for oil quantity adjustment of tipper **S070**, fourth additional control circuit in the rear **S069**
A	Rotary switch for modifying the value
B	Hold touch button for 3 s in order to access the menu for oil quantity adjustment
C	Touch button for cancel or return

Change quantity of oil

Turn rotary switch **A** to the right

➥ Value is increased

Turn rotary switch **A** to the left

➥ Value is decreased

Press rotary switch **A** in order to confirm the value

Touch button S033 – continuous function of third control circuit in the keypad D003

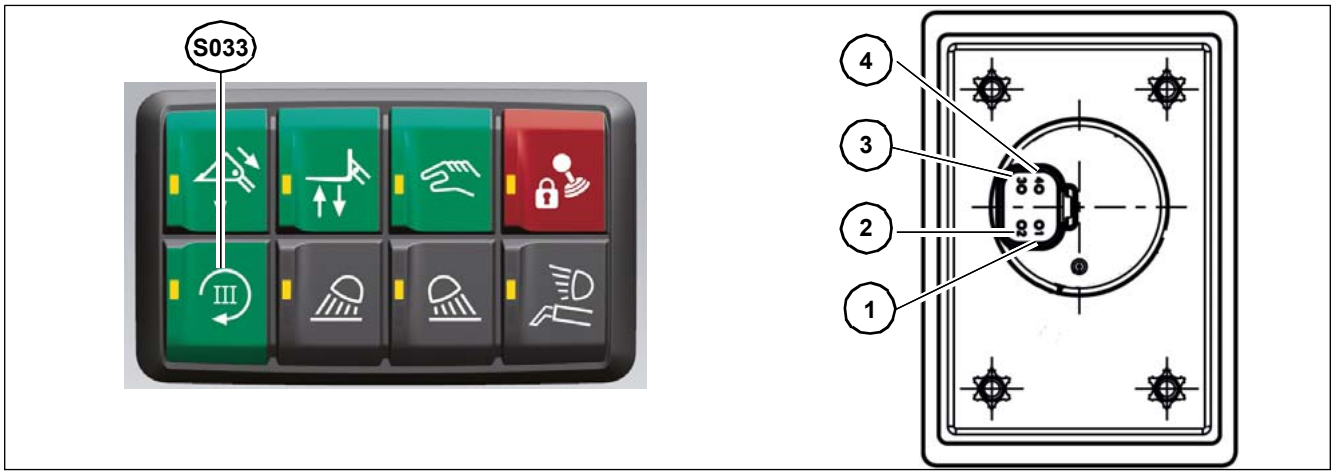

Pin assignment of keypad D003

PIN	Component	Measuring range
1	Voltage supply F032/5 A	12 V
2	Ground	Cabin
3	CAN 1	high
4	CAN 1	low

Function description

With the touch button **S033** continuous function of the third control circuit, the pre-set amount of oil will be made permanently available. The roller **S030/031** in the joystick **D002** is blocked. If the function is active, the touch button **S033** lights up.

Continuous function of third control circuit switched on

With the touch button **S033** on the keypad **D003**, a CAN message (CAN1) is sent to the controller **N004**. The controller **N004** PIN 1-54 energizes the proportional valve **Y016**.

Touch button S040 - quick hitch system lock

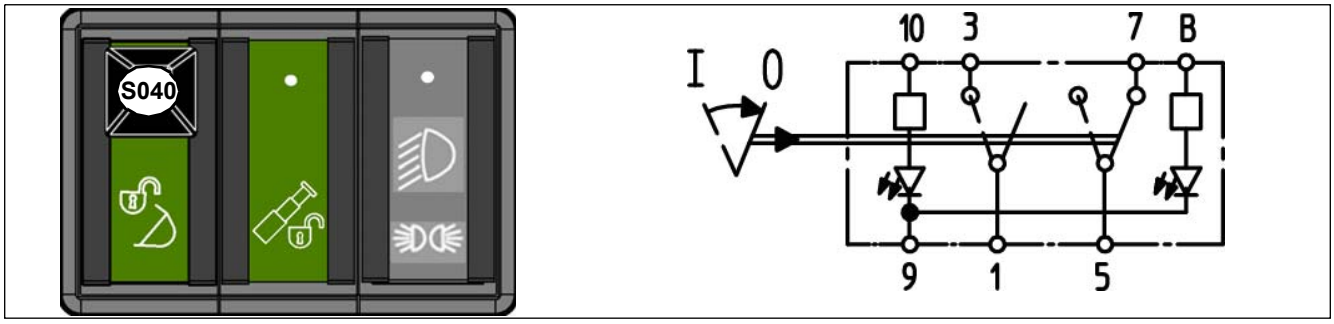

Touch button S040 quick coupling lock switched off 0

PIN	Component	Measuring range
1	Output to controller N004 XE15 (1-17)	0 V
3	Output from controller N004 XE04 (2-21)	5 V
5	Output to controller N004 XE15 (1-41)	5 V
7	Output from controller N004 XE04 (2-21)	5 V
9	Lighting ground (cab)	
10	Board voltage lighting F018/10 A	12 V
B	Lighting for control	0 V

Touch button S040 quick coupling lock switched on 1

PIN	Component	Measuring range
1	Output to controller N004 XE15 (1-17)	5 V
3	Output from controller N004 XE04 (2-21)	5 V
5	Output to controller N004 XE15 (1-41)	0 V
7	Input from controller N004 XE04 (2-21)	5 V
9	Lighting ground (cab)	
10	Board voltage lighting F018/10 A	12 V
B	Lighting for control	5 V

Function description

With the touch button **S040** quick coupler system lock, the functions quick coupler system unlock **Y025,** emergency lowering via lowering **Y067** and auto hitch lock **Y047** are controlled.

Touch button S085 – joystick shut-down for road travel (lock for long-haul travel) in the keypad D003

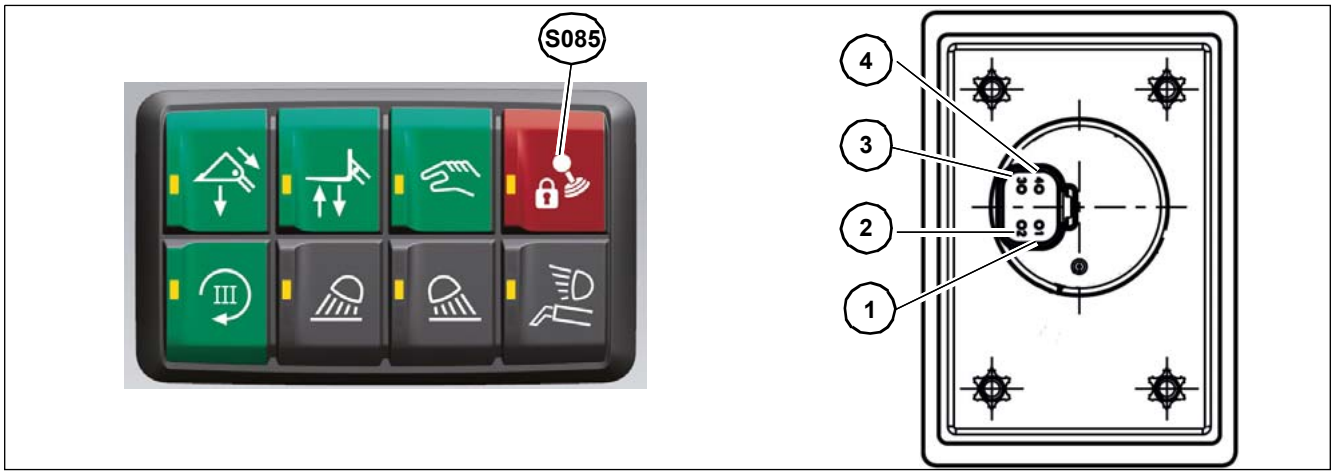

Pin assignment of keypad D003

PIN	Component	Measuring range
1	Voltage supply F032/5 A	12 V
2	Ground	Cabin
3	CAN 1	high
4	CAN 1	low

Function description

When the road travel lock function switch **S085** is switched to road travel lock ON, no hydraulic functions can be actuated. If the function is active, the touch button **S085** lights up.

Joystick shut-down switched on

With the touch button **S085** on the keypad **D003** a CAN message (CAN1) is sent to controller **N004**. The controller **N004** deactivates all outputs to the proportional valves on the control unit.

Operator presence switch S104

The seat contact switch **S104** is composed of two switches that have been put into a single casing.

Driver not seated on the seat

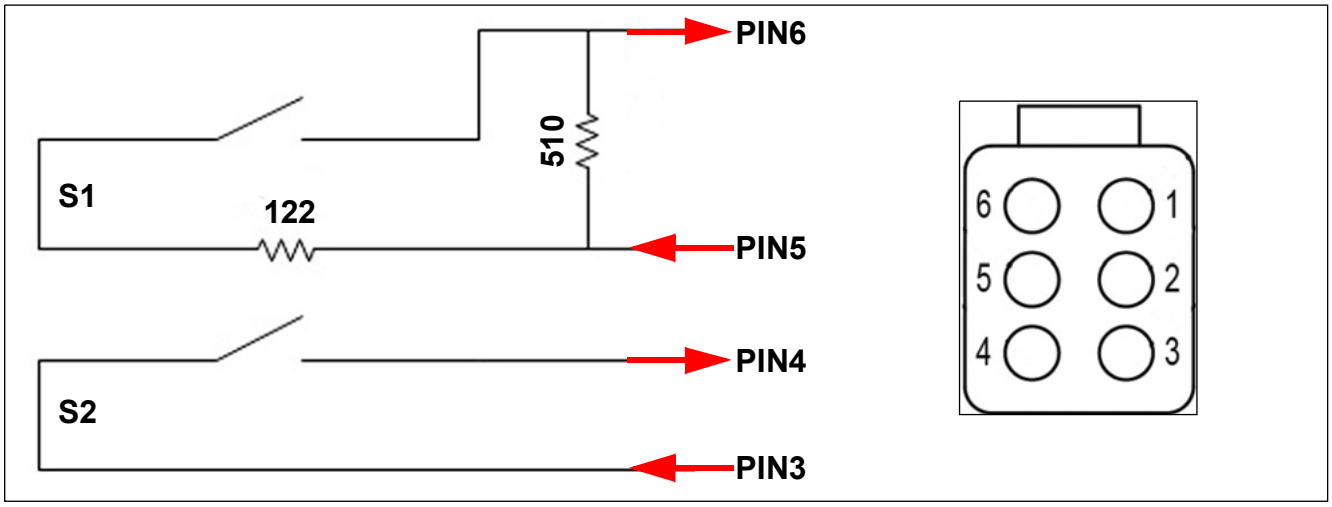

PIN	Component	To PIN	Measuring range
1	Board voltage F038/25A (for air cushioned seat option)	–	12 V
2	Ground	Cabin	Ground
3	On-board voltage F014/5A	–	12 V
4	Signal to the controller N004	XE15 (1-39)	0 V
5	Output from controller N004	XE15 (1-04)	12 V
6	Signal to the controller N004	XE04 (2-44)	2 – 3 V

Operator not on seat when the function starts

Seat contact switch open

- Diesel engine cannot be started.
- The travel direction cannot be selected.

The following proportional valves are not energized.

1. Raising **Y066,** lowering **Y067** of telescopic arm
2. Fill shovel **Y068,** Empty shovel **Y069**
3. Retraction **Y023,** extension **Y024** of telescopic arm
4. Locking **Y016,** unlocking **Y017**
5. Solenoid valve for quickhitch lock **Y025**

Upper/lower rear additional control circuit

1. Raising **Y044** or lowering **Y045** tipper or raising **Y044** or lowering **Y045** auto hitch
2. Auto hitch tipper switch-over **Y046**
3. Unlock auto hitch **Y047**

Operator not in seat during active function

The following valves remain energized, even when the operator leaves the seat during the activated function.

Upper/lower rear additional control circuit

1. Raising **Y044** or lowering **Y045** tipper or raising **Y044** or lowering **Y045** auto hitch
2. Auto hitch tipper switch-over **Y046**
3. Locking permanent function of third control circuit **Y016**
4. Solenoid valve for changeover of front 4th control circuit **Y051**
5. PTO solenoid valve **Y120**
6. Rear hitch solenoid valves **Y117**, **Y118**, **Y129**

If the operator leaves the seat for longer than 3 s, the following functions will be stopped.

1. Retraction **Y023,** extension **Y024** of telescopic arm
2. Raising **Y066,** lowering **Y067** of telescopic arm
3. Fill shovel **Y068,** Empty shovel **Y069**
4. Locking **Y016,** unlocking **Y017**
5. If the lowering function**Y067** is still active after 3 s, the lowering speed is throttled in relation to the driving speed until the standstill of the lowering movement.
6. Below a speed of 7 km/h (4.3 mph), the drive is switched into neutral if the operator leaves the seat for more than 5 s.
7. If the driving speed is below 0.5 km/h (0.3 mph), after 1 s, it will be switched to neutral and a warning tone will sound.
8. A warning signal sounds at speeds over 7 km/h (4.3 mph)

Driver seated on the seat

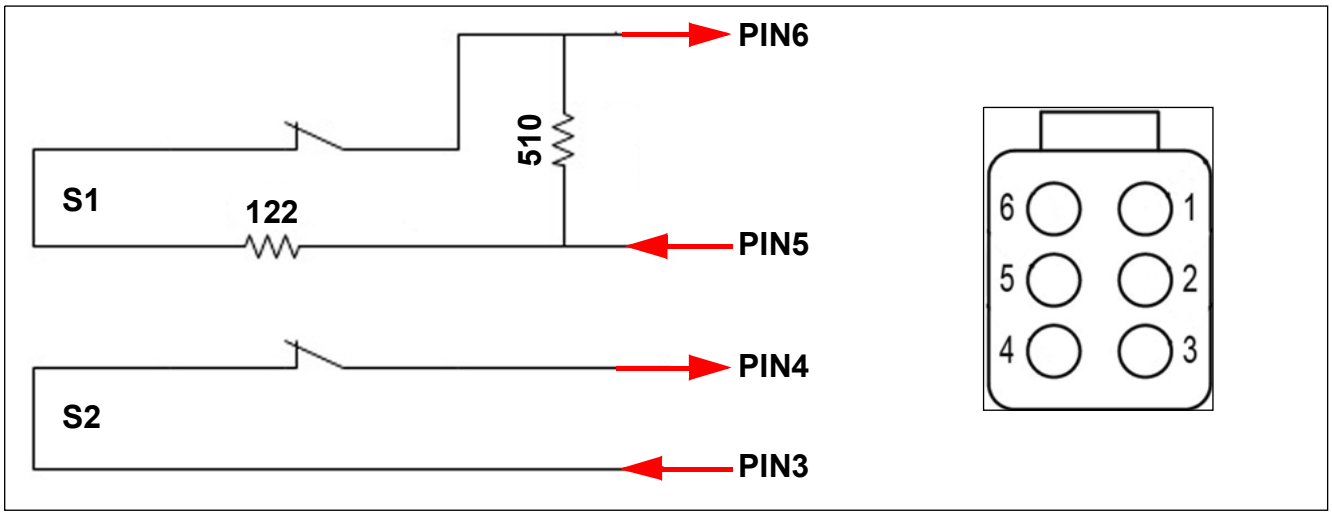

PIN	Component	To PIN	Measuring range
1	Board voltage F038/25A (for air cushioned seat option)	–	12 V
2	Ground	Cabin	Ground
3	On-board voltage F014/5A	–	12 V
4	Signal to the controller N004	XE15 (1-39)	12 V
5	Output from controller N004	XE15 (1-04)	12 V
6	Signal to the controller N004	XE04 (2-44)	5 – 7 V

If a voltage of 5–7 V is applied to plug XE15 (1-04) and a voltage of 12 V to plug XE15 (1-39), the operator is in the operator's seat.

Seat contact switch closed

The vehicle can be used to its full extent

Machine runs without the driver on the seat

➥ The valves for the additional control circuits continue to be energised but have to be switched on before (operator on the seat)

If the operator leaves the seat for longer than 3 s, the following functions will be stopped.

1. Retraction **Y023,** extension **Y024** of telescopic arm
2. Raising **Y066,** lowering **Y067** of telescopic arm
3. Fill shovel **Y068,** Empty shovel **Y069**
4. Locking **Y016,** unlocking **Y017**
5. If the lowering function**Y067** is still active after 3 s, the lowering speed is throttled in relation to the driving speed until the standstill of the lowering movement.
6. Below a speed of 7 km/h (4.3 mph), the drive is switched into neutral if the operator leaves the seat for more than 5 s.
7. If the driving speed is below 0.5 km/h (0.3 mph), after 1 s, it will be switched to neutral and a warning tone will sound.
8. A warning signal sounds at speeds over 7 km/h (4.3 mph)

Belt contact switch S123 (option)

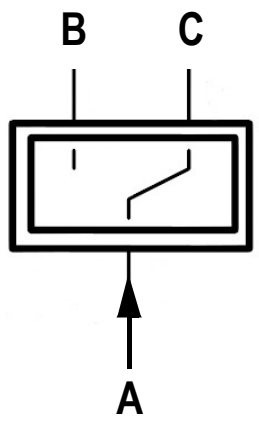

PIN	Component	KCN (PIN)	Measuring range	
			buckled in	Not buckled in
A	On-board voltage F014/5A	–	12 V	12 V
B	Input to controller N004	XE15 (1-15)	10 V	0 V
C	Output to switching relay K110	K110 (86)	0 V	12 V

Seat belt not fastened

- Diesel engine cannot be started.
- The travel direction cannot be selected.

The following proportional valves are not energized.

1. Raising **Y066,** lowering **Y067** of telescopic arm
2. Fill shovel **Y068,** Empty shovel **Y069**
3. Retraction **Y023,** extension **Y024** of telescopic arm
4. Locking **Y016,** unlocking **Y017**
5. Solenoid valve for quickhitch lock **Y025**

Upper/lower rear additional control circuit

1. Raising **Y044** or lowering **Y045** tipper or raising **Y044** or lowering **Y045** auto hitch
2. Auto hitch tipper switch-over **Y046**

- Unlock auto hitch **Y047**

Switch S127 (touch button) - pressure relief

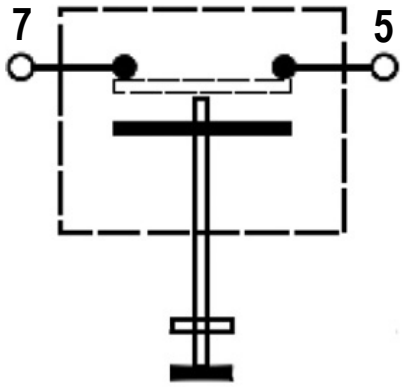

Switch S127 (tip switch) pressure relief not pressed

PIN	Component	PIN	Measuring range
5	On-board voltage F082	X402 (6)	12 V
7	Output to solenoid valve Y106	XR05 (4)	0 V

Switch S127 (tip switch) pressure relief pressed

PIN	Component	PIN	Measuring range
5	On-board voltage F082	X402 (6)	12 V
7	Output to solenoid valve Y106	XR05 (4)	12 V

Function description

Pressure relief is required in order to relieve the pressure in the 3rd control circuit so that the hydraulic lines can be connected or disconnected.

Electric control

If button **S127** is pressed, voltage is supplied to solenoid valve **Y106**.

8.10 Control of tipper and rear additional control circuit

Overview: control of tipper and rear additional control circuit

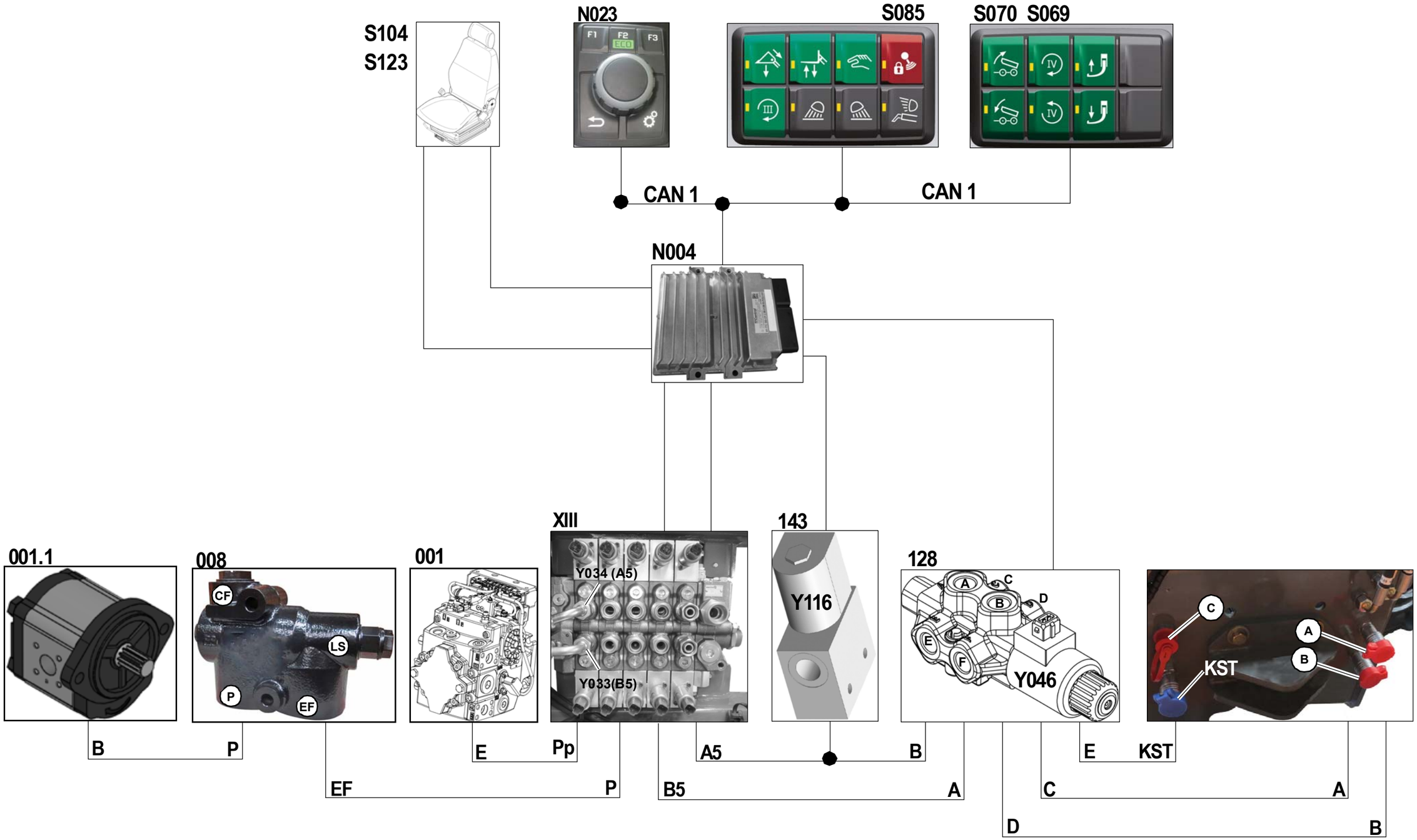

Description of tipper and rear additional control circuit

Hydraulic components

Pos.	Component	Remarks
XIII	Main control unit (hydraulics)	HDS24
001	Boost pump	12 ccm/U (0.732 in³)
001.1	Constant pump work hydraulics	36 ccm/U (2.196 in³)
008	Priority valve	–
133	Switch-over of rear additional control circuit	–
143	Multiple way valve (de-pressurized circuit)	–
KST	Tipping trailer connection	80 l/min
A	Connection of rear additional control (above)	80 l/min
B	Connection of rear additional control (below)	80 l/min
C	Hydraulic trailer brake connection	–

Electrical components

N004	Controller	HY-TTC 580-CP
N023	Oil volume setting	CAN 1
S069	Additional control circuit touch button	CAN 1
S070	Switch for raising/lowering the tipping trailer	CAN 1
S085	Joystick cut-off	CAN 1
S104	Operator presence switch	–
S123	Seat belt contact switch	–
Y033	Additional control circuit proportional valve (raise tipper)	4,7 Ω
Y034	Additional control circuit proportional valve (lower tipper)	4,7 Ω
Y046	Switch-over of rear additional control circuit solenoid valve	12 V
Y116	Only lower tipper solenoid valve in connection with auto hitch	12 V

Pos.	Component	Designation
CAN1	CAN1 – Work hydraulics	–
CAN0	CAN0 – Drive	–

Hydraulic control unit XIII

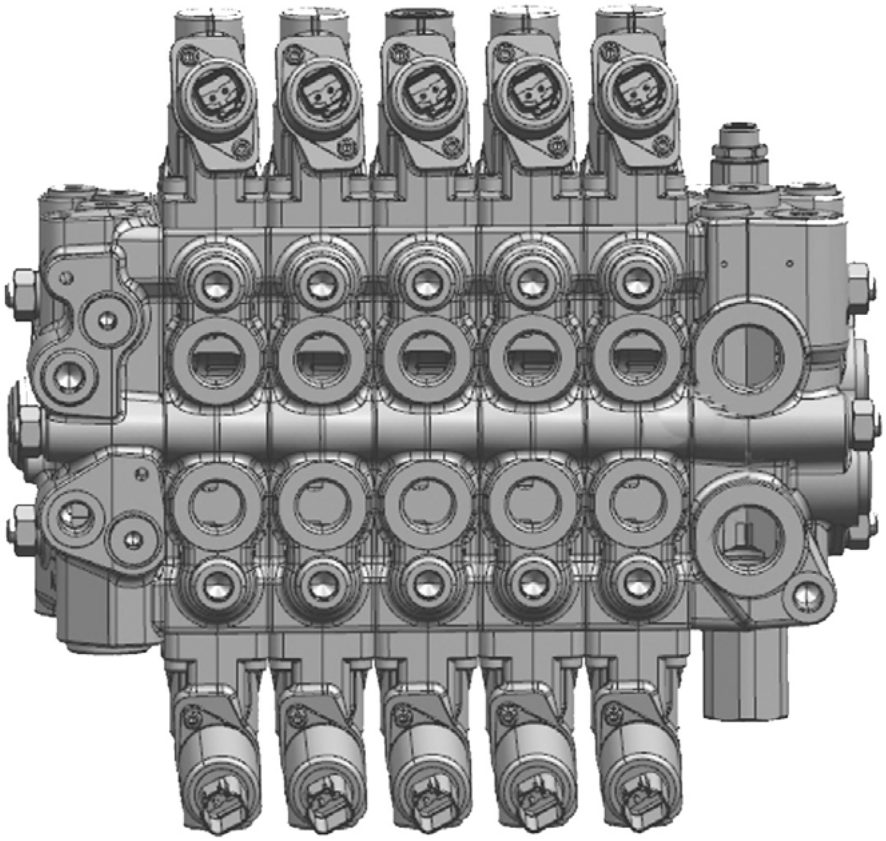

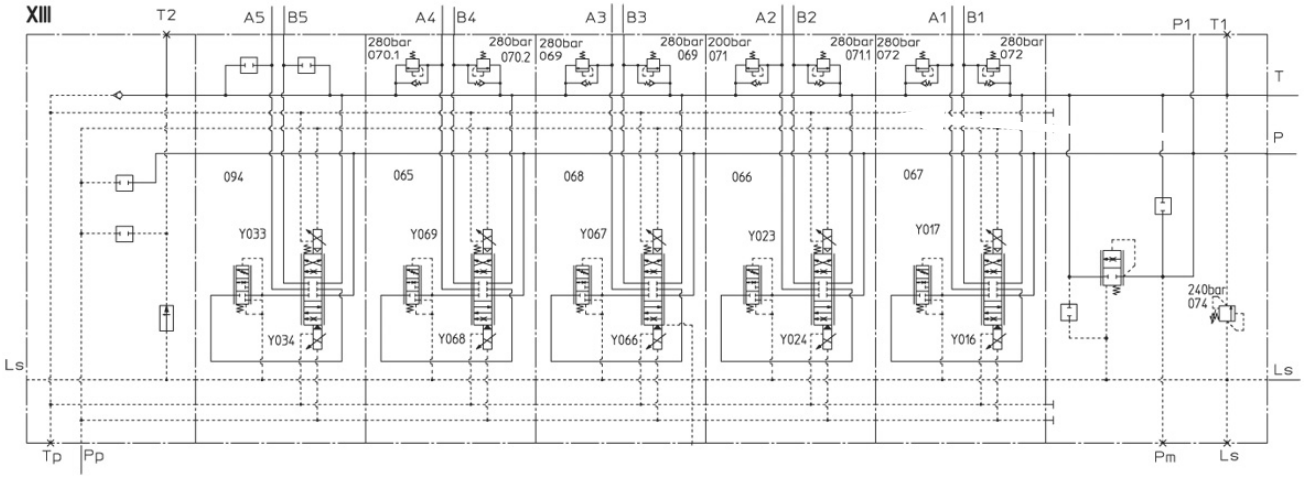

Hydraulic control unit XIII

Hydraulic control units **XIII** from 4 to 5 sections will be used. Section 5 does not have a secondary valve.

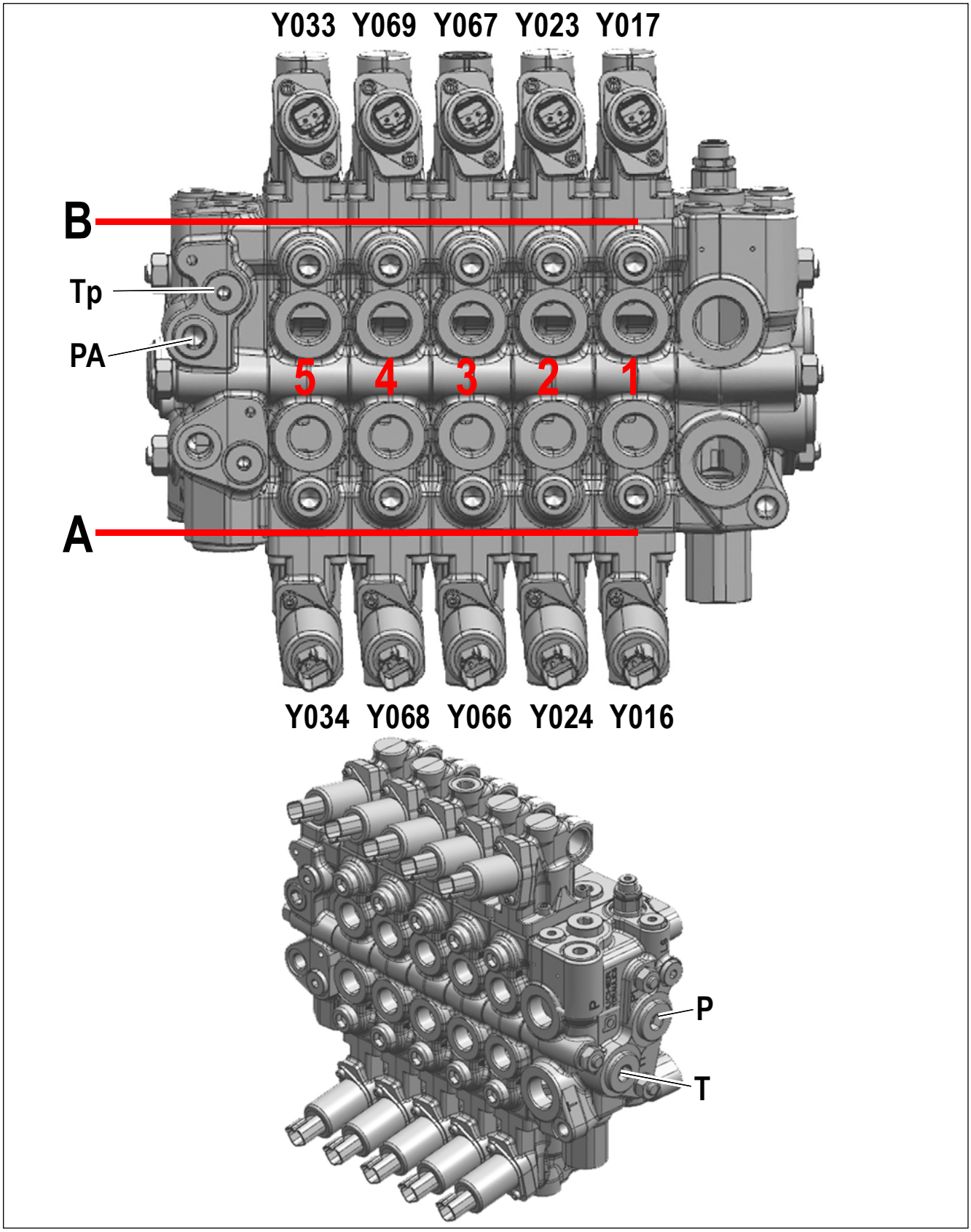

Description: control unit XIII

Pos.	Component	Remarks
A	Port designation on control valve XIII	Section 1–5 bottom side
B	Port designation on control valve XIII	Section 1–5 rod side
P	Work hydraulics pump I	36 ccm/U (2.196 in³)
PA	Pilot control (boost pressure)	Approx. 30 bar (435.10 psi)
T	Tank recirculation via the return filter	–
Tp	Tank venting for the pilot caps	–
Y016	Lock proportional valve (Section 1)	PWM 4.7 Ω
Y017	Unlock proportional valve (Section 1)	PWM 4.7 Ω
Y023	Retract proportional valve (Section 2)	PWM 4.7 Ω
Y024	Extend proportional valve (Section 2)	PWM 4.7 Ω
Y033	Proportional valve additional circuit (Section 5)	PWM 4.7 Ω
Y034	Proportional valve additional circuit (Section 5)	PWM 4.7 Ω
Y066	Raise proportional valve (Section 3)	PWM 4.7 Ω
Y067	Lower proportional valve (Section 3)	PWM 4.7 Ω
Y068	Tilt back proportional valve (Section 4)	PWM 4.7 Ω
Y069	Tip out proportional valve (Section 4)	PWM 4.7 Ω

Valves from hydraulic control unit XIII

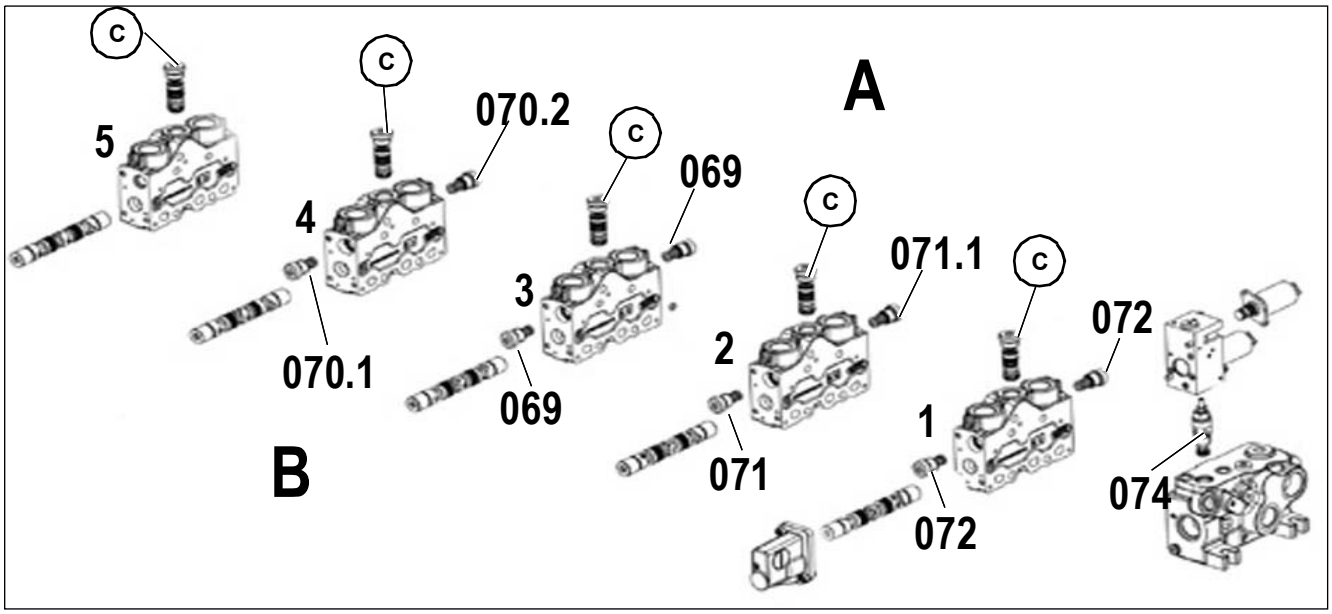

Description: control unit XIII

Pos.	Component	Remarks
1	3rd control circuit section 067	80 l/min (21.10 US gpm)
2	Push-out ram section 066	A2 – 100 l/min (26.4 US gpm) B2 – 80 l/min (21.10 US gpm)
3	Lift ram section 068	100 l/min (26.4 US gpm)
4	Tilt ram section 065	A4 – 100 l/min (26.4 US gpm) B4 – 80 l/min (21.10 US gpm)
5	Section rear additional control circuit Hitch/Tipper 094	80 l/min (21.10 US gpm)
A	Port designation on control valve XIII	Section 1–5 bottom side
B	Port designation on control valve XIII	Section 1–5 rod side
C	Pressure compensators	–
069	Secondary valve for raise lifting cylinder (B)	270–290 bar (3916–4206 psi)
069	Secondary valve for lower lifting cylinder (A)	270–290 bar (3916–4206 psi)
070.1	Secondary valve for tipping cylinder rod side fill shovel (A)	270–290 bar (3916–4206 psi)
070.2	Secondary valve for tipping cylinder bottom side empty shovel (B4)	270–290 bar (3916–4206 psi)
071	Secondary valve for push-out ram Extend bottom side (B)	190–210 bar (2755–3045 psi)
071.1	Secondary valve for push-out ram Retract rod side (A)	270–290 bar (3916–4206 psi)
072	Secondary valve 3rd control circuit, lock/unlock (A/B)	270–290 bar (3916–4206 psi)
074	LS pressure relief valve	240 bar (3480.91 psi)

Gear pump working hydraulics I

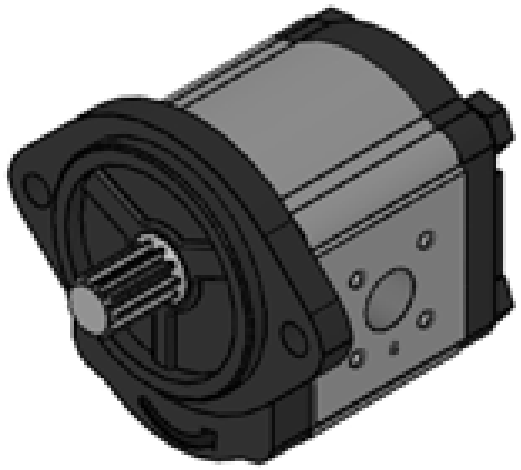

Component	Remarks	System pressure
I	36 ccm/U (2.196 in³)	230–250 bar (2320.6 – 2755.72 psi)

Function description

The gear pump for working hydraulics **I** supplies the steering orbitrol **IV** and the main control unit **XIII** with oil via the priority valve **008**. The oil flow is filtered by a high-pressure filter **167**directly after the gear pump **I**.

Priority valve 008

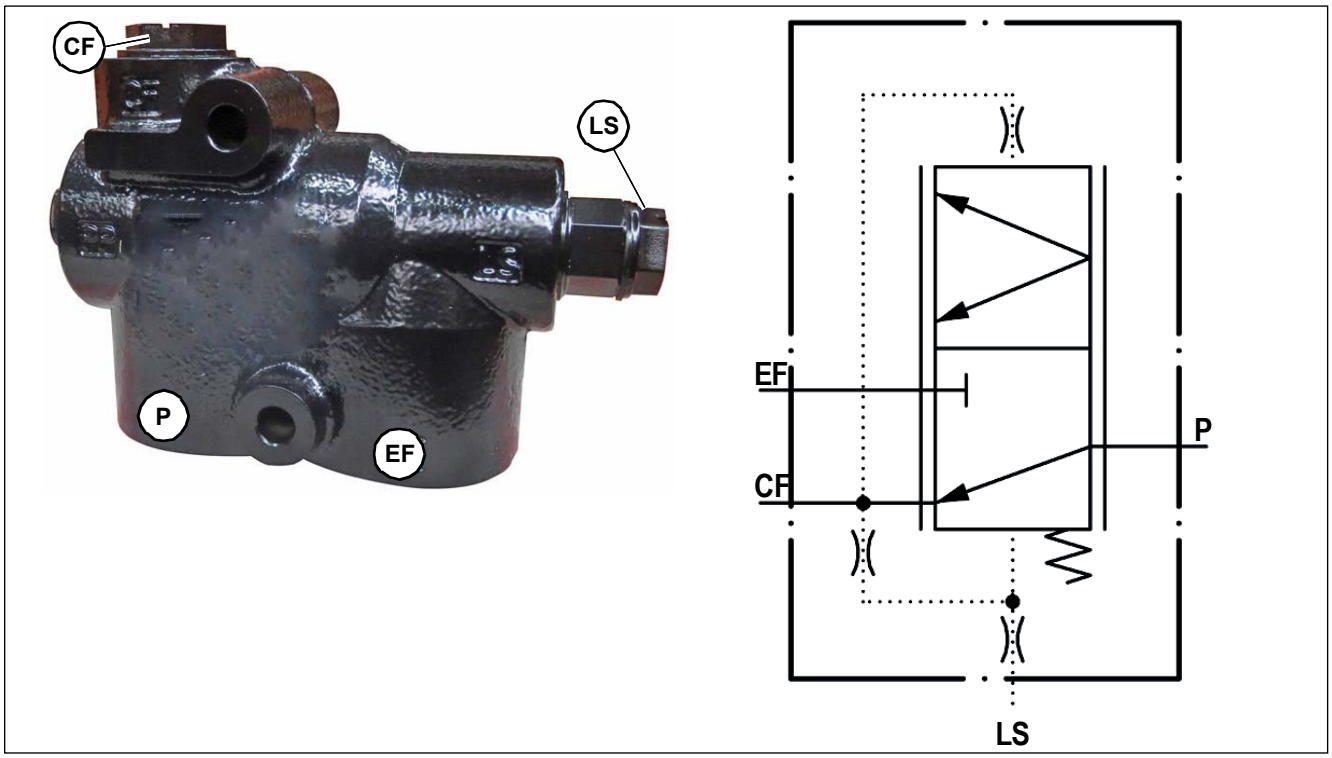

Connection	Power supply
P	Input from gear pump, working hydraulics **I**
LS	Input from steering orbitrol **IV**, port **LS**
CF	Output to steering orbitrol **IV**, port **P**
EF	Output to main control unit **XIII**, port **P1**

Function description

The priority valve **008** is responsible for dividing the oil flow from the gear pump work hydraulics **I into** the steering system and work hydraulics. Here, the oil is primarily supplied to the steering system **IV**.

Function

The oil flow coming from the gear pump **I** passes through port **P** and an internal duct of the priority valve **008** to the control spool. The control spool is then pushed against the spring via the area ratio and the oil flow is distributed evenly between the steering orbitrol **IV** and the main control unit **XIII**..

As soon as the steering orbitrol **IV** is actuated it generates an LS signal, which acts on the control spool of the priority valve **008**. Through the combination of the spring force and the LS signal the control spool is pushed back towards the initial position and the steering assumes priority. This can mean that functions of the working hydraulics are executed more slowly during steering.

Reversing valve of rear additional control circuit 128 (Y046)

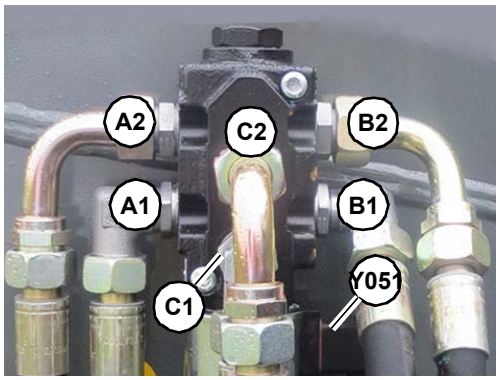

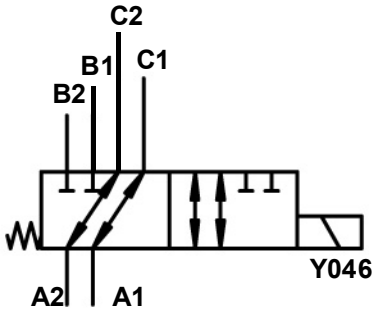

Connection	Power supply
A1	Input from section **B5**
A2	Input from section A5
B1	Output 4th service
B2	Output 4th service
C1	Output raise tipper or auto hitch
C2	Output lower tipper or auto hitch

Component	Function	Remarks
Y046	Solenoid valve switch over fourth service rear for additional control circuit rear, tipper and auto hitch	12 V

Function description

The reversing valve is used to control various users with one oil supply. If the solenoid valve **Y046** is not energized, the fourth double action service can be used. If the reversing valve is energized, either the tipper or auto hitch is possible. When using the auto hitch, the solenoid valve **Y116** will be energized simultaneously in order to drain the bottom side of the auto hitch against the tank.

Relief valve for lower tipper 143 (Y116)

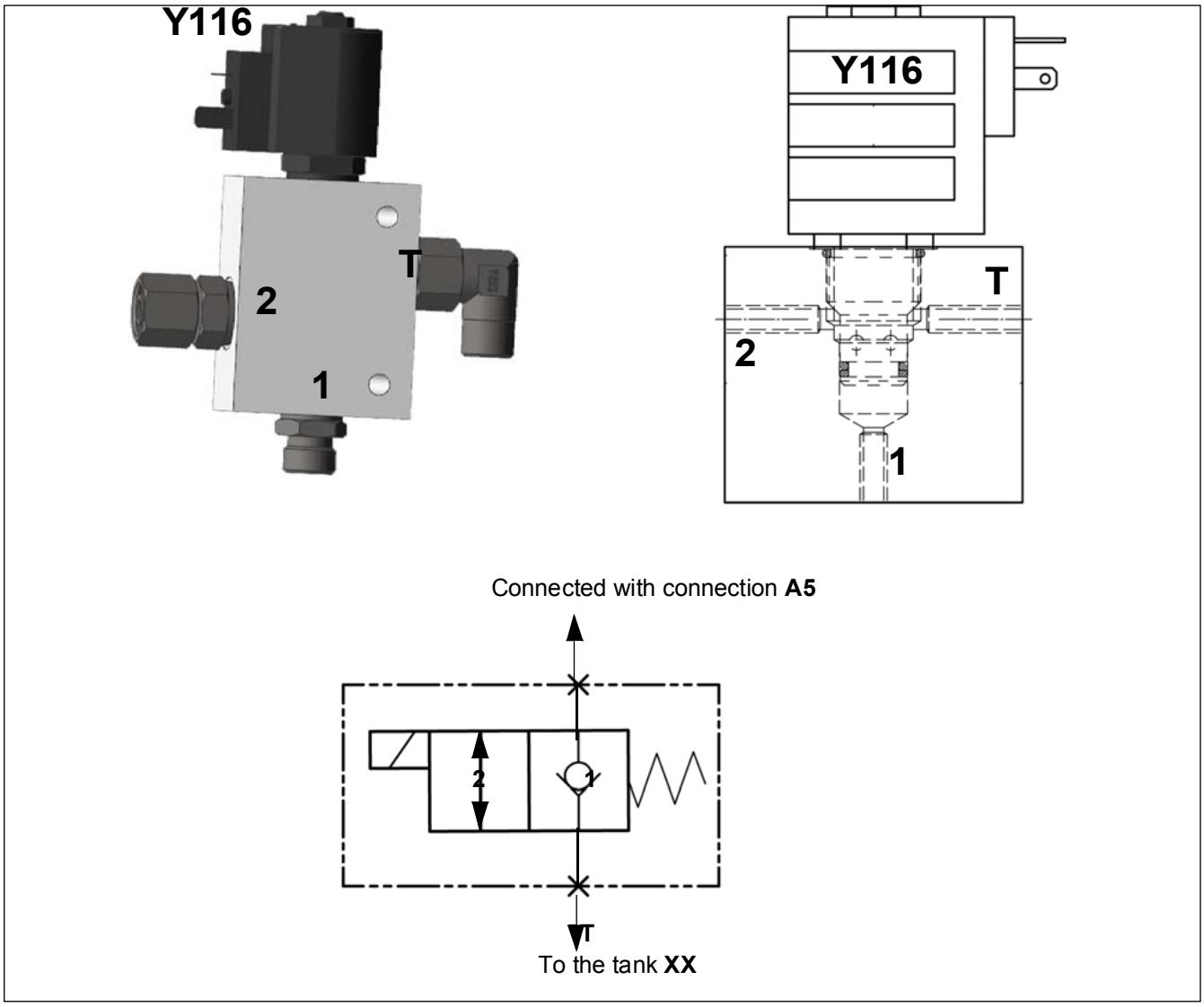

Connection	Power supply
1	From the hydraulic control unit **XIII** (bottom side A5)
2	Lower tipper solenoid valve **Y116** energized with the auto hitch (bottom side) connected
T	Connection to the tank
Y116	Solenoid valve for lowering tipper **Y116**

Function description

Solenoid valve **Y116** is energized with circuit breaker **S070** (lower tipper). In order to obtain circulation from the hydraulic control unit **XII** connection A5 to the tank. In other words, from hydraulic control unit **XII** connection **B5** is used to lower the tipper.

The solenoid valve **Y116** is only required in connection with the auto hitch.

Description of oil quantity adjustment N023

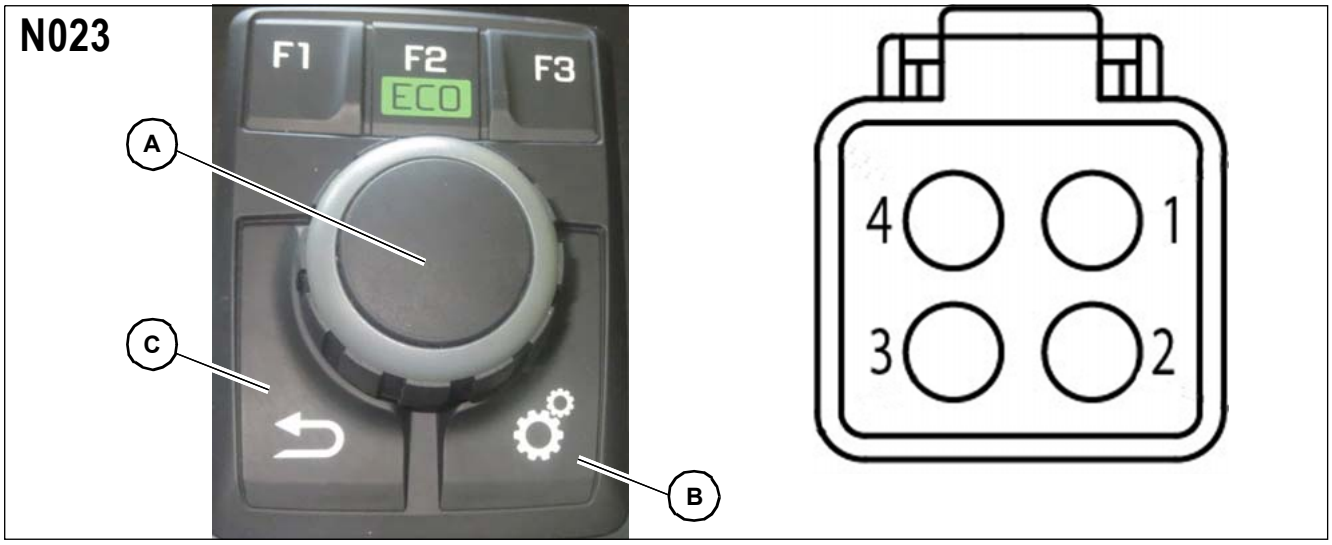

Pin assignment of oil quantity adjustment N023

PIN	Component	Measuring range
1	Voltage supply F032/5 A	12 V
2	Ground	Cabin
3	CAN 1	high
4	CAN 1	low

Function description

In order to be able to use the oil quantity adjustment, the ignition must be switched on, the seat must be occupied.

The CAN message is sent to controller **N004** Pin 2-10 (CAN1-LOW) and PIN 2-23 (CAN1-High).

Selection types

PIN	Component
F1	Touch button for locking/unlocking oil quantity adjustment **S030/031**
F2	Touch button for oil quantity adjustment of third control circuit **S033**
F3	Touch button for oil quantity adjustment of tipper **S070**, fourth additional control circuit in the rear **S069**
A	Rotary switch for modifying the value
B	Hold touch button for 3 s in order to access the menu for oil quantity adjustment
C	Touch button for cancel or return

Change quantity of oil

Turn rotary switch **A** to the right

➥ Value is increased

Turn rotary switch **A** to the left

➥ Value is decreased

Press rotary switch **A** in order to confirm the value

Touch button S069 – rear additional control circuit, in the keypad D005

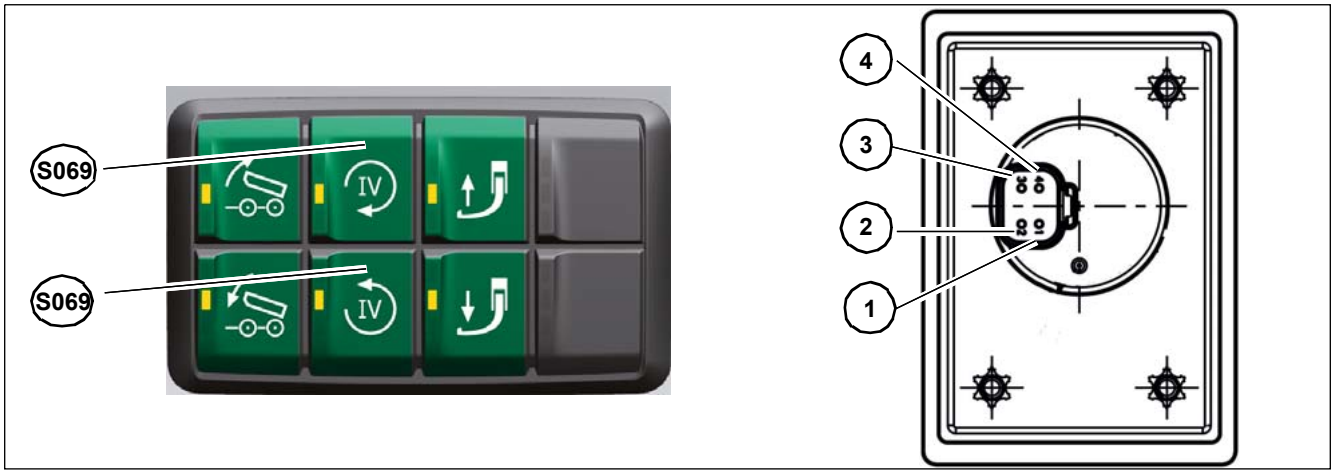

Pin assignment of keypad D005

PIN	Component	Measuring range
1	Voltage supply F032/5 A	12 V
2	Ground	Cabin
3	CAN 1	high
4	CAN 1	low

Function description

With the additional control circuit touch button **S069**, the pre-set amount of oil (20%) is available to the rear additional circuit. The oil quantity can be changed via the oil quantity adjustment **N023**. If the function is active, the touch button **S069** lights up.

Additional control circuit (double action)

With the touch button **S069** on the keypad **D005** a CAN message (CAN1) is sent to controller **N004**. From the controller **N004**, the reversing valve **Y046** is energized. The oil flow from section 5 on the hydraulic control unit **XIII** (proportional valve **Y033**/**034**) is released via the reversing valve **Y046** on the rear additional control circuit.

The PIN 1-83 outlet on the controller **N004** energizes the proportional valve **Y033** (2).

The PIN 1-86 outlet on the controller **N004** energizes the proportional valve **Y034** (2).

The PIN 1-59 outlet on the controller **N004** energizes the solenoid valve **Y046** (2).

Touch button S070 – tipper in the keypad D005

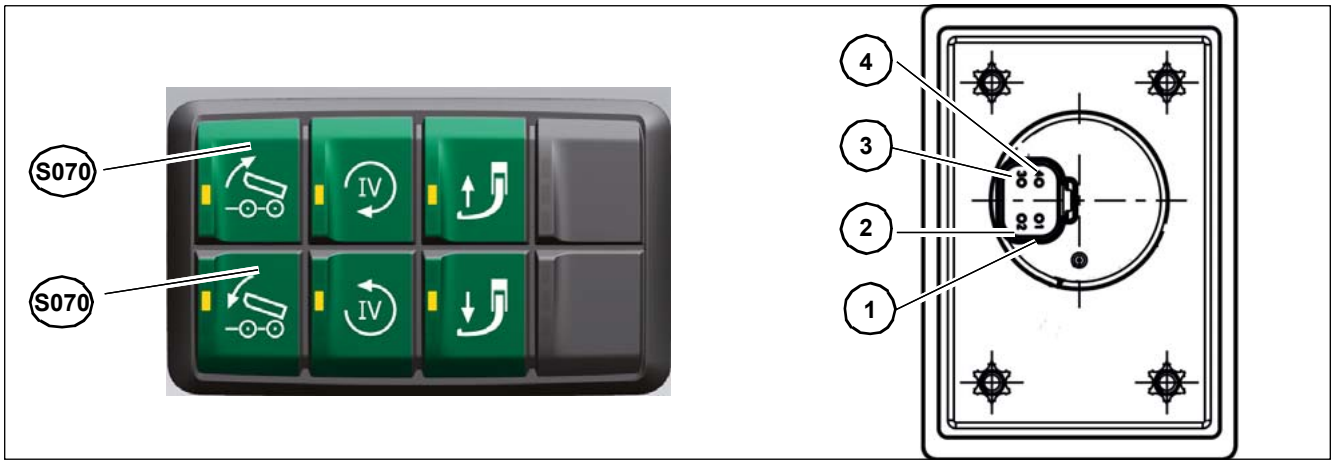

Pin assignment of keypad D005

PIN	Component	Measuring range
1	Voltage supply F032/5 A	12 V
2	Ground	Cabin
3	CAN 1	high
4	CAN 1	low

Function description

With the additional control circuit touch button **S070**, the pre-set amount of oil (20%) is available to the rear tipper. The oil quantity can be changed via the oil quantity adjustment **N023**. The raise tipper function is active up to a speed of 16 km/h. From 17 km/h, the raise tipper function is locked. In connection with an auto hitch, the solenoid valve **Y116** is also energized. If the function is active, the touch button **S070** lights up.

Raise tipping trailer

With the touch button **S070** on the keypad **D005** a CAN message (CAN1) is sent to controller **N004**. From the controller **N004**, the proportional valve **Y033** is energized. The oil flow from section 5 on the hydraulic control unit **XIII** (proportional valve **Y033**/**034**) is released via the reversing valve **Y046** (valve **Y046** not energized) on the rear tipper.

The PIN 1-83 outlet on the controller **N004** energizes the proportional valve **Y033** (2).

The PIN 1-86 outlet on the controller **N004** energizes the proportional valve **Y034** (2).

The PIN 1-59 outlet on the controller **N004** does not energize the solenoid valve **Y046** (2).

Lower tipping trailer

With the touch button **S070** on the keypad **D005** a CAN message (CAN1) is sent to controller **N004**. From the controller **N004** proportional valve**Y034** is energized.

The PIN 1-81 outlet on the controller **N004** is energized in order to switch the solenoid valve **Y116** (check valve).

Touch button S085 – joystick shut-down for road travel (lock for long-haul travel) in the keypad D003

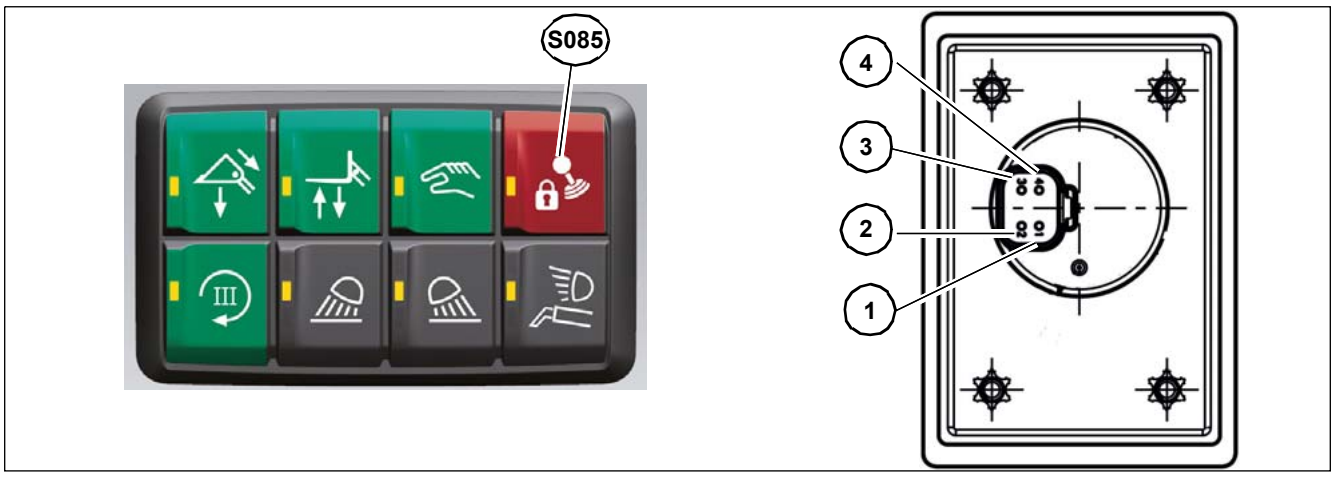

Pin assignment of keypad D003

PIN	Component	Measuring range
1	Voltage supply F032/5 A	12 V
2	Ground	Cabin
3	CAN 1	high
4	CAN 1	low

Function description

When the road travel lock function switch **S085** is switched to road travel lock ON, no hydraulic functions can be actuated. If the function is active, the touch button **S085** lights up.

Joystick shut-down switched on

With the touch button **S085** on the keypad **D003** a CAN message (CAN1) is sent to the controller **N004**. The controller **N004** deactivates all outputs to the proportional valves on the control unit.

Operator presence switch S104

The seat contact switch **S104** is composed of two switches that have been put into a single casing.

Driver not seated on the seat

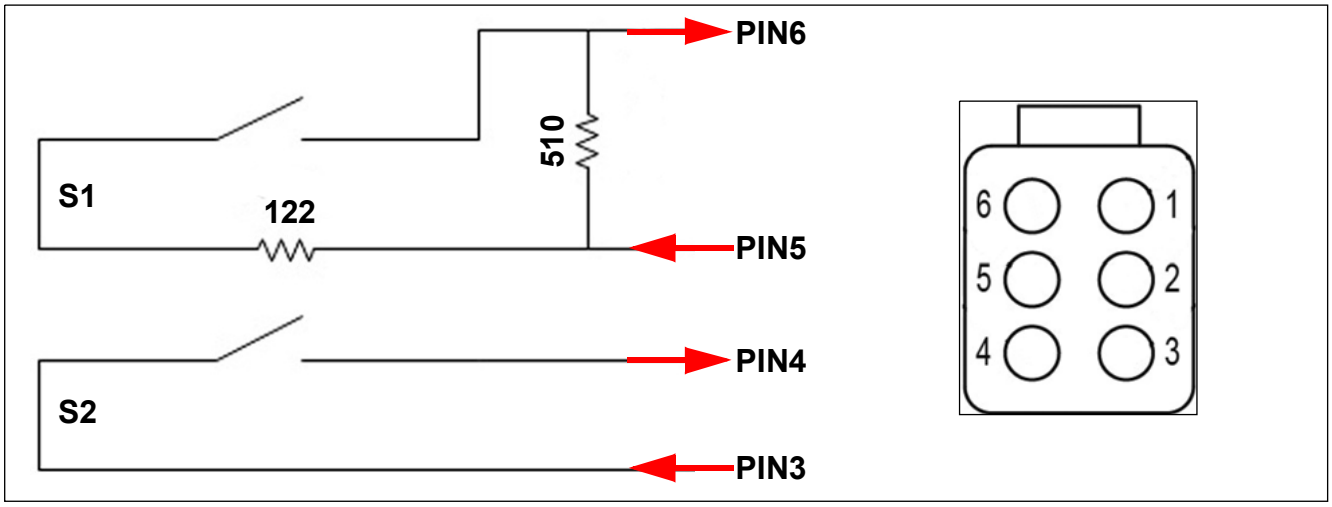

PIN	Connection	To PIN	Measuring range
1	Board voltage F038/25A (for air cushioned seat option)	–	12 V
2	Ground	Cabin	Ground
3	On-board voltage F014/5A	–	12 V
4	Signal to the controller N004	XE15 (1-39)	0 V
5	Output from controller N004	XE15 (1-04)	12 V
6	Signal to the controller N004	XE04 (2-44)	2 – 3 V

Operator not on seat when the function starts

Seat contact switch open

- Diesel engine cannot be started.
- The travel direction cannot be selected.

The following proportional valves are not energized.

1. Raising **Y066,** lowering **Y067** of telescopic arm
2. Fill shovel **Y068,** Empty shovel **Y069**
3. Retraction **Y023,** extension **Y024**of telescopic arm
4. Locking**Y016,** unlocking **Y017**
5. Solenoid valve for quickhitch lock **Y025**

Upper/lower rear additional control circuit

1. Raising **Y044** or lowering **Y045** tipper or raising **Y044** or lowering **Y045** auto hitch
2. Auto hitch tipper switch-over **Y046**
3. Unlock auto hitch **Y047**

Operator not in seat during active function

The following valves remain energized, even when the operator leaves the seat during the activated function.

Upper/lower rear additional control circuit

1. Raising **Y044** or lowering **Y045** tipper or raising **Y044** or lowering **Y045** auto hitch
2. Auto hitch tipper switch-over **Y046**
3. Locking permanent function of third control circuit **Y016**
4. Solenoid valve for changeover of front 4th control circuit **Y051**
5. PTO solenoid valve **Y120**
6. Rear hitch solenoid valves **Y117**, **Y118**, **Y129**

If the operator leaves the seat for longer than 3 s, the following functions will be stopped.

1. Retraction **Y023,** extension **Y024** of telescopic arm
2. Raising **Y066,** lowering **Y067** of telescopic arm
3. Fill shovel **Y068,** Empty shovel **Y069**
4. Locking **Y016,** unlocking **Y017**
5. If the lowering function **Y067** is still active after 3 s, the lowering speed is throttled in relation to the driving speed until the standstill of the lowering movement.
6. Below a speed of 7 km/h (4.3 mph), the drive is switched into neutral if the operator leaves the seat for more than 5 s.
7. If the driving speed is below 0.5 km/h (0.3 mph), after 1 s, it will be switched to neutral and a warning tone will sound.
8. A warning signal sounds at speeds over 7 km/h (4.3 mph)

Driver seated on the seat

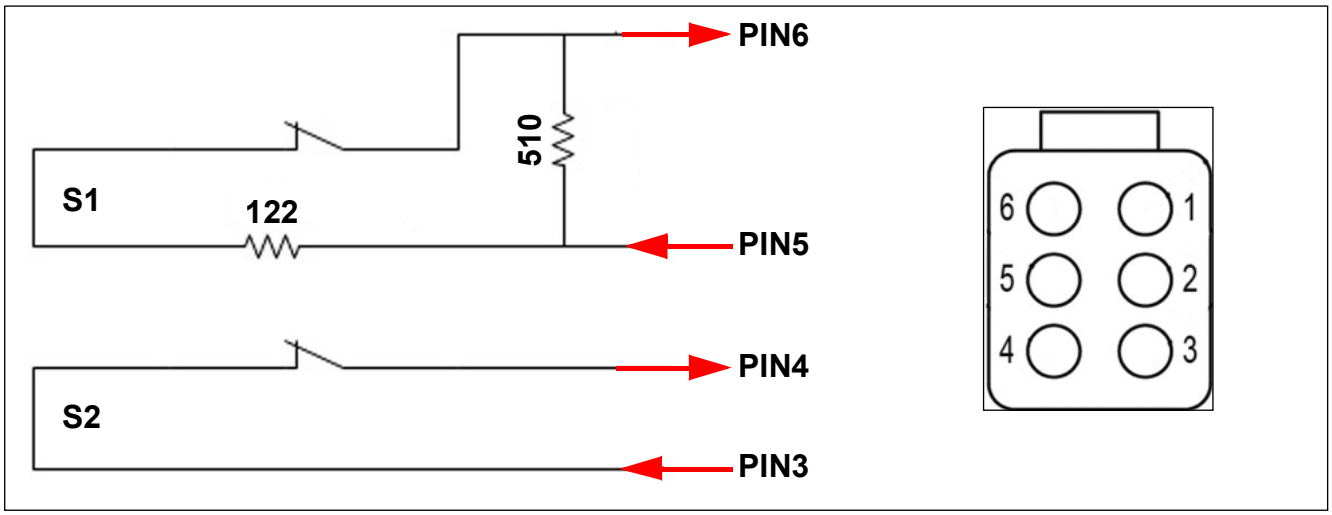

PIN	Connection	To PIN	Measuring range
1	Board voltage F038/25A (for air cushioned seat option)	–	12 V
2	Ground	Cabin	Ground
3	On-board voltage F014/5A	–	12 V
4	Signal to the controller N004	XE15 (1-39)	12 V
5	Output from controller N004	XE15 (1-04)	12 V
6	Signal to the controller N004	XE04 (2-44)	5 – 7 V

If a voltage of 5–7 V is applied to plug XE15 (1-04) and a voltage of 12 V to plug XE15 (1-39), the operator is in the operator's seat.

Seat contact switch closed

The vehicle can be used to its full extent

Machine runs without the driver on the seat

➥ The valves for the additional control circuits continue to be energised but have to be switched on before (operator on the seat)

If the operator leaves the seat for longer than 3 s, the following functions will be stopped.

1. Retraction **Y023,** extension **Y024** of telescopic arm
2. Raising **Y066,** lowering **Y067** of telescopic arm
3. Fill shovel **Y068,** Empty shovel **Y069**
4. Locking **Y016,** unlocking **Y017**
5. If the lowering function **Y067** is still active after 3 s, the lowering speed is throttled in relation to the driving speed until the standstill of the lowering movement.
6. Below a speed of 7 km/h (4.3 mph), the drive is switched into neutral if the operator leaves the seat for more than 5 s.
7. If the driving speed is below 0.5 km/h (0.3 mph), after 1 s, it will be switched to neutral and a warning tone will sound.
8. A warning signal sounds at speeds over 7 km/h (4.3 mph)

Belt contact switch S123 (option)

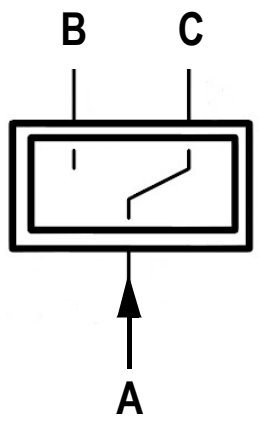

PIN	Connection	KCN (PIN)	Measuring range	
			buckled in	Not buckled in
A	On-board voltage F014/5A	–	12 V	12 V
B	Input to controller N004	XE15 (1-15)	10 V	0 V
C	Output to switching relay K110	K110 (86)	0 V	12 V

Seat belt not fastened

- Diesel engine cannot be started.
- The travel direction cannot be selected.

The following proportional valves are not energized.

1. Raising **Y066,** lowering **Y067** of telescopic arm
2. Fill shovel **Y068,** Empty shovel **Y069**
3. Retraction **Y023,** extension **Y024** of telescopic arm
4. Locking**Y016,** unlocking **Y017**
5. Solenoid valve for quickhitch lock **Y025**

Upper/lower rear additional control circuit

1. Raising **Y044** or lowering **Y045** tipper or raising **Y044** or lowering **Y045** auto hitch
2. Auto hitch tipper switch-over **Y046**

- Unlock auto hitch **Y047**

8.11 Control of the rear auto hitch/tipper/additional control circuit

Overview: control of the rear auto hitch/tipper/additional control circuit

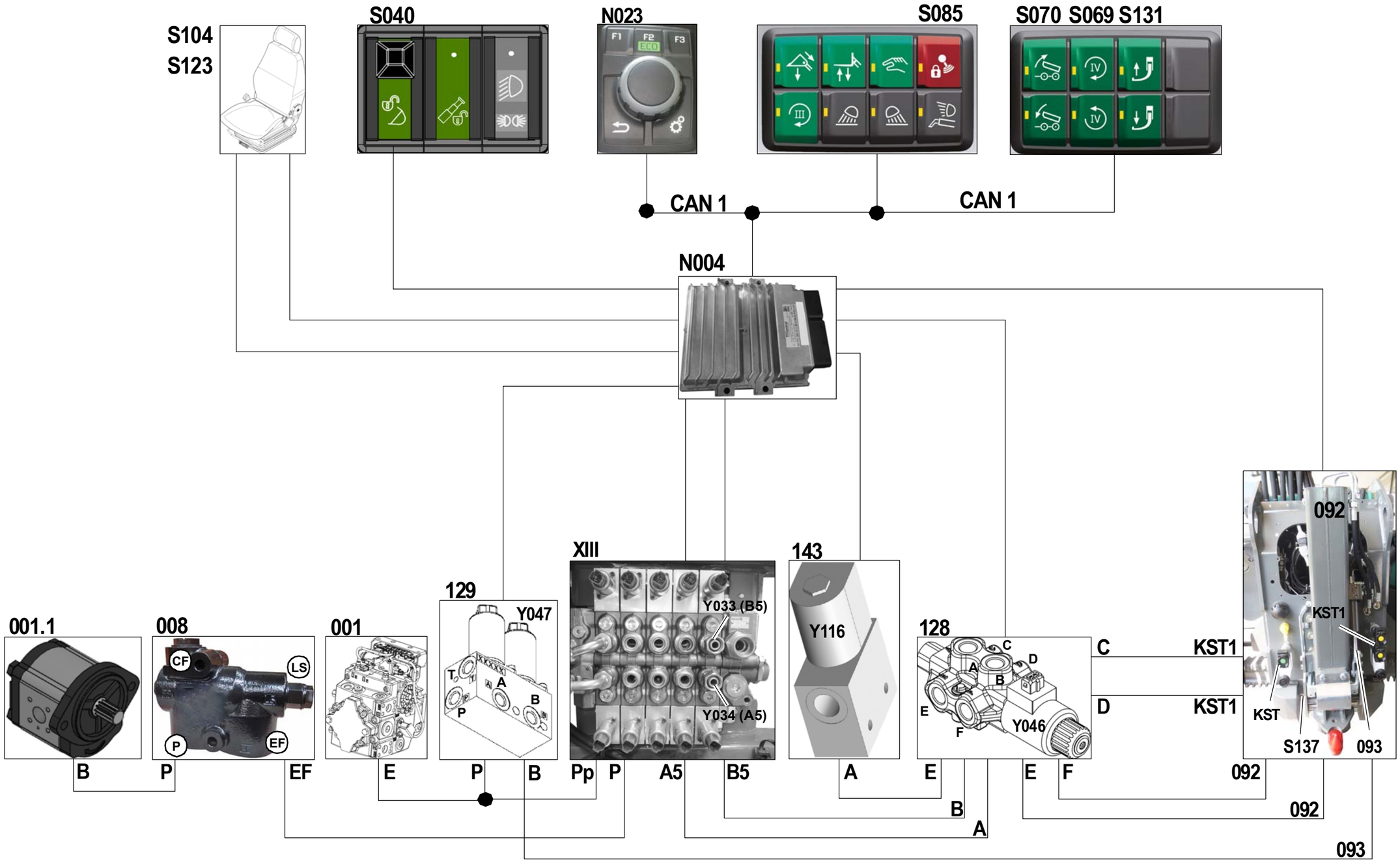

Description of the rear auto hitch/tipper/additional control circuit

Hydraulic components

Pos.	Component	Remarks
XIII	Main control unit (hydraulics)	HDS24
001	Boost pump	12 ccm/U (0.732 in³)
001.1	Constant pump work hydraulics	36 ccm/U (2.196 in³)
008	Priority valve	–
092	Autohitch ram	–
093	Autohitch locking cylinder	–
128	Reversing valve additional control circuit (Y046)	–
129	Unlock autohitch	–
143	Multiple way valve (de-pressurized circuit)	–
KST	Tipping trailer connection	80 l/min
KST 1	Rear additional control circuit	–

Electrical components

N004	Controller	HY-TTC 580-CP
N023	Oil volume setting	CAN 1
S040	Quickhitch lock push button	5 V
S069	Rear additional control circuit touch button	CAN 1
S070	Switch for raising/lowering the tipping trailer	CAN 1
S085	Joystick cut-off	CAN 1
S104	Operator presence switch	–
S123	Seat belt contact switch	–
S131	Raise/lower auto hitch touch button	CAN 1
S137	Upper auto hitch sensor	CAN 1
Y033	Additional control circuit proportional valve, (raise auto hitch and tipper)	4,7 Ω
Y034	Additional control circuit proportional valve, (lower auto hitch and tipper)	4,7 Ω
Y047	Auto-Hitch unlock solenoid valve	12 V
Y116	Only lower tipper solenoid valve in connection with auto hitch	12 V

Pos.	Component	Designation
CAN1	CAN1 – Work hydraulics	–
CAN0	CAN0 – Drive	–

Hydraulic control unit XIII

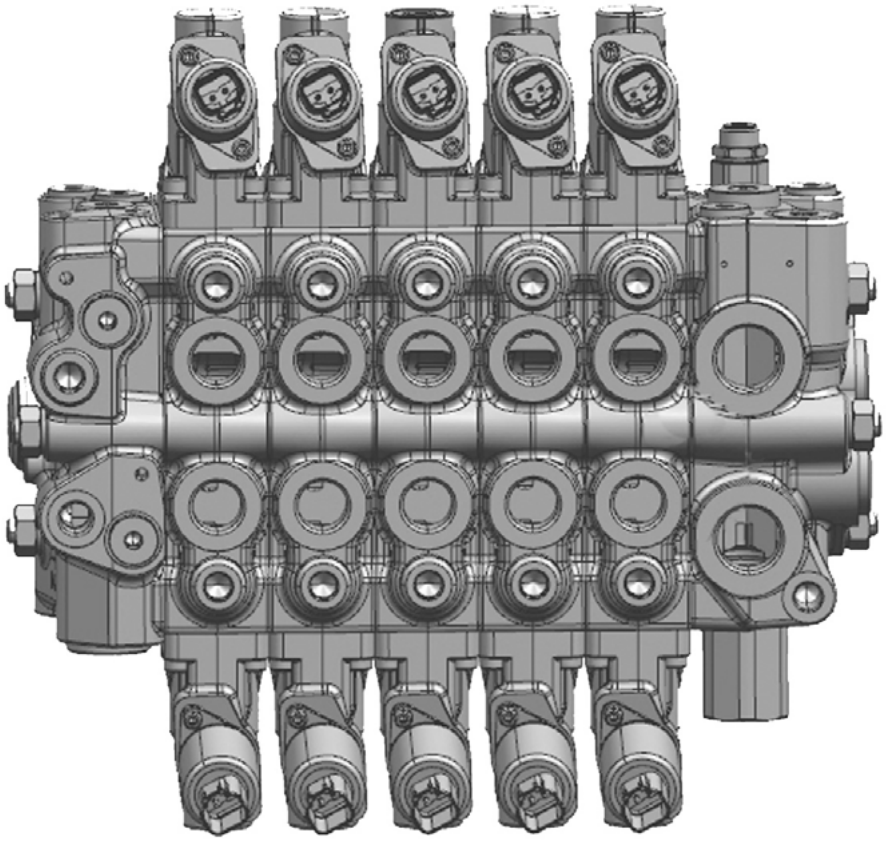

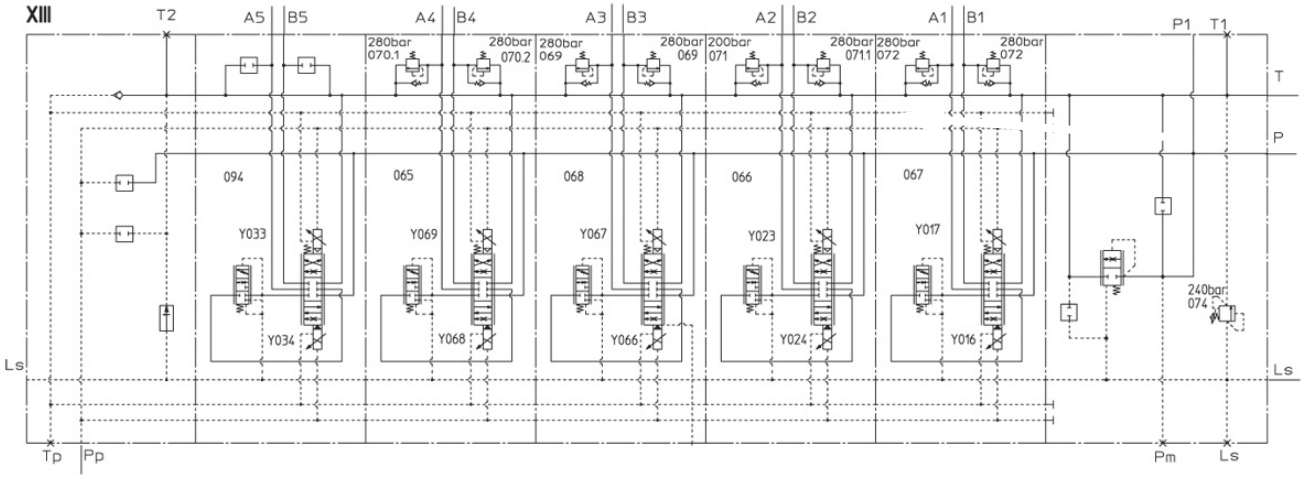

Hydraulic control unit XIII

Hydraulic control units **XIII** from 4 to 5 sections will be used. Section 5 does not have a secondary valve.

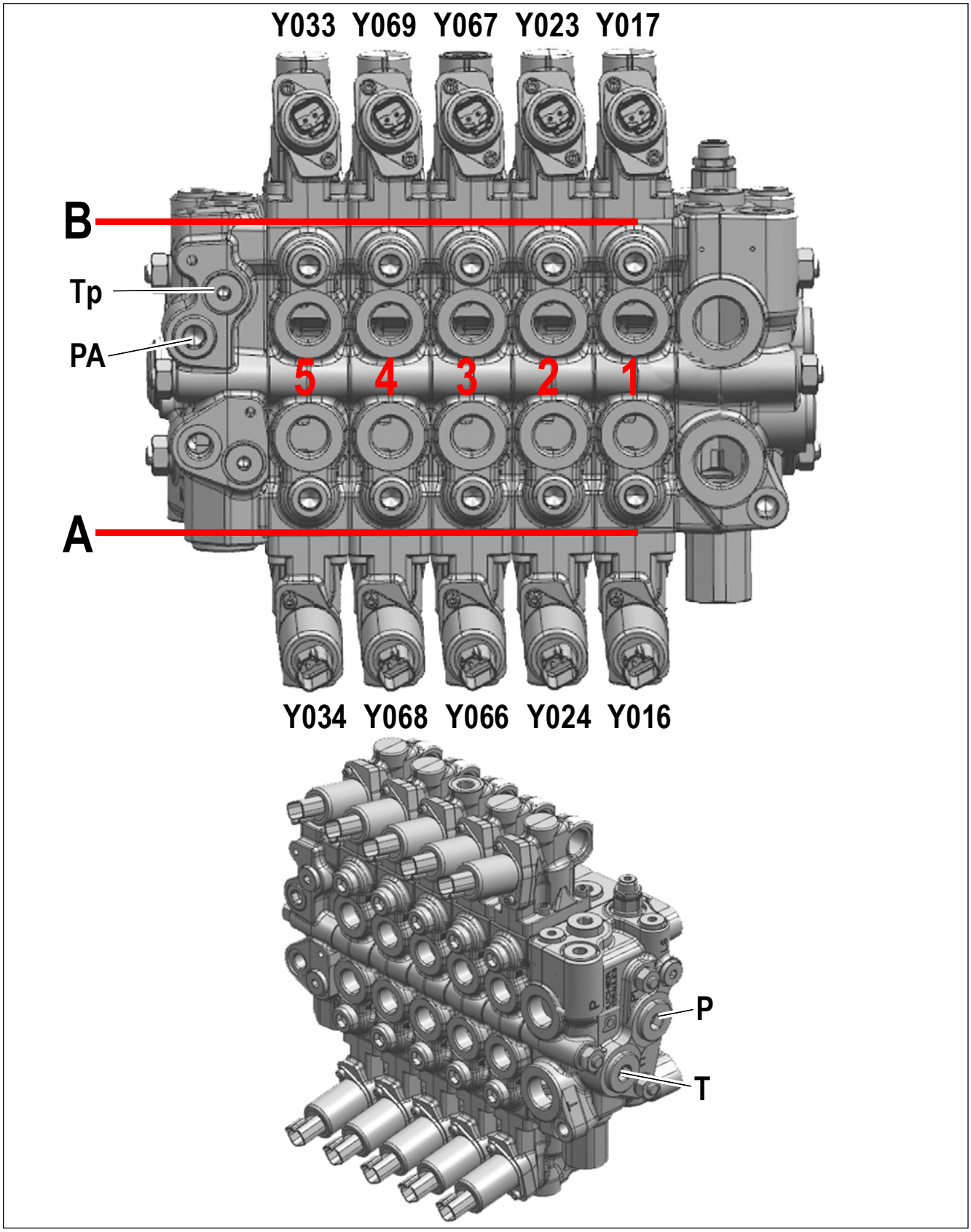

Description: control unit XIII

Pos.	Component	Remarks
A	Port designation on control valve XIII	Section 1–5 bottom side
B	Port designation on control valve XIII	Section 1–5 rod side
P	Work hydraulics pump I	36 ccm/U (2.196 in³)
PA	Pilot control (boost pressure)	Approx. 30 bar (435.10 psi)
T	Tank recirculation via the return filter	–
Tp	Tank venting for the pilot caps	–
Y016	Lock proportional valve (Section 1)	PWM 4.7 Ω
Y017	Unlock proportional valve (Section 1)	PWM 4.7 Ω
Y023	Retract proportional valve (Section 2)	PWM 4.7 Ω
Y024	Extend proportional valve (Section 2)	PWM 4.7 Ω
Y033	Proportional valve additional circuit (Section 5)	PWM 4.7 Ω
Y034	Proportional valve additional circuit (Section 5)	PWM 4.7 Ω
Y066	Raise proportional valve (Section 3)	PWM 4.7 Ω
Y067	Lower proportional valve (Section 3)	PWM 4.7 Ω
Y068	Tilt back proportional valve (Section 4)	PWM 4.7 Ω
Y069	Tip out proportional valve (Section 4)	PWM 4.7 Ω

Valves from hydraulic control unit XIII

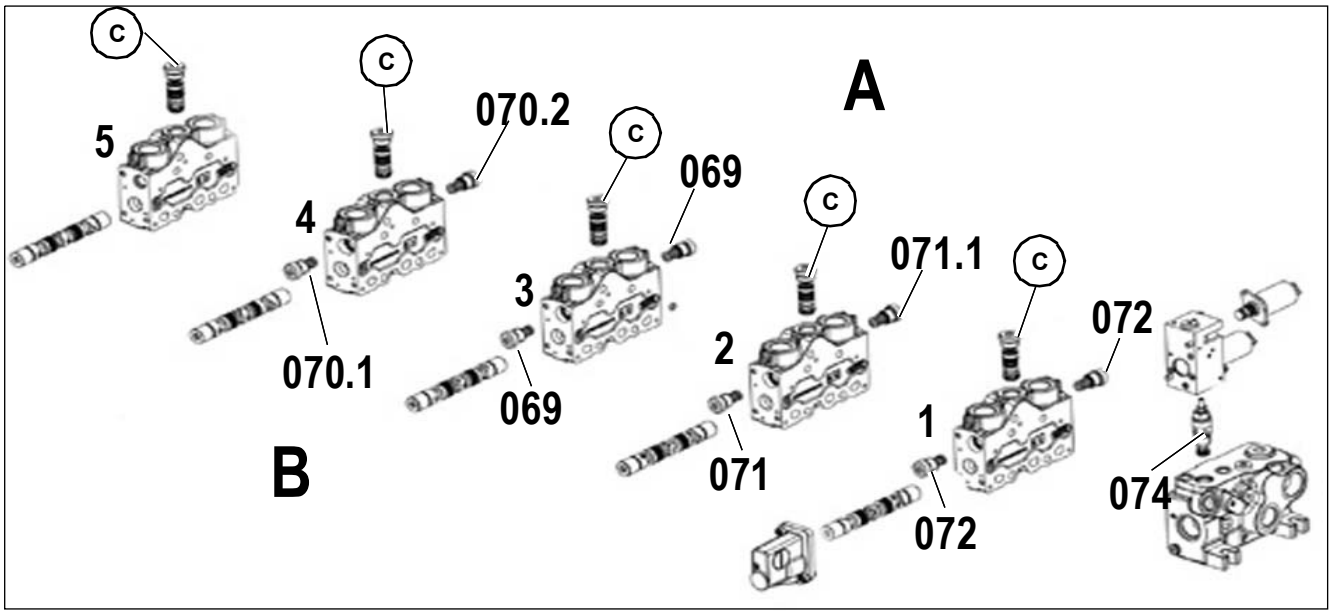

Description: control unit XIII

Pos.	Component	Remarks
1	3rd control circuit section 067	80 l/min (21.10 US gpm)
2	Push-out ram section 066	A2 – 100 l/min (26.4 US gpm) B2 – 80 l/min (21.10 US gpm)
3	Lift ram section 068	100 l/min (26.4 US gpm)
4	Tilt ram section 065	A4 – 100 l/min (26.4 US gpm) B4 – 80 l/min (21.10 US gpm)
5	Section rear additional control circuit Hitch/Tipper 094	80 l/min (21.10 US gpm)
A	Port designation on control valve XIII	Section 1–5 bottom side
B	Port designation on control valve XIII	Section 1–5 rod side
C	Pressure compensators	–
069	Secondary valve for raise lifting cylinder (B)	270–290 bar (3916–4206 psi)
069	Secondary valve for lower lifting cylinder (A)	270–290 bar (3916–4206 psi)
070.1	Secondary valve for tipping cylinder rod side fill shovel (A)	270–290 bar (3916–4206 psi)
070.2	Secondary valve for tipping cylinder bottom side empty shovel (B4)	270–290 bar (3916–4206 psi)
071	Secondary valve for push-out ram Extend bottom side (B)	190–210 bar (2755–3045 psi)
071.1	Secondary valve for push-out ram Retract rod side (A)	270–290 bar (3916–4206 psi)
072	Secondary valve 3rd control circuit, lock/unlock (A/B)	270–290 bar (3916–4206 psi)
074	LS pressure relief valve	240 bar (3480.91 psi)

Work hydraulics gear pump 001.1

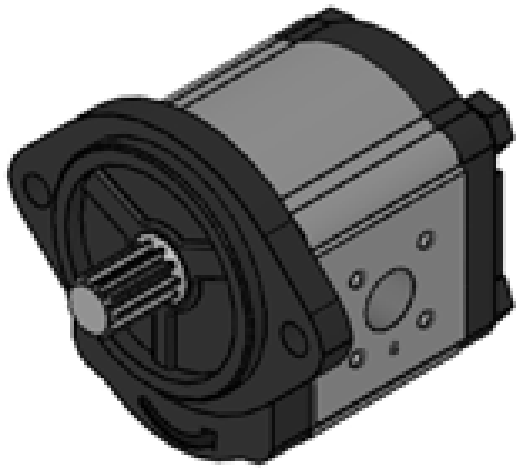

Component	Remarks	System pressure
001.1	36 ccm/U (2.196 in³)	230–250 bar (2320.6 – 2755.72 psi)

Function description

The gear pump for working hydraulics **I** supplies the steering orbitrol **IV** and the main control unit **XIII** with oil via the priority valve **008**. The oil flow is filtered by a high-pressure filter **167** directly after the gear pump **I**.

Priority valve 008

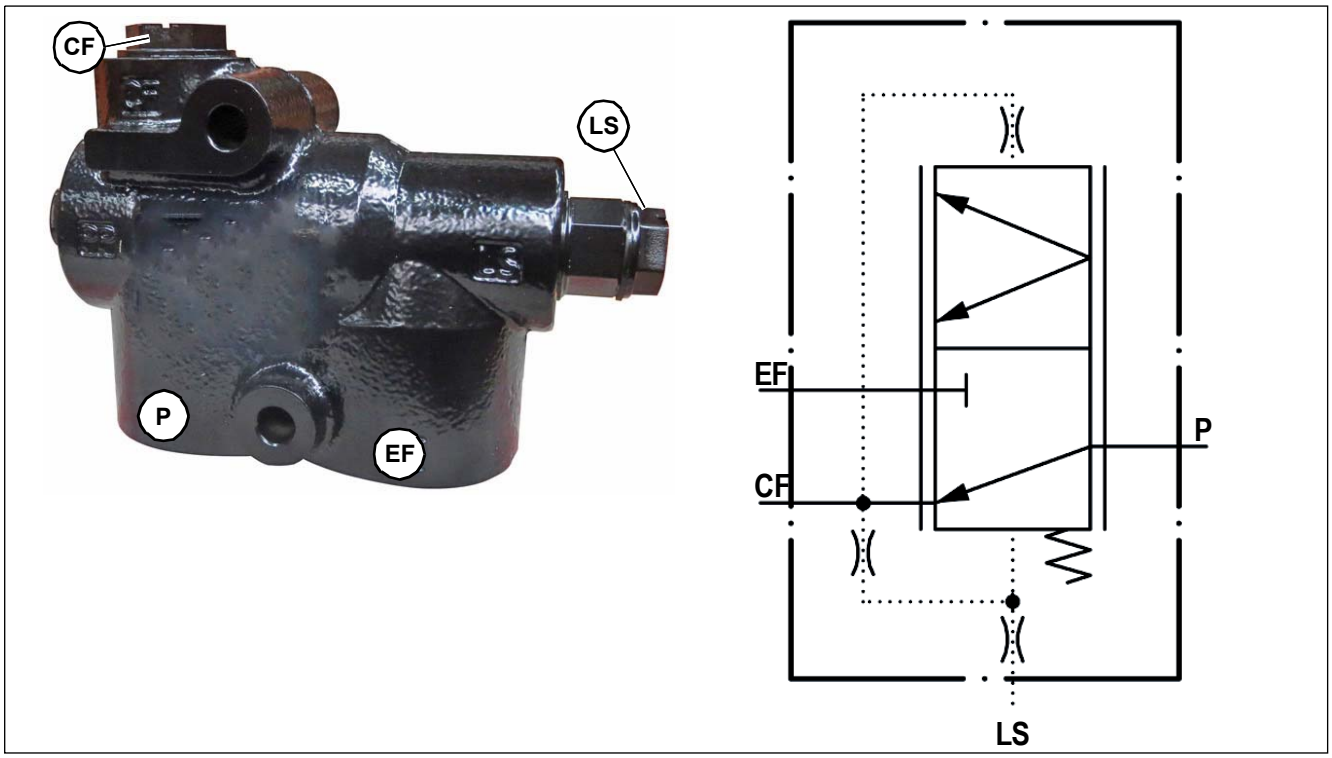

Connection	Power supply
P	Input from gear pump, working hydraulics **I**
LS	Input from steering orbitrol **IV**, port **LS**
CF	Output to steering orbitrol **IV**, port **P**
EF	Output to main control unit **XIII**, port **P1**

Function description

The priority valve **008** is responsible for dividing the oil flow from the gear pump work hydraulics **I into** the steering system and work hydraulics. Here, the oil is primarily supplied to the steering system **IV**.

Function

The oil flow coming from the gear pump **I** passes through port **P** and an internal duct of the priority valve **008** to the control spool. The control spool is then pushed against the spring via the area ratio and the oil flow is distributed evenly between the steering orbitrol **IV** and the main control unit **XIII**..

As soon as the steering orbitrol **IV** is actuated it generates an LS signal, which acts on the control spool of the priority valve **008**. Through the combination of the spring force and the LS signal the control spool is pushed back towards the initial position and the steering assumes priority. This can mean that functions of the working hydraulics are executed more slowly during steering.

Reversing valve of rear additional control circuit 128 (Y046)

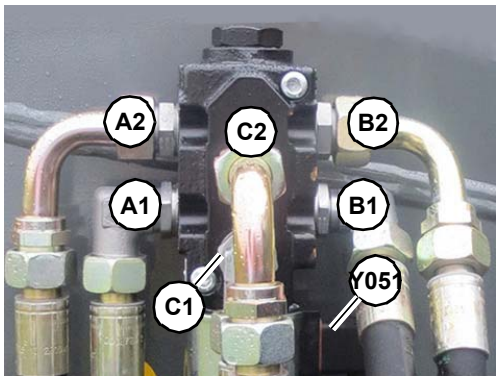

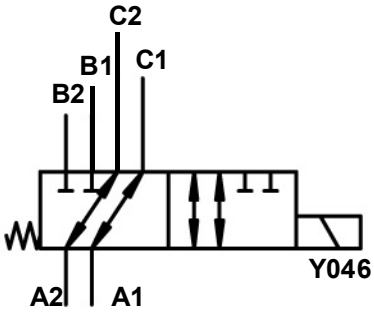

Connection	Power supply
A1	Input from section **B5**
A2	Input from section A5
B1	Output 4th service
B2	Output 4th service
C1	Output raise tipper or auto hitch
C2	Output lower tipper or auto hitch

Component	Function	Remarks
Y046	Solenoid valve switch over fourth service rear for additional control circuit rear, tipper and auto hitch	12 V

Function description

The reversing valve is used to control various users with one oil supply. If the solenoid valve **Y046** is not energized, the fourth double action service can be used. If the reversing valve is energized, either the tipper or auto hitch is possible. When using the auto hitch, the solenoid valve **Y116** will be energized simultaneously in order to drain the bottom side of the auto hitch against the tank.

Valve block 129 (Y047/Y113)

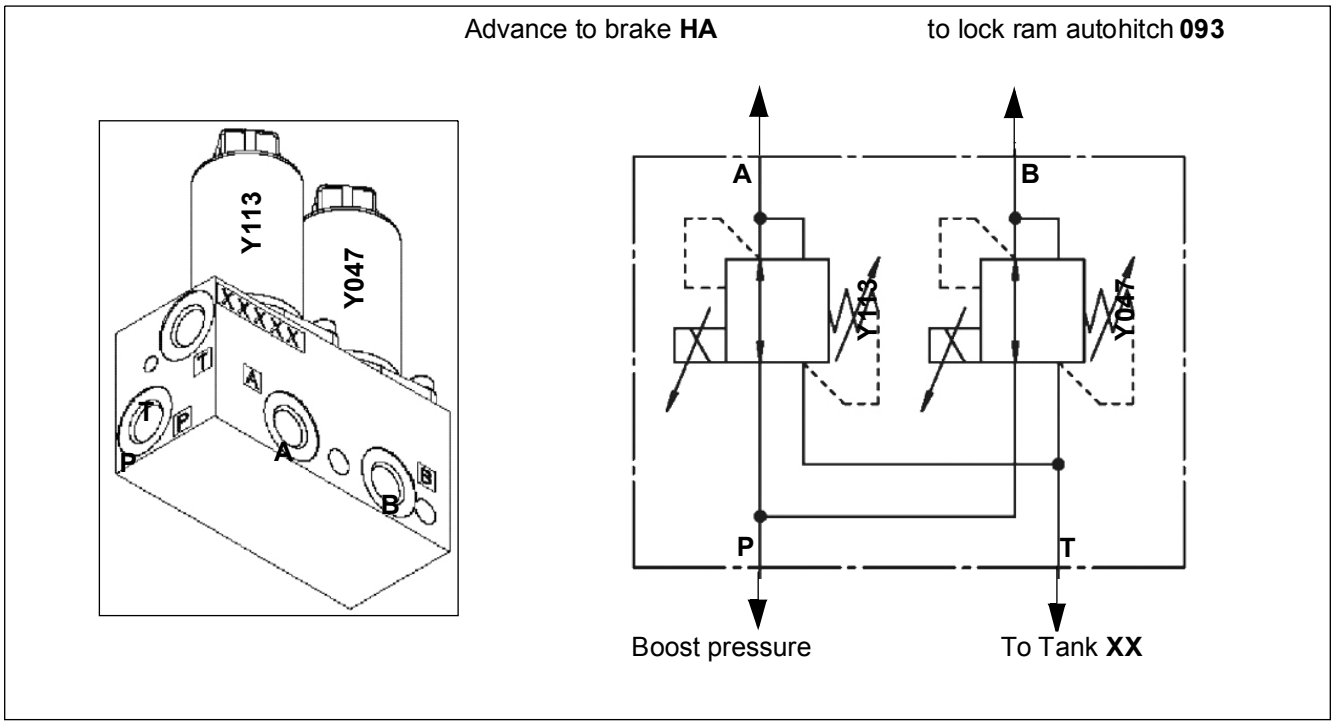

Connection	Power supply
A	Output advancement brake, rear axis
B	Output of locking cylinder **093** unlock auto hitch
P	Boost pressure
T	Output to tank **XX**

Component	Function	Remarks
Y047	Auto-Hitch unlock solenoid valve	12 V
Y113	Solenoid valve (hydraulic trailer brake)	PWM

Function description

Solenoid valve Y047

Through the unlock auto hitch solenoid valve **Y047**, the locking cylinder **093** is opened via the boost pressure. The unlock auto hitch solenoid valve**Y047** is energized via the touch button **S131** lower auto hitch.

Proportional valve Y113

With the proportional valve **Y113** hydraulic trailer brake, the boost pressure is transmitted to the trailer brake valve **140**. The trailer is thus loaded depending on the brake pressure of a brake overfeed.

Relief valve for lower tipper 143 (Y116)

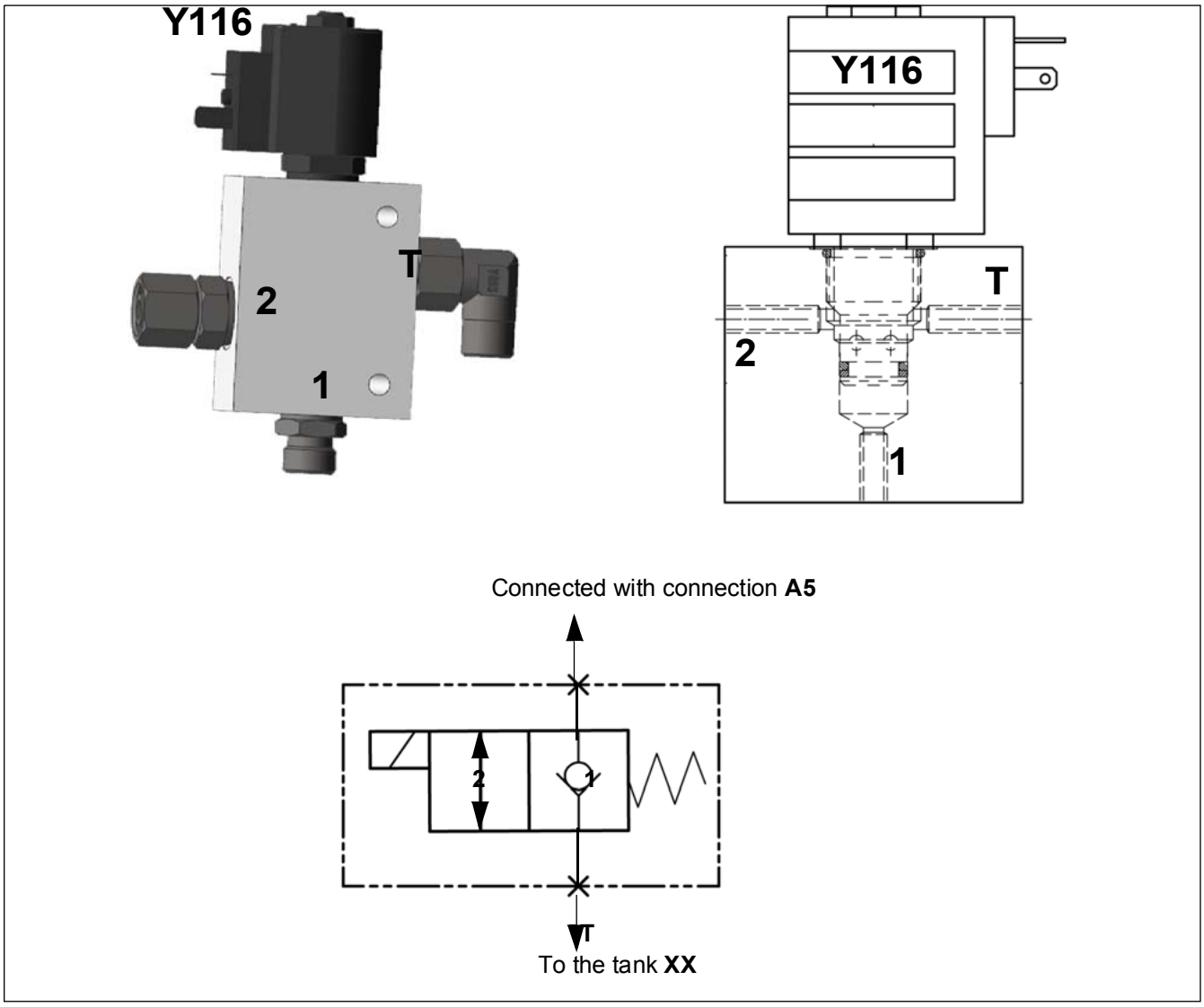

Connection	Power supply
1	From the hydraulic control unit **XIII** (bottom side A5)
2	Lower tipper solenoid valve **Y116** energized with the auto hitch (bottom side) connected
T	Connection to the tank
Y116	Solenoid valve for lowering tipper **Y116**

Function description

Solenoid valve **Y116** is energized with circuit breaker **S070** (lower tipper). In order to obtain circulation from the hydraulic control unit **XII** connection A5 to the tank. In other words, from hydraulic control unit **XII** connection **B5** is used to lower the tipper.

The solenoid valve **Y116** is only required in connection with the auto hitch.

Description of oil quantity adjustment N023

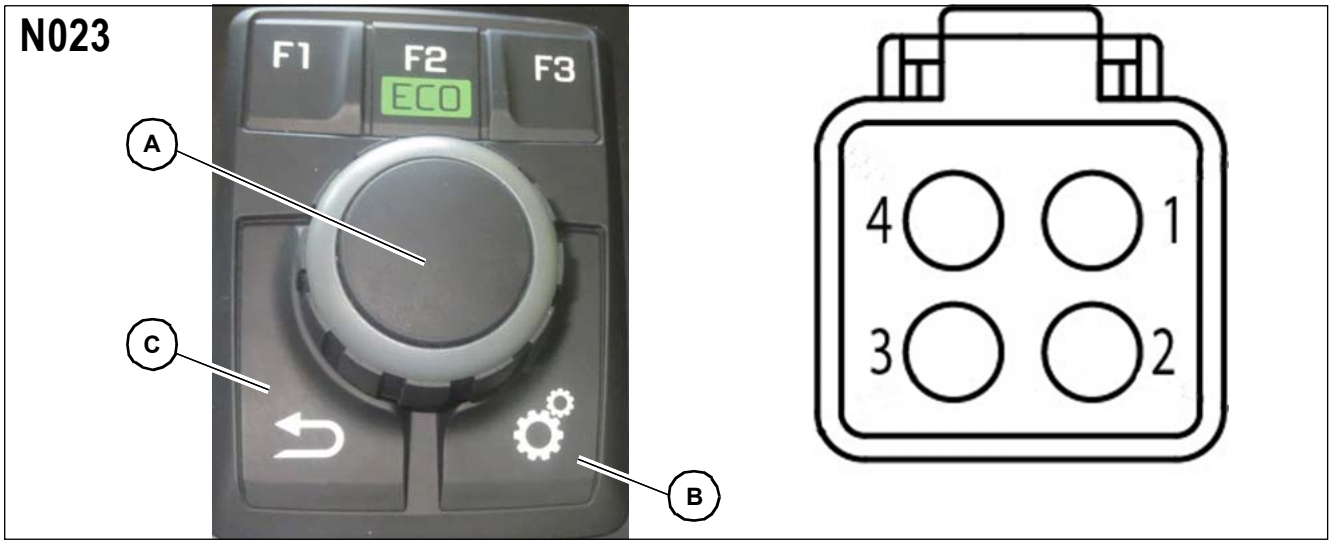

Pin assignment of oil quantity adjustment N023

PIN	Component	Measuring range
1	Voltage supply F032/5 A	12 V
2	Ground	Cabin
3	CAN 1	high
4	CAN 1	low

Function description

In order to be able to use the oil quantity adjustment, the ignition must be switched on, the seat must be occupied.

The CAN message is sent to controller **N004** Pin 2-10 (CAN1-LOW) and PIN 2-23 (CAN1-High).

Selection types

PIN	Component
F1	Touch button for locking/unlocking oil quantity adjustment **S030/031**
F2	Touch button for oil quantity adjustment of third control circuit **S033**
F3	Touch button for oil quantity adjustment of tipper **S070**, fourth additional control circuit in the rear **S069**
A	Rotary switch for modifying the value
B	Hold touch button for 3 s in order to access the menu for oil quantity adjustment
C	Touch button for cancel or return

Change quantity of oil

Turn rotary switch **A** to the right

➥ Value is increased

Turn rotary switch **A** to the left

➥ Value is decreased

Press rotary switch **A** in order to confirm the value

Touch button S040 - quick hitch system lock

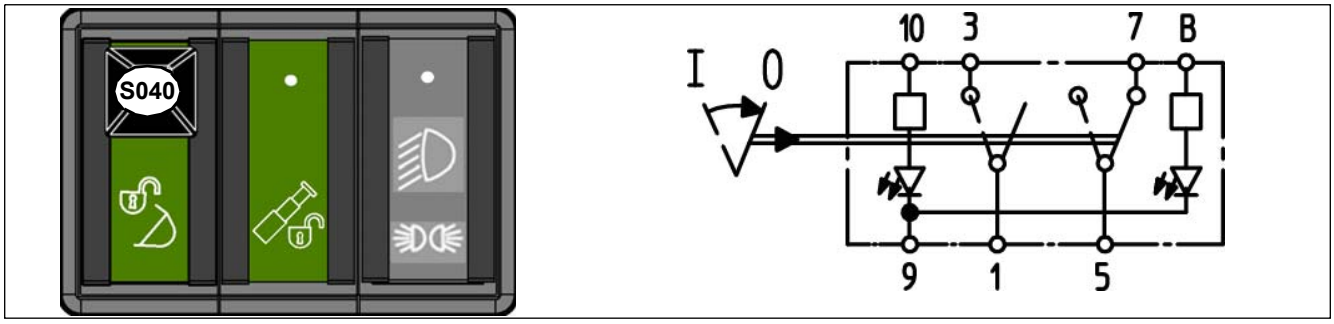

Touch button S040 quick coupling lock switched off 0

PIN	Component	Measuring range
1	Output to controller N004 XE15 (1-17)	0 V
3	Output from controller N004 XE04 (2-21)	5 V
5	Output to controller N004 XE15 (1-41)	5 V
7	Output from controller N004 XE04 (2-21)	5 V
9	Lighting ground (cab)	
10	Board voltage lighting F018/10 A	12 V
B	Lighting for control	0 V

Touch button S040 quick coupling lock switched on 1

PIN	Component	Measuring range
1	Output to controller N004 XE15 (1-17)	5 V
3	Output from controller N004 XE04 (2-21)	5 V
5	Output to controller N004 XE15 (1-41)	0 V
7	Input from controller N004 XE04 (2-21)	5 V
9	Lighting ground (cab)	
10	Board voltage lighting F018/10 A	12 V
B	Lighting for control	5 V

Function description

With the touch button **S040** quick coupler system lock, the functions quick coupler system unlock **Y025,** emergency lowering via lowering **Y067** and auto hitch lock **Y047** are controlled.

Touch button S069 – rear additional control circuit, in the keypad D005

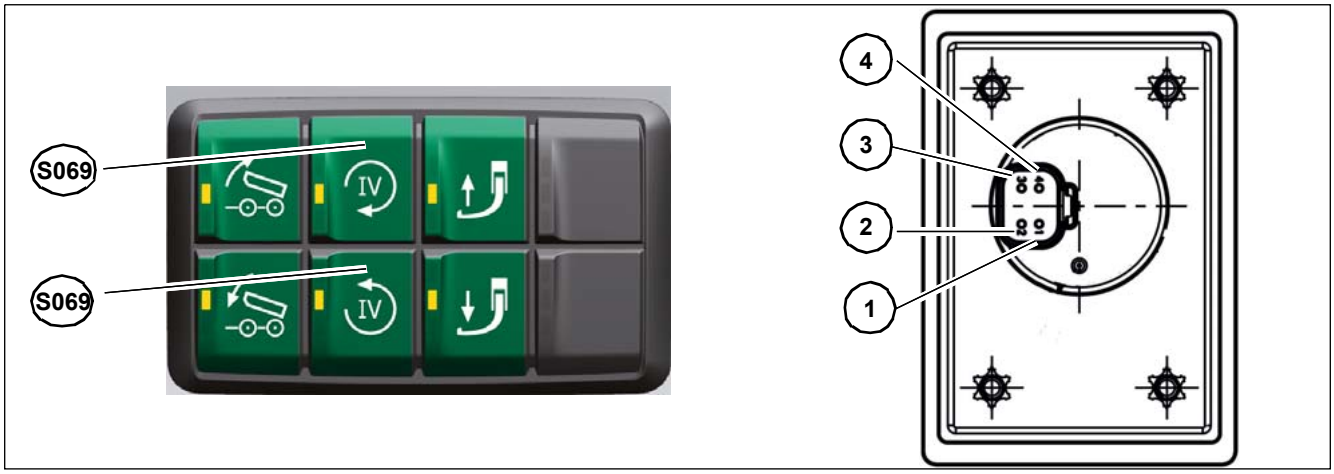

Pin assignment of keypad D005

PIN	Component	Measuring range
1	Voltage supply F032/5 A	12 V
2	Ground	Cabin
3	CAN 1	high
4	CAN 1	low

Function description

With the additional control circuit touch button **S069**, the pre-set amount of oil (20%) is available to the rear additional circuit. The oil quantity can be changed via the oil quantity adjustment **N023**. If the function is active, the touch button **S069** lights up.

Additional control circuit (double action)

With the touch button **S069** on the keypad **D005** a CAN message (CAN1) is sent to controller **N004**. From the controller **N004**, the reversing valve **Y046** is energized. The oil flow from section 5 on the hydraulic control unit **XIII** (proportional valve **Y033**/**034**) is released via the reversing valve **Y046** on the rear additional control circuit.

The PIN 1-83 outlet on the controller **N004** energizes the proportional valve **Y033** (2).

The PIN 1-86 outlet on the controller **N004** energizes the proportional valve **Y034** (2).

The PIN 1-59 outlet on the controller **N004** energizes the solenoid valve **Y046** (2).

Touch button S070 – tipper in the keypad D005

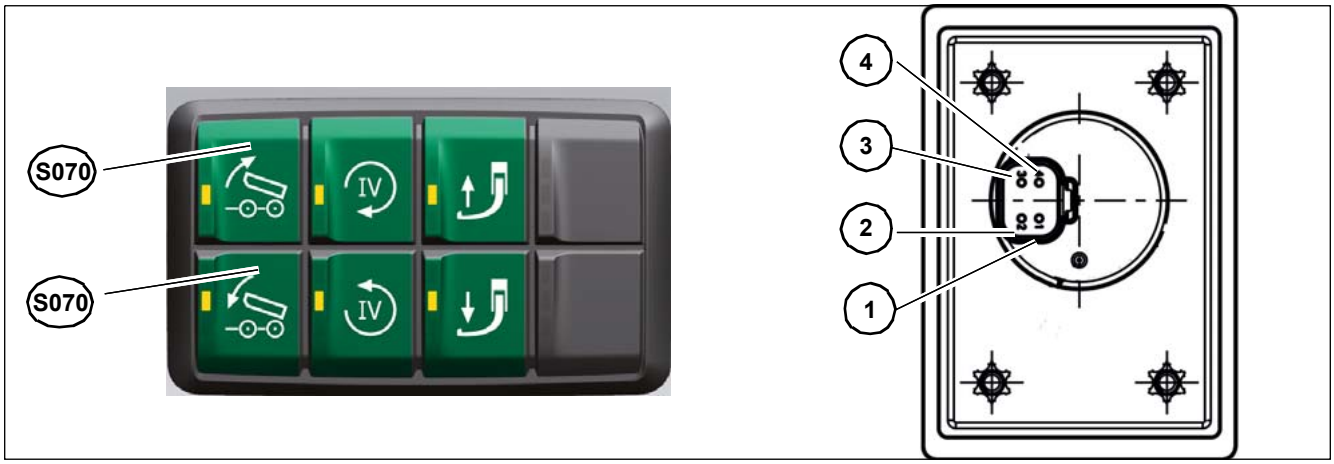

Pin assignment of keypad D005

PIN	Component	Measuring range
1	Voltage supply F032/5 A	12 V
2	Ground	Cabin
3	CAN 1	high
4	CAN 1	low

Function description

With the additional control circuit touch button **S070**, the pre-set amount of oil (20%) is available to the rear tipper. The oil quantity can be changed via the oil quantity adjustment **N023**. The raise tipper function is active up to a speed of 16 km/h (9.9 mph). From 17 km/h (10.7 mph), the raise tipper function is locked. In connection with an auto hitch, the solenoid valve **Y116** is also energized. If the function is active, the touch button **S070** lights up.

Raise tipping trailer

With the touch button **S070** on the keypad **D005** a CAN message (CAN1) is sent to controller **N004**. The proportional valve **Y033** (PIN2) is controlled via a PWM signal from the controller **N004** (PIN 83). The oil flow from section 5 on the hydraulic control unit **XIII** (proportional valve **Y033**/**034**) is released via the reversing valve **Y046** (valve **Y046** not energized) on the rear tipper.

The PIN 1-59 outlet on the controller **N004** does not energize the solenoid valve **Y046** (2).

Lower tipping trailer

With the touch button **S070** on the keypad **D005** a CAN message (CAN1) is sent to controller **N004**. The proportional valve **Y034** (PIN2) is controlled via a PWM signal from the controller **N004** (PIN 1-86). At the same time, this solenoid valve **Y116** (check valve) is energized from the controller **N004** PIN 1-81.

Touch button S085 – joystick shut-down for road travel (lock for long-haul travel) in the keypad D003

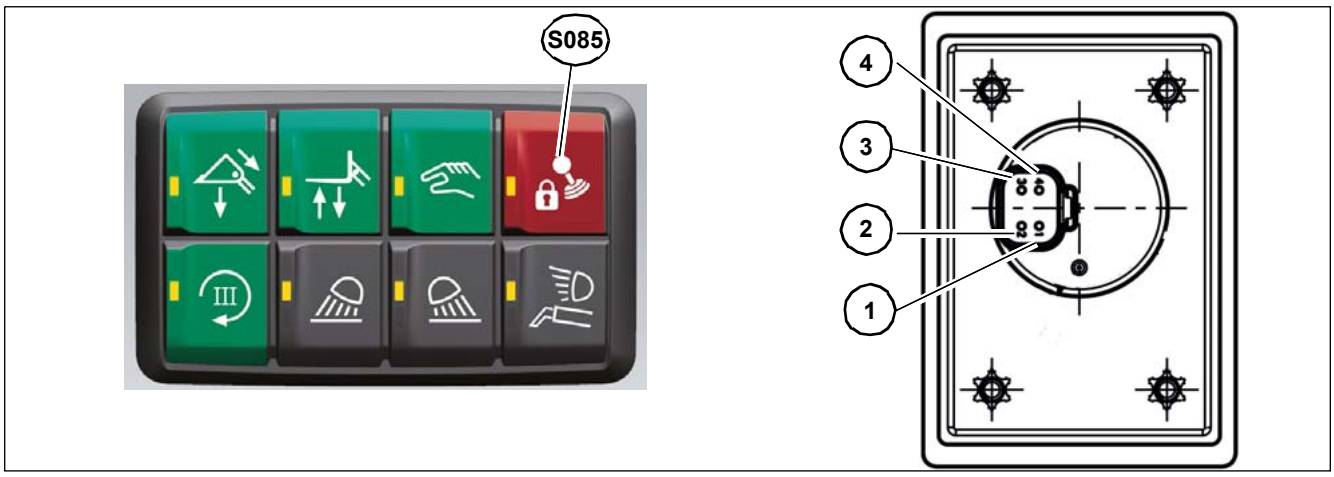

Pin assignment of keypad D003

PIN	Component	Measuring range
1	Voltage supply F032/5 A	12 V
2	Ground	Cabin
3	CAN 1	high
4	CAN 1	low

Function description

When the road travel lock function switch **S085** is switched to road travel lock ON, no hydraulic functions can be actuated. If the function is active, the touch button **S085** lights up.

Joystick shut-down switched on

With the touch button **S085** on the keypad **D003** a CAN message (CAN1) is sent to controller **N004**. The controller **N004** deactivates all outputs to the proportional valves on the control unit.

Operator presence switch S104

The seat contact switch **S104** is composed of two switches that have been put into a single casing.

Driver not seated on the seat

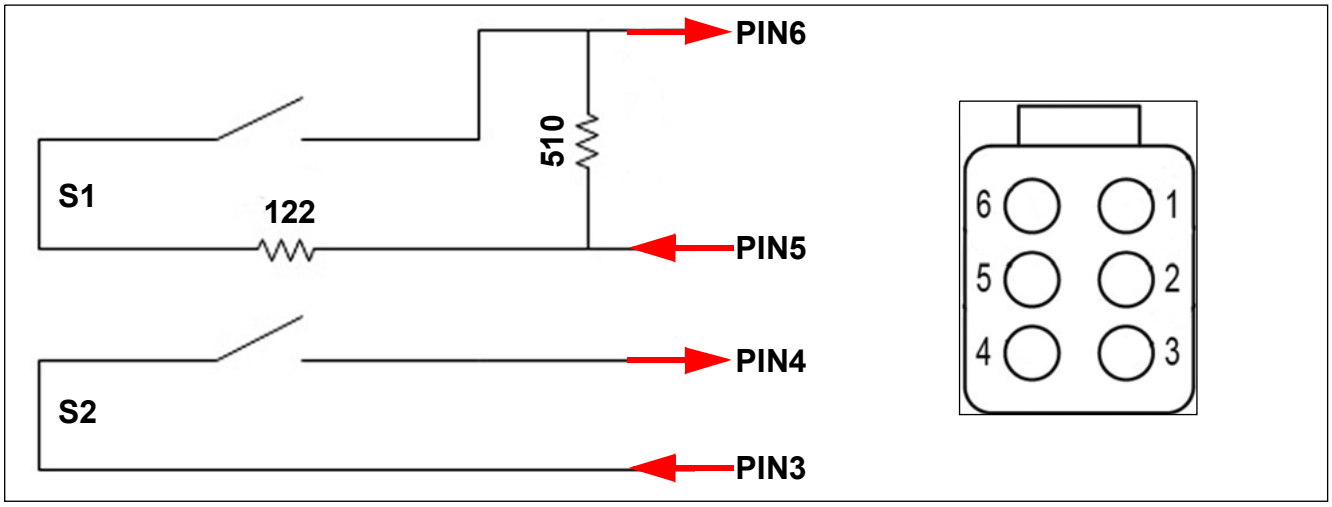

PIN	Component	To PIN	Measuring range
1	Board voltage F038/25A (for air cushioned seat option)	–	12 V
2	Ground	Cabin	Ground
3	On-board voltage F014/5A	–	12 V
4	Signal to controller N004	XE15 (1-39)	0 V
5	Output from controller N004	XE15 (1-04)	12 V
6	Signal to controller N004	XE04 (2-44)	2 – 3 V

Operator not on seat when the function starts

Seat contact switch open

- Diesel engine cannot be started.
- The travel direction cannot be selected.

The following proportional valves are not energized.

1. Raising **Y066,** lowering **Y067** of telescopic arm
2. Fill shovel **Y068,** Empty shovel **Y069**
3. Retraction **Y023,** extension **Y024** of telescopic arm
4. Locking **Y016,** unlocking **Y017**
5. Solenoid valve for quickhitch lock **Y025**

Upper/lower rear additional control circuit

1. Raising **Y044** or lowering **Y045** tipper or raising **Y044** or lowering **Y045** auto hitch
2. Auto hitch tipper switch-over **Y046**
3. Unlock auto hitch **Y047**

Operator not in seat during active function

The following valves remain energized, even when the operator leaves the seat during the activated function.

Upper/lower rear additional control circuit

1. Raising **Y044** or lowering **Y045** tipper or raising **Y044** or lowering **Y045** auto hitch
2. Auto hitch tipper switch-over **Y046**
3. Locking permanent function of third control circuit **Y016**
4. Solenoid valve for changeover of front 4th control circuit **Y051**
5. PTO solenoid valve **Y120**
6. Rear hitch solenoid valves **Y117**, **Y118**, **Y129**

If the operator leaves the seat for longer than 3 s, the following functions will be stopped.

1. Retraction **Y023,** extension **Y024** of telescopic arm
2. Raising **Y066,** lowering **Y067** of telescopic arm
3. Fill shovel **Y068,** Empty shovel **Y069**
4. Locking **Y016,** unlocking **Y017**
5. If the lowering function**Y067** is still active after 3 s, the lowering speed is throttled in relation to the driving speed until the standstill of the lowering movement.
6. Below a speed of 7 km/h (4.3 mph), the drive is switched into neutral if the operator leaves the seat for more than 5 s.
7. If the driving speed is below 0.5 km/h (0.3 mph), after 1 s, it will be switched to neutral and a warning tone will sound.
8. A warning signal sounds at speeds over 7 km/h (4.3 mph)

Driver seated on the seat

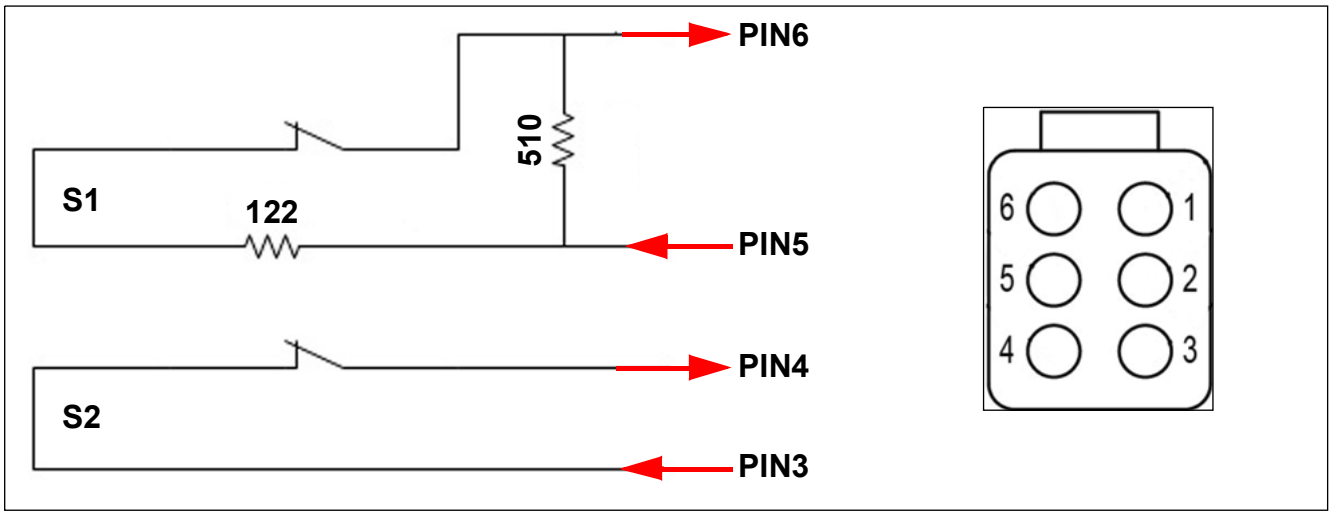

PIN	Component	To PIN	Measuring range
1	Board voltage F038/25A (for air cushioned seat option)	–	12 V
2	Ground	Cabin	Ground
3	On-board voltage F014/5A	–	12 V
4	Signal to controller N004	XE15 (1-39)	12 V
5	Output from controller N004	XE15 (1-04)	12 V
6	Signal to controller N004	XE04 (2-44)	5 – 7 V

If a voltage of 5–7 V is applied to plug XE15 (1-04) and a voltage of 12 V to plug XE15 (1-39), the operator is in the operator's seat.

Seat contact switch closed

The vehicle can be used to its full extent

Machine runs without the driver on the seat

➥ The valves for the additional control circuits continue to be energised but have to be switched on before (operator on the seat)

If the operator leaves the seat for longer than 3 s, the following functions will be stopped.

1. Retraction **Y023,** extension **Y024** of telescopic arm
2. Raising **Y066,** lowering **Y067** of telescopic arm
3. Fill shovel **Y068,** Empty shovel **Y069**
4. Locking **Y016,** unlocking **Y017**
5. If the lowering function**Y067** is still active after 3 s, the lowering speed is throttled in relation to the driving speed until the standstill of the lowering movement.
6. Below a speed of 7 km/h (4.3 mph), the drive is switched into neutral if the operator leaves the seat for more than 5 s.
7. If the driving speed is below 0.5 km/h (0.3 mph), after 1 s, it will be switched to neutral and a warning tone will sound.
8. A warning signal sounds at speeds over 7 km/h (4.3 mph)

Belt contact switch S123 (option)

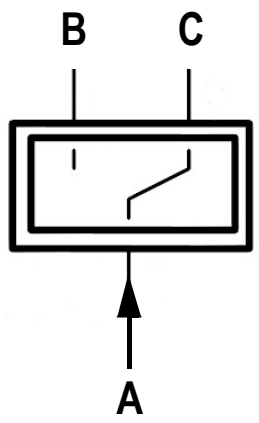

PIN	Component	KCN (PIN)	Measuring range	
			buckled in	Not buckled in
A	On-board voltage F014/5A	–	12 V	12 V
B	Input to controller N004	XE15 (1-15)	10 V	0 V
C	Output to switching relay K110	K110 (86)	0 V	12 V

Seat belt not fastened

- Diesel engine cannot be started.
- The travel direction cannot be selected.

The following proportional valves are not energized.

1. Raising **Y066,** lowering **Y067** of telescopic arm
2. Fill shovel **Y068,** Empty shovel **Y069**
3. Retraction **Y023,** extension **Y024** of telescopic arm
4. Locking **Y016,** unlocking **Y017**
5. Solenoid valve for quickhitch lock **Y025**

Upper/lower rear additional control circuit

1. Raising **Y044** or lowering **Y045** tipper or raising **Y044** or lowering **Y045** auto hitch
2. Auto hitch tipper switch-over **Y046**

- Unlock auto hitch **Y047**

Touch button S131 – auto hitch in the keypad D005

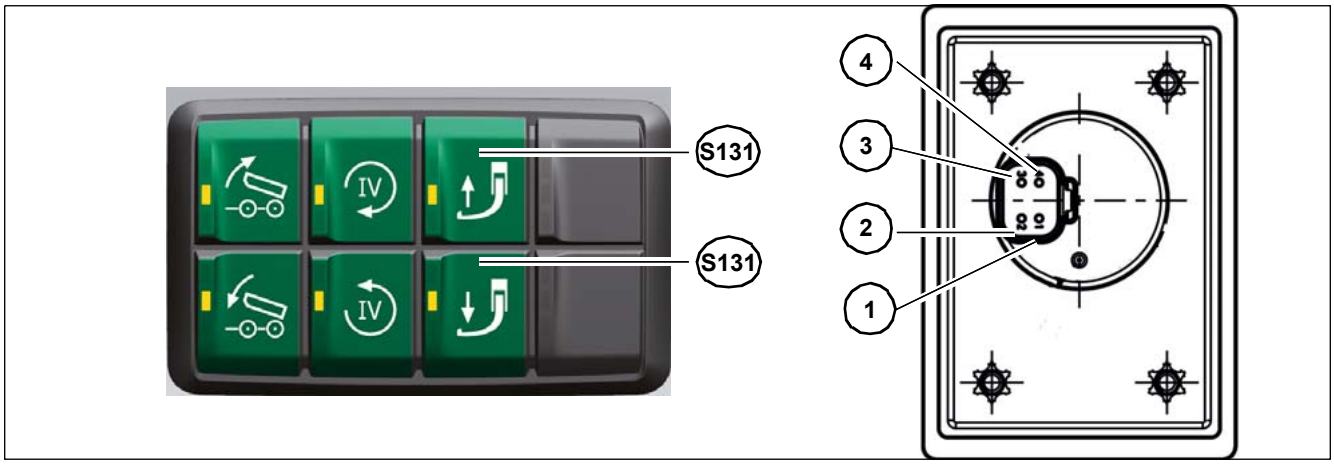

Pin assignment of keypad D005

PIN	Component	Measuring range
1	Voltage supply F032/5 A	12 V
2	Ground	Cabin
3	CAN 1	high
4	CAN 1	low

Function description

The auto hitch **092** is a hydraulically adjustable trailer coupling. A locking cylinder **093** secures against any readjustment in the retracted position. The retracted items are monitored by the sensor **S137** and are displayed in the display instrument. When the auto hitch **092** is actuated, the locking cylinder **093** opens independently. If the auto hitch **092** is not locked, it is only possible to drive in snail mode. The oil quantity can be set via the oil quantity adjustment **N023**. If the auto hitch is open and locked, this is displayed in the display instrument.

Raise auto hitch

With the auto hitch touch button **S131** on the keypad **D005** a CAN message (CAN1) is sent to controller **N004**. The proportional valve **Y033** is controlled via a PWM signal from the controller **N004** (PIN 1-83).

Lower auto hitch

In order to lower the auto hitch, two-hand operation is required. For the lower auto hitch function **092,** the quick coupling lock touch button **S040** and auto hitch touch button **131** must be pressed together in order to unlock the auto hitch **092**. Afterwards, button **S040** can be released. The signals from the touch button**S040** go to the controller **N004 (**PIN 1-17 and 1-41) the solenoid valve **Y047 is** energized in order to open the lock cylinder **093**. The proportional valve **Y034** is controlled via a PWM signal from the controller **N004** (PIN 1-86).

Sensor S137 – auto hitch

Pin assignment of sensor plate S137

PIN	Component	Measuring range
1	Signal to controller N004 XE15 (1-9)	12 V
2	Signal to controller N004 XE15 (1-33)	12 V
3	Ground	Chassis
4	Voltage supply F028/3A	12 V

Function description

Two sensors monitor the position of the lock pin and the trailer intake of the auto hitch. This ensures that the auto hitch is always open and unlocked. If one of the two sensors does not give a signal to the controller **N004**, the driving speed is limited to 7 km/h and will be displayed in the display instrument.

Overview: Autohitch 092

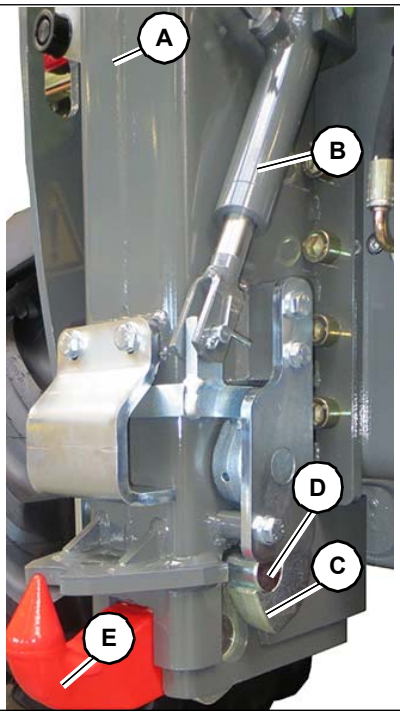

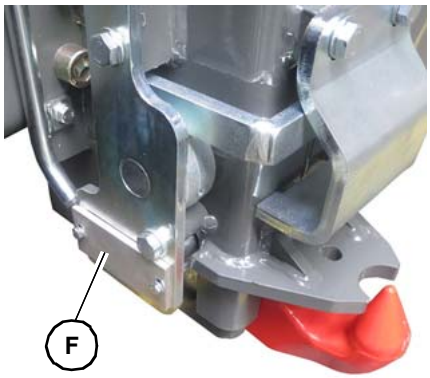

Pos.	Component
A	Dual-acting cylinder for the trailer coupling
B	Unlocking cylinder
C	Arrester hook with magnet
D	Pin with magnet
E	Trailer mount
F	Sensor plate with integrated sensor

8.12 Sensor plate adjustment

The goal of the setting is that for a completely raised auto hitch (trailer intake **A**) in the display **A** the symbol **1** will be displayed. The display **A** should only go out when the bolt of the auto hitch (trailer mount **A**) is located in the arrester hook **C**.

As long as the display **A**is illuminated with the symbol **1,** the driving speed is limited to snail mode.

In the display instrument, 4 conditions are displayed in field A.

1. Auto hitch not at top, locked
2. Raise auto hitch
3. Lower auto hitch

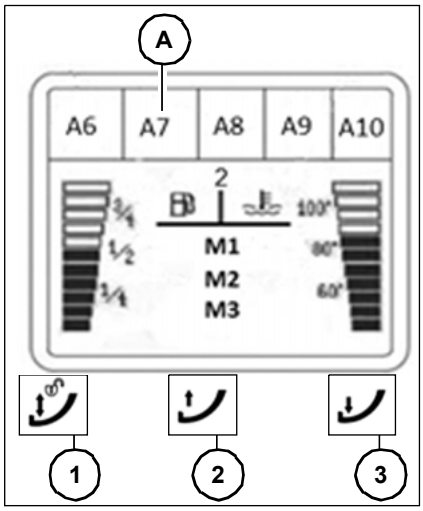

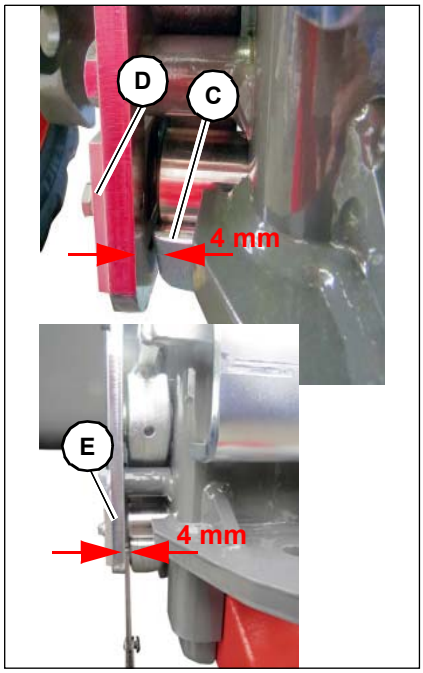

The distance between sensor plate D and the arrester hook C must be less than 5 mm.

1. With the feeler, determine the clearance between the counter bracket **E** and arrester hook **C**. The distance must be no more than **4 mm**

Information

The sensor is reset by **1 mm** to counter bracket **E**

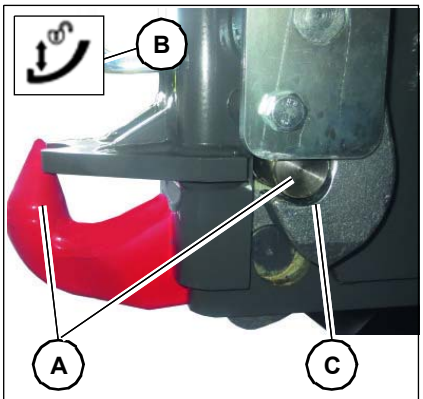

Fig. 1

2. Fully raise the Autohitch (trailer mount **A**)
➥ Display **B** is not displayed.
   ➥ Continue with Step 3.
➥ Display **B** is displayed.
   ➥ Lower the auto hitch into the arrester hook **C** with the tipper touch button; the display **B** must go out. If the display **B** does not go out**,** continue with step 3.

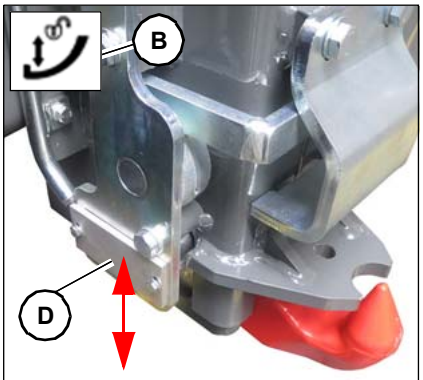

Fig. 2

3. Loosen sensor plate **D** using SW10
4. Push the sensor plate **D** up or down until the display**B** illuminates.
   ➥ Make sure that the sensor plate **C** is mounted horizontally
5. Screw down sensor plate **D** using SW10.

A functional check must be carried out

Sensor plate cannot be adjusted

If the sensor plate **D** cannot be adjusted by moving it, the distance from the sensor plate **D** to the arrester hook **C** must be checked and adjusted.

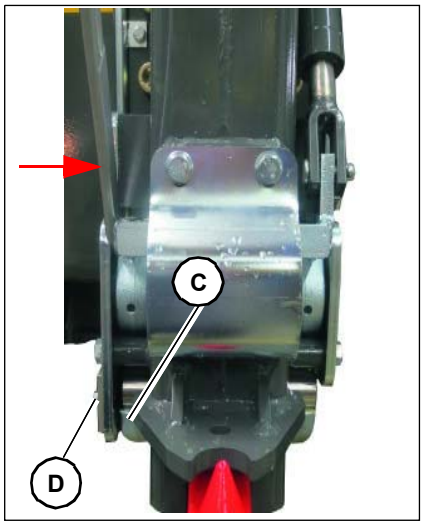

1. Push the arrester hook **C** all the way to the right with a lever

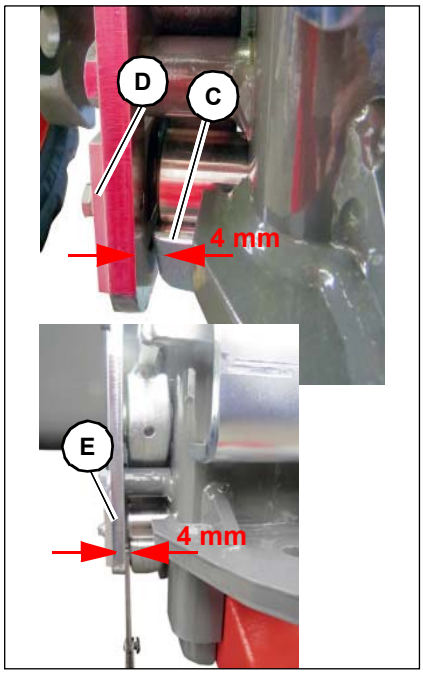

The distance between sensor plate D and the arrester hook C must be less than 5 mm.

2. With the feeler, determine the clearance between the counter bracket **E** and arrester hook **C**. The distance must be no more than **4 mm**

Information

The sensor is reset by **1 mm** to counter bracket **E**

➥ If the distance is greater than**4 mm**, a washer must be placed on the opposite side

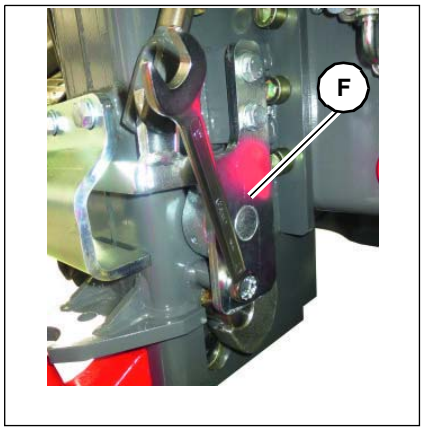

3. Remove counter bracket **F** (SW19).

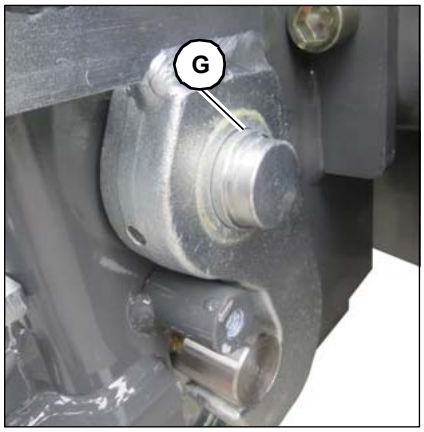

➥ The washer **H** is placed on the large diameter **G** 35 mm

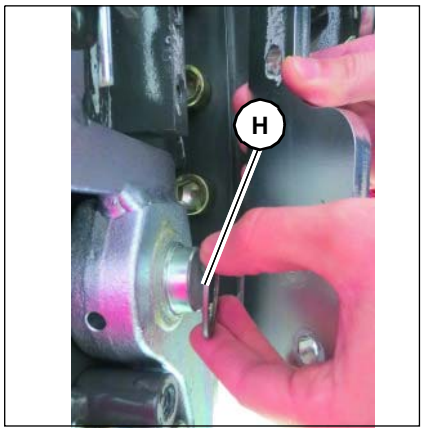

4. Arrange washer **H**

Outer diameter 45 mm, inner diameter 35 mm, thickness 2 mm

5. Mount counter holder **F** using AF19
6. Check the dimension between counter holder **E** and arrester hook **C** with the feeler gauge
7. Repeat adjustment of the sensor plate **D**

A functional check must be carried out

8.13 Overload limiter (SMART HANDLING)

Overview: overload limiter (SMART HANDLING)

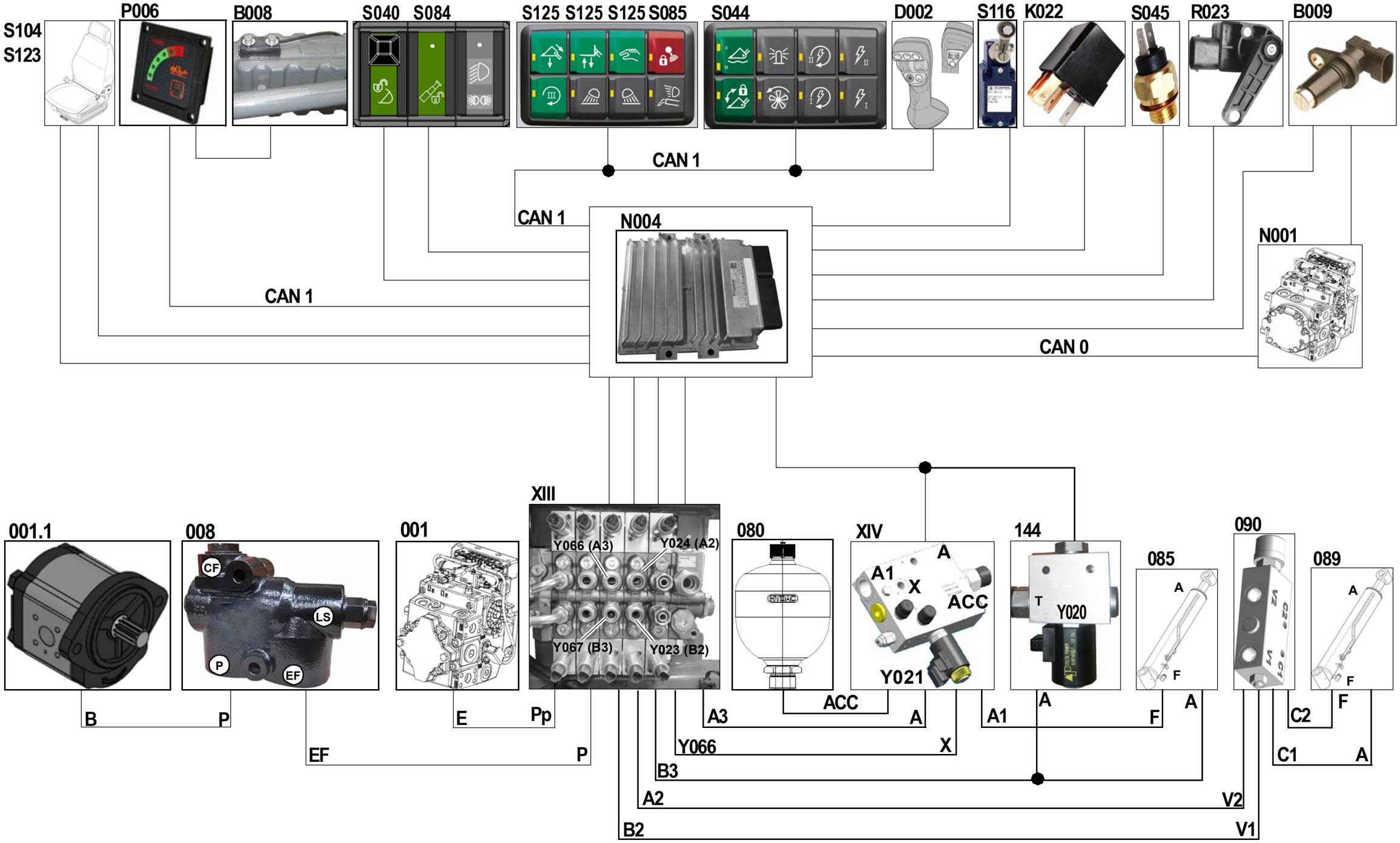

Description of telescopic arm (SMART HANDLING)

Pos.	Component	Remarks
XIII	Main control unit (hydraulics)	HDS24
XIV	Hose burst valve with load stabiliser	–
001	Boost pump	12 ccm/U (0.732 in³)
001.1	Constant pump work hydraulics	36 ccm/U (2.196 in³)
008	Priority valve	–
080	Pressure accumulator	330 bar (4786.25 psi)
085	Lift cylinder	–
089	Push-out cylinder	–
090	Hose burst valve for push-out ram	–
144	Connecting valve to tank (load stabiliser on rod side of lift cylinder de-pressurized)	–
B008	Load sensor – strain gage	–
B009	Speed sensor	5 V
D002	Joystick	CAN 1
K022	Switching relay, load stabiliser	12 V
N001	Drive electronics	H1 AC control
N004	Controller	HY-TTC 580-CP
P006	Safe load indicator	–
R023	Boom angle sensor	5 V
S040	Touch button for unlocking emergency lowering	5 V
S044	Load stabiliser button	CAN 1
S045	Load stabiliser pressure switch	–
S084	Hydraulics cut-off tip switch	CAN 1
S085	Button for long-haul travel lock	CAN 1
S104	Operator presence switch	–
S116	Limit switch 1 (telescopic boom fully retracted)	–
S123	Seat belt contact switch	–
S125	Lowering mode switch	CAN 1
Y020	Load stabiliser solenoid valve	5,7 Ω
Y021	Load stabiliser solenoid valve	6,5 Ω
Y023	Proportional valve (retract)	4,7 Ω
Y024	Proportional valve (extend)	4,7 Ω
Y066	Proportional valve (raise)	4,7 Ω
Y067	Proportional valve (lower)	4,7 Ω

Pos.	Component	Designation
CAN1	CAN1 – Work hydraulics	–
CAN0	CAN0 – Drive	–

Hydraulic control unit XIII

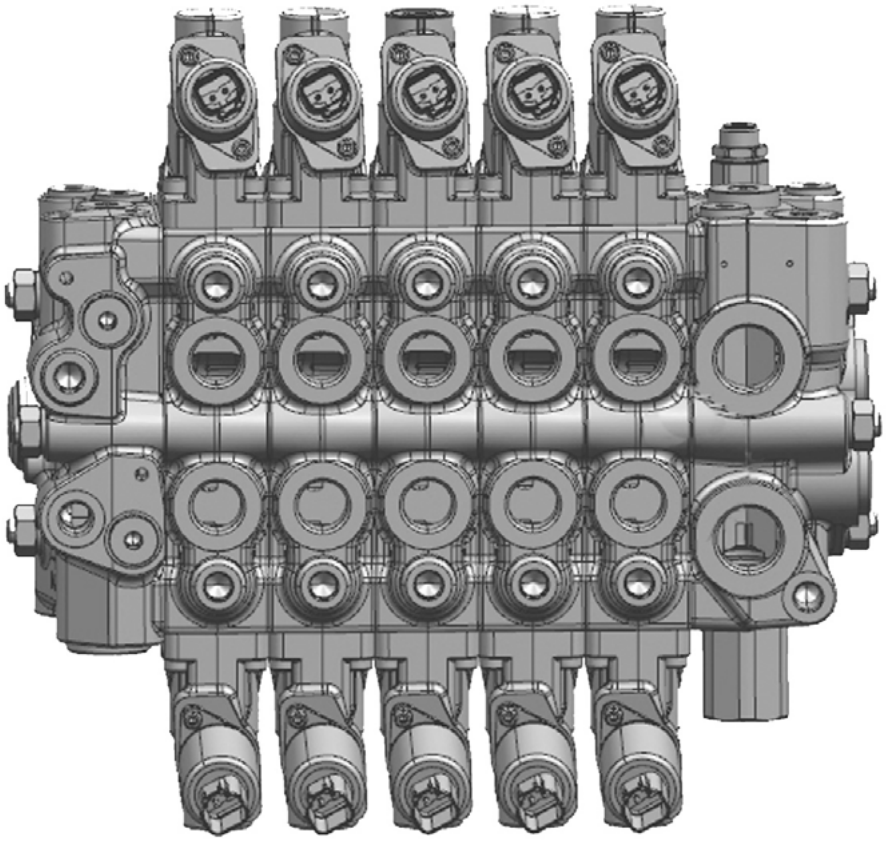

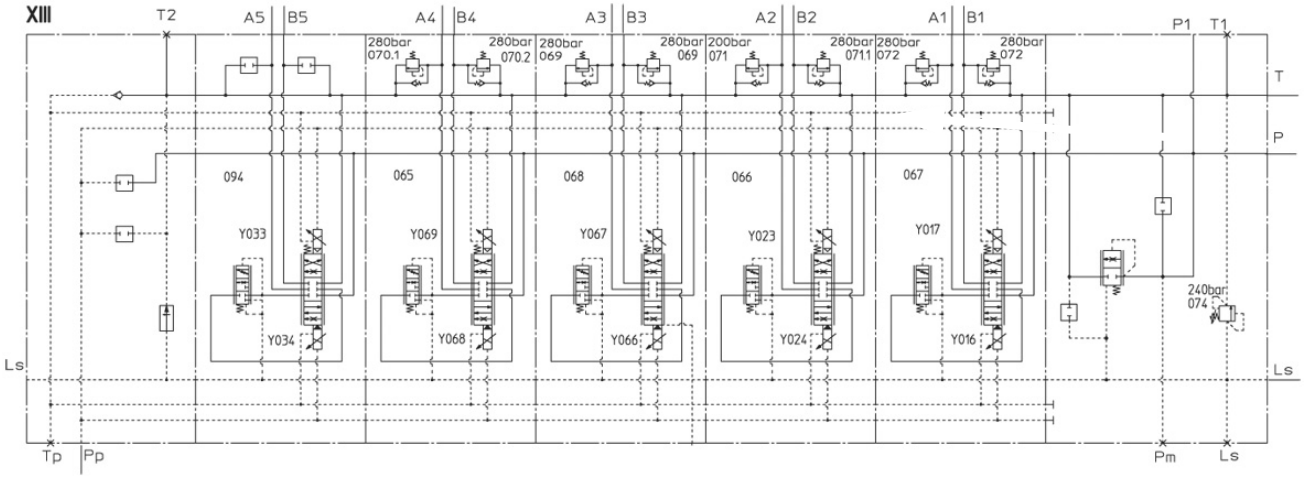

Hydraulic control unit XIII

Hydraulic control units **XIII** from 4 to 5 sections will be used. Section 5 does not have a secondary valve.

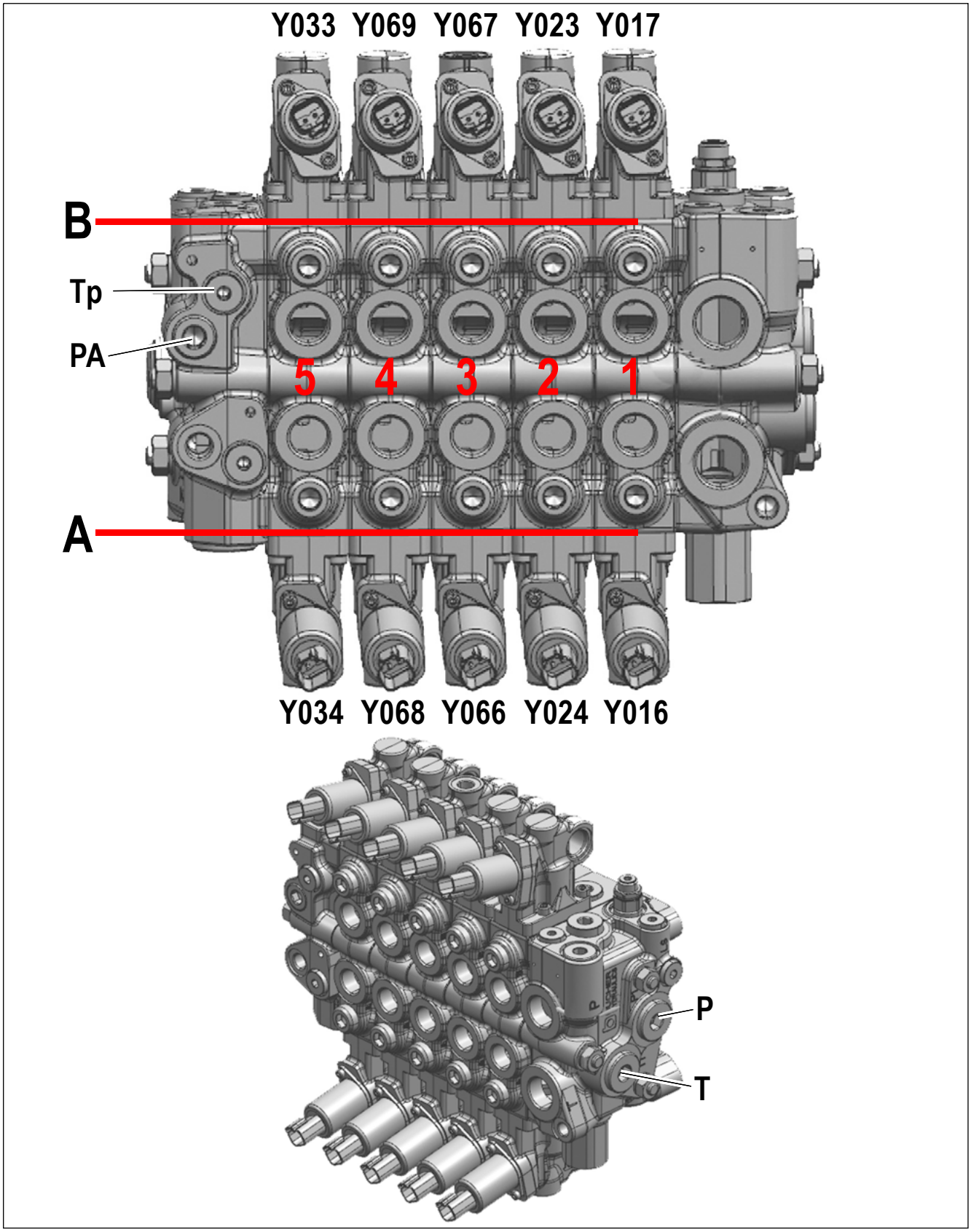

Description: control unit XIII

Pos.	Component	Remarks
A	Port designation on control valve XIII	Section 1–5 bottom side
B	Port designation on control valve XIII	Section 1–5 rod side
P	Work hydraulics pump I	36 ccm/U (2.196 in³)
PA	Pilot control (boost pressure)	Approx. 30 bar (435.10 psi)
T	Tank recirculation via the return filter	–
Tp	Tank venting for the pilot caps	–
Y016	Lock proportional valve (Section 1)	PWM 4.7 Ω
Y017	Unlock proportional valve (Section 1)	PWM 4.7 Ω
Y023	Retract proportional valve (Section 2)	PWM 4.7 Ω
Y024	Extend proportional valve (Section 2)	PWM 4.7 Ω
Y033	Proportional valve additional circuit (Section 5)	PWM 4.7 Ω
Y034	Proportional valve additional circuit (Section 5)	PWM 4.7 Ω
Y066	Raise proportional valve (Section 3)	PWM 4.7 Ω
Y067	Lower proportional valve (Section 3)	PWM 4.7 Ω
Y068	Tilt back proportional valve (Section 4)	PWM 4.7 Ω
Y069	Tip out proportional valve (Section 4)	PWM 4.7 Ω

Valves from hydraulic control unit XIII

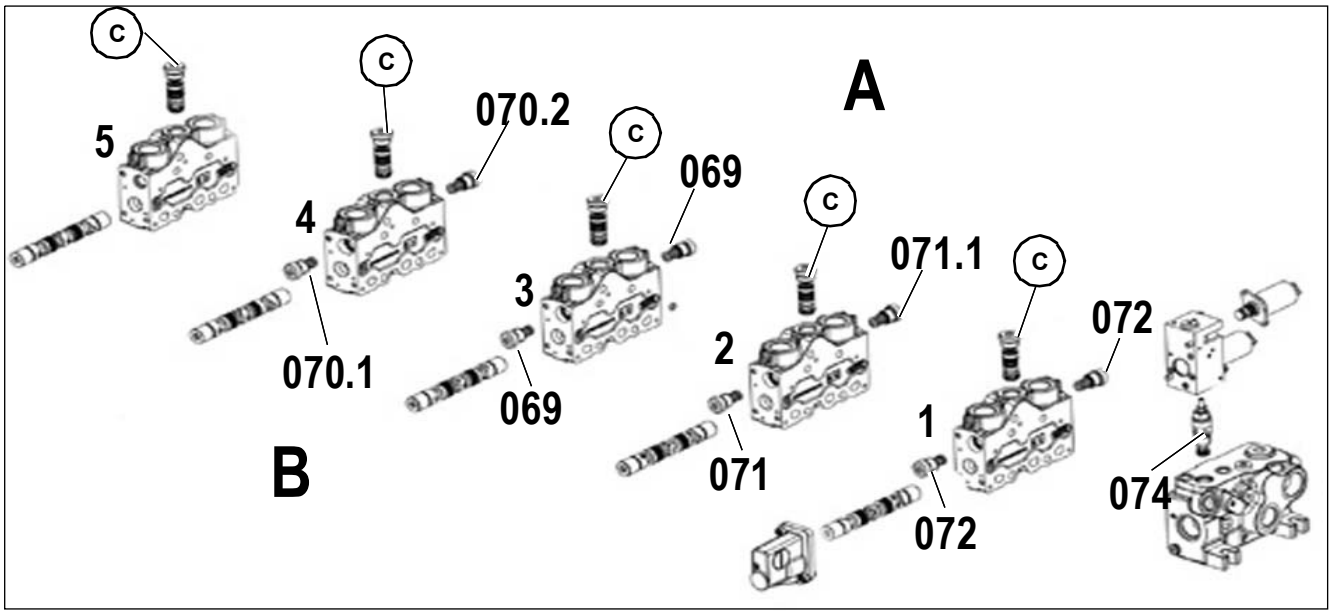

Description: control unit XIII

Pos.	Component	Remarks
1	3rd control circuit section 067	80 l/min (21.10 US gpm)
2	Push-out ram section 066	A2 – 100 l/min (26.4 US gpm) B2 – 80 l/min (21.10 US gpm)
3	Lift ram section 068	100 l/min (26.4 US gpm)
4	Tilt ram section 065	A4 – 100 l/min (26.4 US gpm) B4 – 80 l/min (21.10 US gpm)
5	Section rear additional control circuit Hitch/Tipper 094	80 l/min (21.10 US gpm)
A	Port designation on control valve XIII	Section 1–5 bottom side
B	Port designation on control valve XIII	Section 1–5 rod side
C	Pressure compensators	–
069	Secondary valve for raise lifting cylinder (B)	270–290 bar (3916–4206 psi)
069	Secondary valve for lower lifting cylinder (A)	270–290 bar (3916–4206 psi)
070.1	Secondary valve for tipping cylinder rod side fill shovel (A)	270–290 bar (3916–4206 psi)
070.2	Secondary valve for tipping cylinder bottom side empty shovel (B4)	270–290 bar (3916–4206 psi)
071	Secondary valve for push-out ram Extend bottom side (B)	190–210 bar (2755–3045 psi)
071.1	Secondary valve for push-out ram Retract rod side (A)	270–290 bar (3916–4206 psi)
072	Secondary valve 3rd control circuit, lock/unlock (A/B)	270–290 bar (3916–4206 psi)
074	LS pressure relief valve	240 bar (3480.91 psi)

Gear pump working hydraulics I

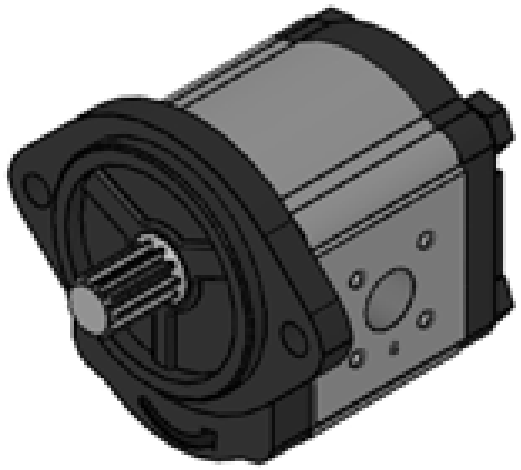

Component	Remarks	System pressure
I	36 ccm/U (2.196 in³)	230–250 bar (2320.6 – 2755.72 psi)

Function description

The gear pump for working hydraulics **I** supplies the steering orbitrol **IV** and the main control unit **XIII** with oil via the priority valve **008**. The oil flow is filtered by a high-pressure filter **167**directly after the gear pump **I**.

Priority valve 008

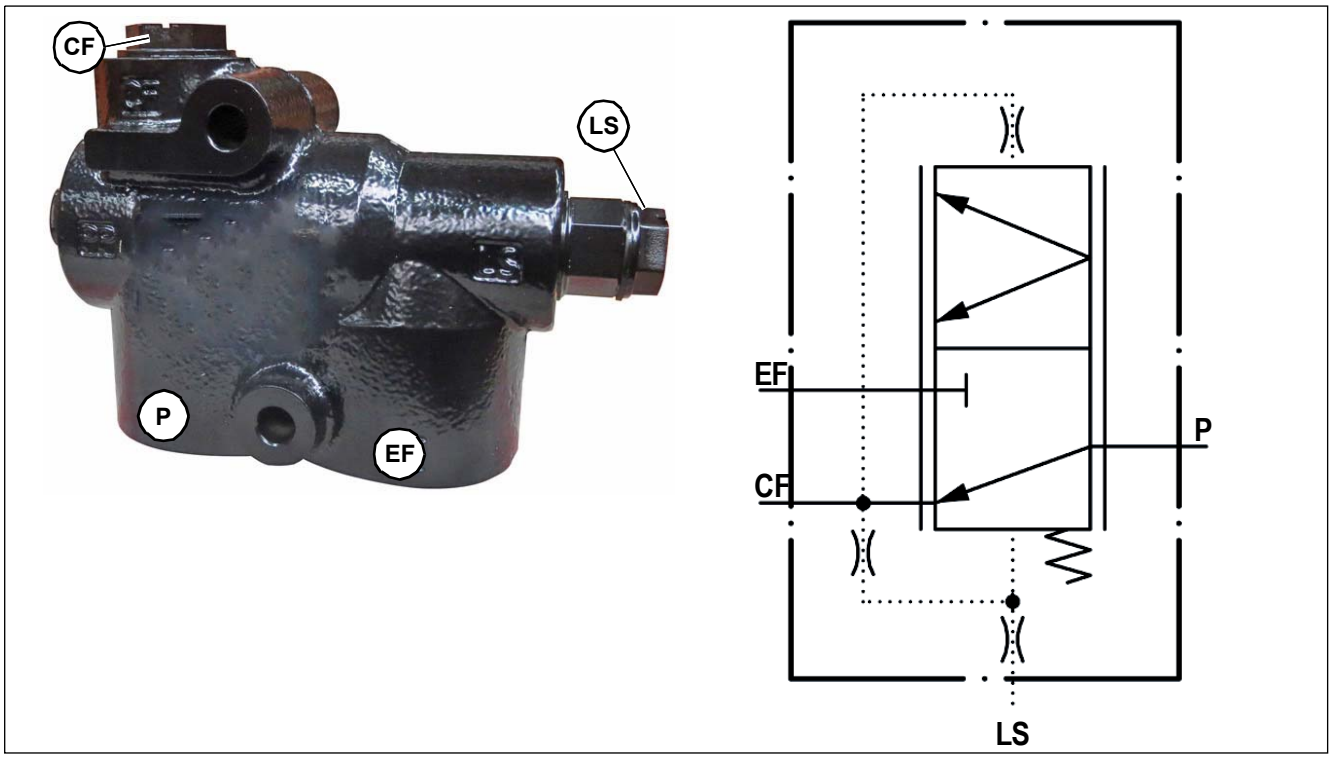

Connection	Power supply
P	Input from gear pump, working hydraulics **I**
LS	Input from steering orbitrol **IV**, port **LS**
CF	Output to steering orbitrol **IV**, port **P**
EF	Output to main control unit **XIII**, port **P1**

Function description

The priority valve **008** is responsible for dividing the oil flow from the gear pump work hydraulics **I into** the steering system and work hydraulics. Here, the oil is primarily supplied to the steering system **IV**.

Function

The oil flow coming from the gear pump **I** passes through port **P** and an internal duct of the priority valve **008** to the control spool. The control spool is then pushed against the spring via the area ratio and the oil flow is distributed evenly between the steering orbitrol **IV** and the main control unit **XIII**..

As soon as the steering orbitrol **IV** is actuated it generates an LS signal, which acts on the control spool of the priority valve **008**. Through the combination of the spring force and the LS signal the control spool is pushed back towards the initial position and the steering assumes priority. This can mean that functions of the working hydraulics are executed more slowly during steering.

Pressure accumulator 080

Important information

Membrane and hydraulic accumulators are pressure tanks in accordance with the European Pressure Equipment Directive 97/23/EC. Hydraulic accumulators are exclusively for the purpose of accumulating and discharging hydraulic fluids. Membrane or hydraulic accumulators consist of a fluid and a gas section with a membrane as gas-tight separating element.

DANGER

If the pressure accumulator is not filled correctly there is a risk of explosion! If pressure accumulators are filled with oxygen or air, they can explode!

This can result in serious injuries or even death.

► Only fill pressure accumulators with nitrogen.

Information

No welding or mechanical work may be carried out on the pressure accumulator!

We recommend checking the pretensioning pressure annually. This inspection may only be carried out by a skilled person with the respective qualification!

Component	Function	Remarks
080	Load stabiliser pressure accumulator	Gas filling pressure 35 bar (507,63 psi)

Function description

The pressure accumulator **080** is connected to the load stabiliser **XIV** via port **ACC**. The pressure accumulator **080** is activated via the load stabiliser solenoid valve **Y021**.

If the load stabiliser solenoid valve **Y021** is energized by controller **N004**, the bottom side of the lift cylinder **085** is connected with the pressure reservoir **080**.

Hose burst valve with load stabiliser XIV

DANGER

No adjustments may be made to any hose burst valves.

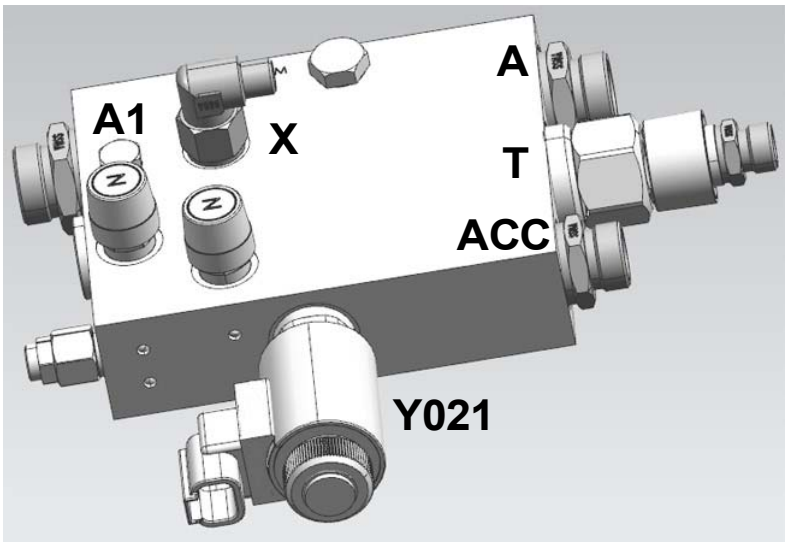

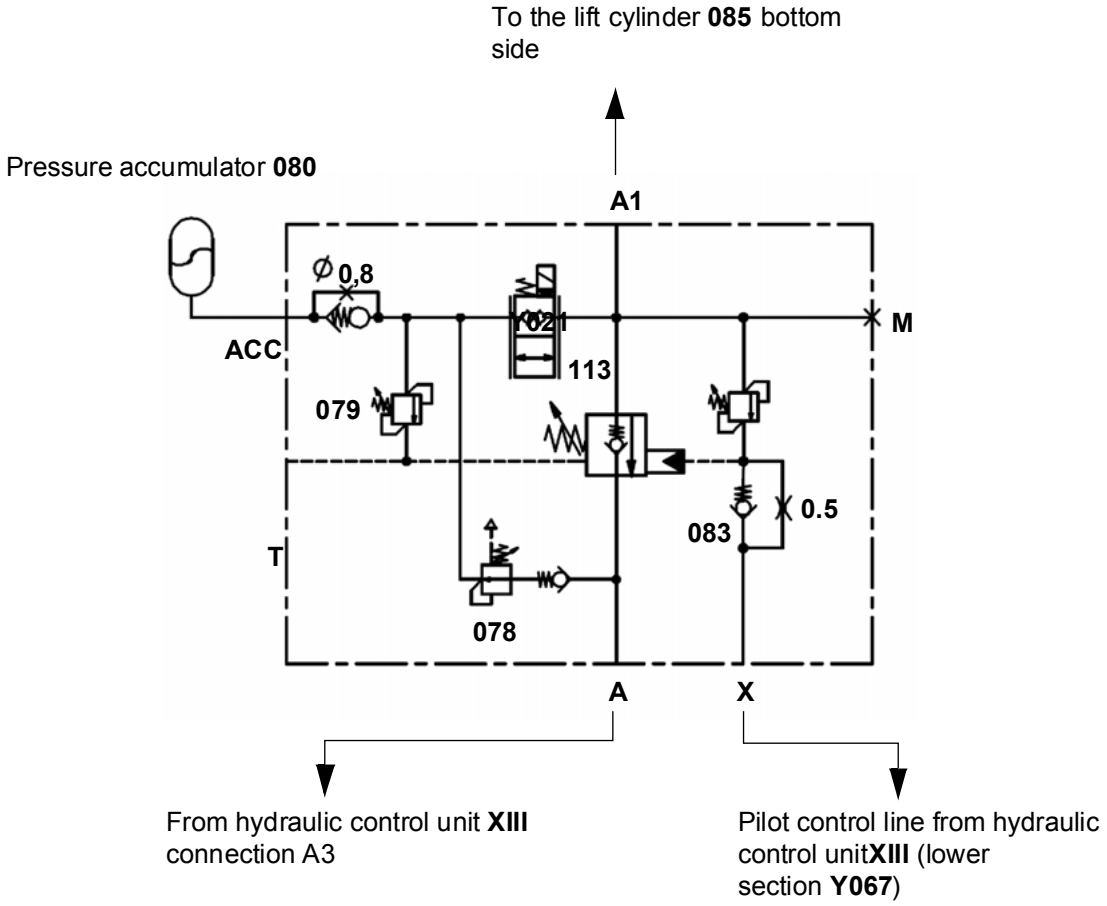

Description: hose burst valve with load stabiliser XIV

Connection	Power supply
A	Input from hydraulic control unit **XIII** A3
A1	Output from lifting cylinder **085** (bottom side)
ACC	Input pressure accumulator **080**
X	Input of the hydraulic control unit **XIII** (lower section **Y067**) pilot control
M	Locked
T	Output to tank **XX**

Component	Function
078	Pre-load valve 110 bar (1595.42 psi)
079	Pressure relief valve 280 bar (4061 psi)
083	Non-return valve
113	Valve for connecting a piston-type accumulator 080 with the bottom side of the lift cylinder **085**

Component	Function	Remarks
Y021	Solenoid valve for load stabiliser is energized when the load stabiliser is switched on.	12 Volt 5.4 Ω

Functional description: hose burst valve with load stabiliser XIV

Valve **XIV** covers on the one hand the hose burst valve function at lifting cylinder **085** and on the other it is activated for the boom via switch **S044**. The hose burst valve prevents the boom from falling down in the event of a break in the line on the bottom side of lifting cylinder **085**. In addition, the load stabiliser is switched on with solenoid valve **Y021**.

Hose burst valve function

When raising the boom, the volume flow coming from control unit **XIII** (connection A3)) can flow to connection A at valve **XIV** via a non-return valve to the floor side of the lifting cylinder **085** . To lower the boom, a volume flow rate from the bottom side of lifting cylinder **085** has to flow back to control unit **XIII**. This flow direction is initially blocked by the non-return valve in valve **XIV**. In an intentional lowering of the boom, the pilot control pressure for lowering is conveyed to connection X in valve **XIV**. This controls the non-return valve **083**, and the volume flow from **A1** to **A** is released, thereby lowering the telescopic arm. In addition, a secondary valve also releases this flow direction in the event of an external load that is too heavy or a shock load.

Load stabiliser

The load stabiliser is activated via switch **S044**. Solenoid valve **Y021** is supplied with power in order for it to be activated. This opens valve **113** and releases the line between the floor side of the lifting cylinder **085** and the pressure accumulator **080**. When the valve **113** is closed, the floor side of the lifting cylinder **085** is separated from the pressure accumulator **080** and the load stabiliser is deactivated. The pressure reservoir **080** is preloaded with a pressure of 110 bar (1595.42 psi). This means that the boom can no longer be lowered. Via the pressure release valve **078**, a volume flow can flow from connection **A** into the lift cylinder until the pressure of 110 bar (1595.42 psi) has been reached. The pressure relief valve **079** relieves the pressure from the pressure reservoir **080** by up to 280 bar (4061 psi). In particular, when valve **113,** is close, a pressure overload caused by a temperature rise of the pressure reservoir **080** is regulated and discharged by connection **T** to the tank **XX**. In order to avoid accidental lowering of the boom should the hydraulic line between valve **XIV** and pressure accumulator **080** break, additional protection is provided for at connection **ACC**. The non-return valve (additional protection) which closes if the volume flow to the pressure accumulator **080** is too great, prevents the boom from falling.

Hose burst valve for push-out ram 090

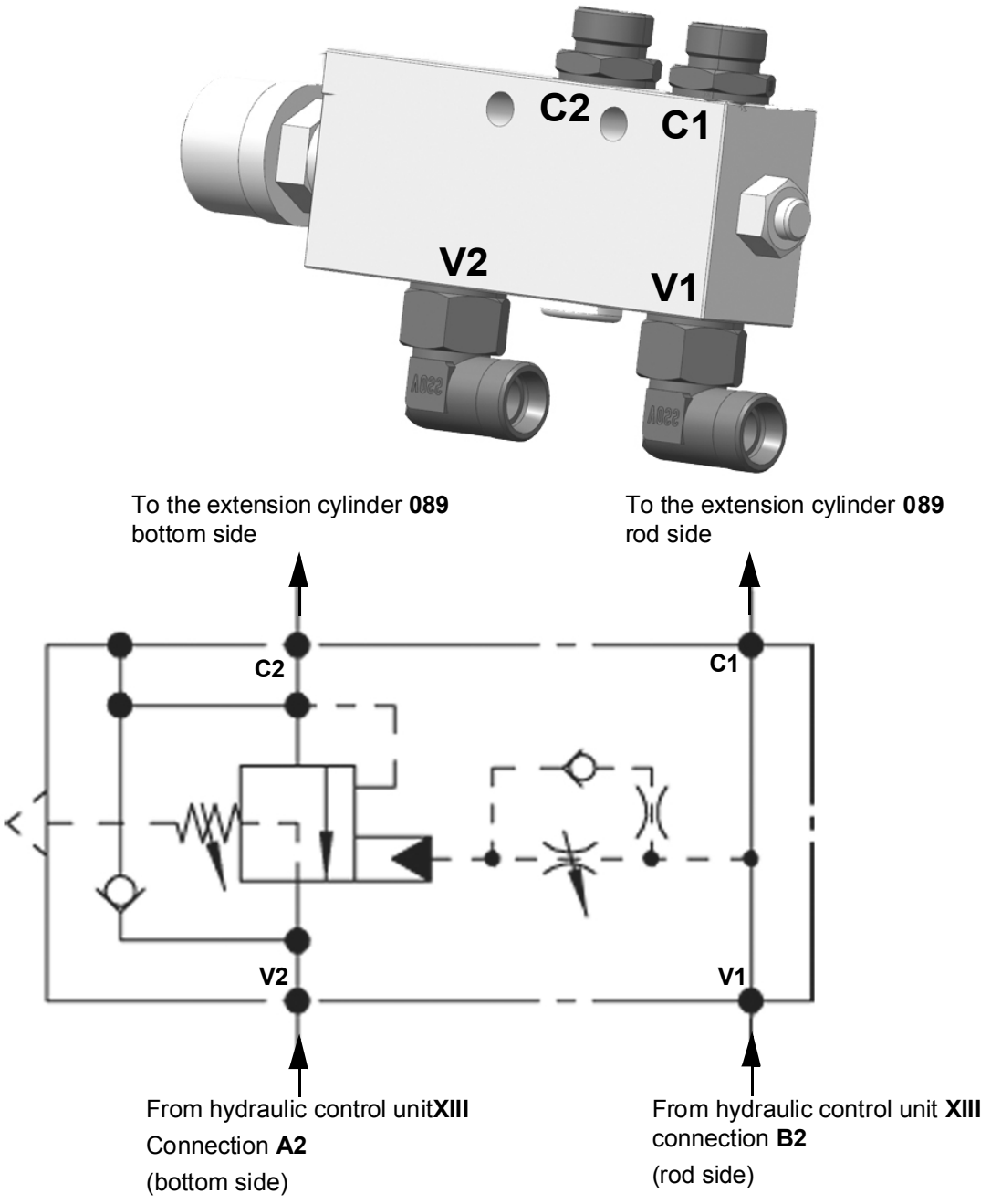

Connection	Power supply
C1	Output to push-out ram **089** (rod side)
C2	Output to push-out ram **089** (bottom side)
V1	Input from hydraulic control unit **XIII** (B2)
V2	Input from hydraulic control unit **XIII** (A2)

Functional characteristics: hose burst valve for extension cylinder 090

Valve **090** covers the hose burst valve function at the push-out ram **089**. The hose burst valve prevents the load from being retracted in the event of a break in the line on the bottom side of the push-out ram **089**.

Function

When the telescopic arm is extended, the volume flow coming from the control unit **XIII** (connection **A2**) from connection **A** to **A1** in valve **090** can flow via the non-return valve. To tilt in the boom a volume flow must be enabled from the bottom side of the push-out ram **089** back to control unit **XIII**, this flow direction is initially blocked by the non-return valve in valve **090**. In an intentional retraction manoeuvre, the pressure on the rod side of the push-out ram **089** opens the valve. The control pressure for the opening process is applied by a throttle and dissipated via a non-return valve in order to reduce vibrations.

A secondary valve is additional integrated into valve **090**. In the event of external loads that are too heavy or a shock load that would cause too high a pressure being exerted on the bottom side of push-out ram **089**, the hose burst valve is also opened until the peak pressure has dissipated.

Relief valve for load stabiliser 144 (Y020)

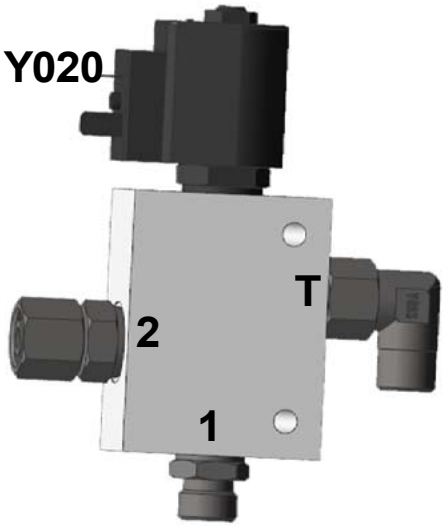

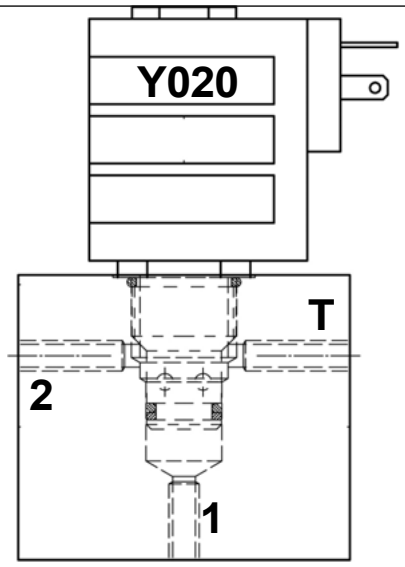

From the lift cylinder **085** (rod side connection)

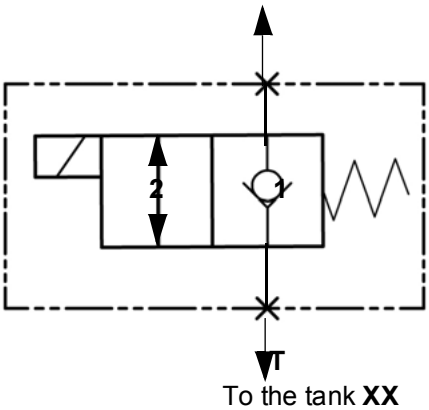

To the tank **XX**

Connection	Power supply
1	From lifting cylinder **085** (rod side)
2	Solenoid valve **Y020** energized with lift cylinder 085 (rod side) connected
T	Connection to the tank
Y020	Solenoid valve, load stabiliser **Y020**

Function description

The solenoid valve **Y020** is supplied with voltage by the load stabiliser switch **S044**. When the machine is at standstill, solenoid valve **Y020** is not energised. It establishes a connection between lifting cylinder **085** (rod side) and tank **XX**. This enables the boom to move upwards freely.

Load sensor – strain gauge B008

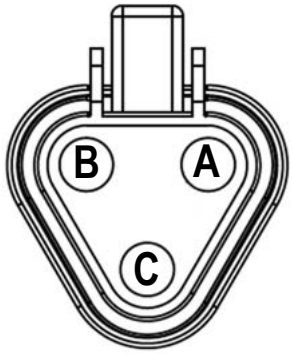

PIN	Component	to PIN	Measuring range
A	To the overload display P006 (Sensor 1)	P006 (4)	30–80 mA
B	To the overload display P006	P006 (5)	30–80 mA
C	To the overload display P006 (Sensor 2)	P006 (5)	30–80 mA

Function description

The strain gauge is a measuring instrument for measuring elongation and compression strain on the rear axle. It changes the electrical resistance even if only slight deformation is present. Metal strain gauges are based on changes in resistance due to changes in length or cross-section. When a strain gauge is stretched, its resistance increases. When it is compressed (negative strain), its resistance decreases. The integrated strain gauge can determine a displacement of 5 µm.

The integrated electronics can measure in a range between 30 mA and 70 mA.

Speed sensor B009, variable displacement motor

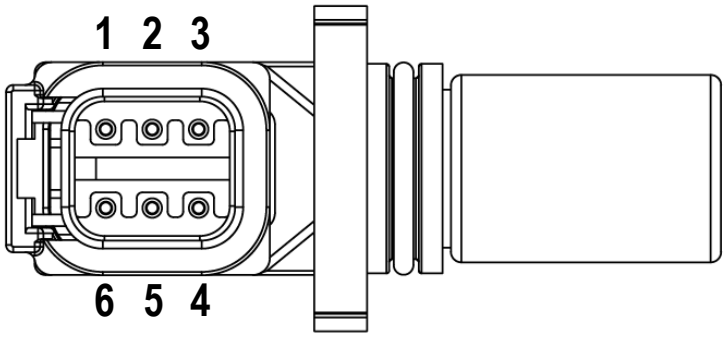

PIN	Connection	to PIN	Measuring range
1	Output to traction electronics **N001**	CC1 (5)	Signal 2 frequency
2	Output to traction electronics **N001**	CC2 (4)	Direction of rotation signal (0 – 5 V)
3	Output to traction electronics **N004**	XE15 (1-50)	Signal 1 speed (5 V)
4	Input from traction electronics **N001**	CC1 (8)	5 V
5	Input from traction electronics **N001**	CC1 (9)	Sensor ground
6	–	–	–

Function description

The speed sensor **B009** takes up the revolutions on the drive shaft in the variable displacement motor. The drive electronics **N001** process the signal for speed display, speed limiter, and load stabiliser.

Joystick D002

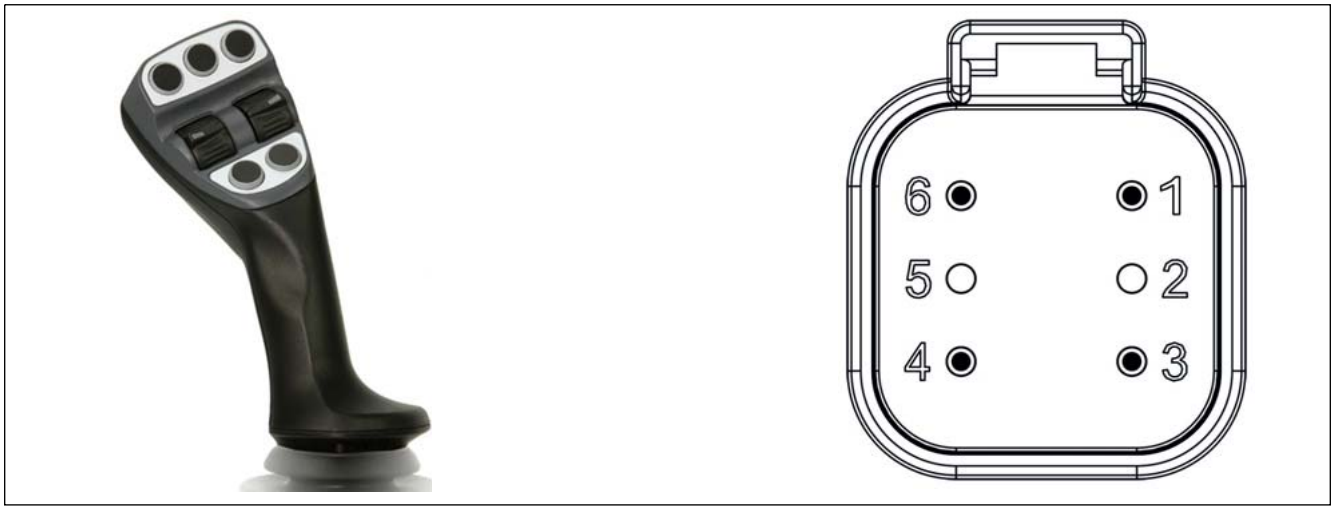

Pin assignment of Joystick D002

PIN	Connection	Measuring range
1	Ground (KL31)	Ground/cab
2	Voltage supply F032/5 A (KL30)	12 V
3	Switched on voltage supply (KL15)	12 V
4	–	–
5	CAN 1	low
6	CAN 1	high

Description of joystick D002 (version 1)

Functional characteristics of joystick (handle)

The joystick is used to operate the loader unit as well as various additional functions.

The loader unit can only be completely operated by the control lever if:

1. the seat contact switch is actuated (operator in the seat)
2. Starter ON
3. the diesel engine is on
4. Lock for long-haul travel**S085** off

Front side of joystick D002

Pos.	Component	Function
A	Tip switch **S066**	The drive is deactivated (neutral)
B	Roller **S034/035**	Forward/reverse travel
C	Tip switch **S135**	Reduce speed level e.g. from hare to turtle
D	Tip switch **S136**	Increase speed level e.g. from turtle to hare
E	Tip switch **S110**	Reversing valve (front telescopic arm)
F	Roller **S038/039**	Extend/retract telescopic arm
G	Tip switch **S092**	Bucket repositioning

Reverse of joystick D002

Pos.	Component	Function
H	Roller **S030/031**	Unlock/lock third control circuit
I	Tip switch **S025**	Differential lock (**Y009**)

Description of joystick D002 (version 2)

Functional characteristics of joystick (handle)

The joystick is used to operate the loader unit as well as various additional functions.

The loader unit can only be completely operated by the control lever if:

1. the seat contact switch is actuated (operator in the seat)
2. Starter ON
3. the diesel engine is on
4. Lock for long-haul travel**S085** off

Front side of joystick D002

Pos.	Component	Function
A	Tip switch **S109**	Operation of electric circuit 1 of the 7-pole Front power outlet
B	Roller **S034/035**	Forward/reverse drive and neutral
C	Tip switch **S135**	Reduce speed level e.g. from hare to turtle
D	Tip switch **S136**	Increase speed level e.g. from turtle to hare
E	Tip switch **S110**	Reversing valve (front telescopic arm)
F	Roller **S038/039**	Extend/retract telescopic arm
G	Tip switch **S092**	Bucket repositioning

Reverse of joystick D002

Pos.	Component	Function
H	Roller **S030/031**	Unlock/lock third control circuit
I	Tip switch **S025**	Differential lock (**Y009**)

Angle or rotational sensor R023

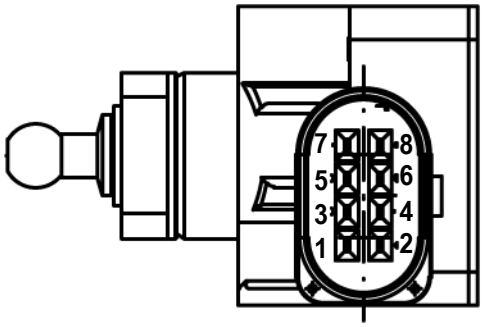

PIN	Connection	to PIN	Measuring range
1	Input from controller N004	XE04 (2-47)	5 V
2	Output to controller N004	XE15 (1-05)	Signal 1 (4.5 – 0.5 V)
3	–	–	–
4	Input from controller N004	XE04 (2-34)	5 V
5	Output to controller N004	XE15 (1-29)	Signal 2 (0.5 – 4.5 V)
6	–	–	–
7	Input to controller N004	XE04 (2-30)	Ground
8	Input to controller N004	XE04 (2-17)	Ground

Function description

The lifting arm monitoring potentiometer **R023** and the strain gauge strips load sensor **B008** determine the load limit via a tube characteristic in order to prevent an overload.

The boom monitoring potentiometer is needed for limit position damping. The speed of the telescopic arm is reduced via the tube characteristic within a range of 3-6° in front of the end stop.

If the boom is moved without a command from the joystick **D002**, the boom angle sensor **R023** detects a change. This triggers an error message in the display **P011**.

The working range is 0–66°, the calibration for a completely lowered telescopic arm.

Voltage values for 0°

- Signal 1 = 2.127 V
- Signal 2 = 2.855 V

Voltage values for 66°

- Signal 1 = 4.200 V
- Signal 2 = 0.770 V

Touch button S040 - quick hitch system lock

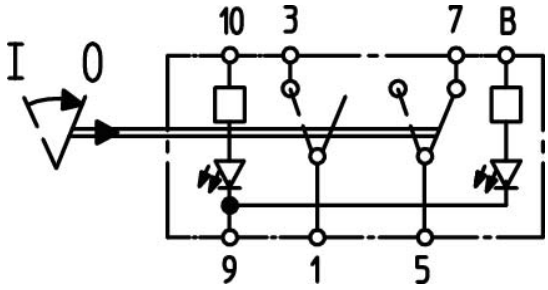

PIN	Connection	to PIN	Measuring range	
			not actuated	Actuated
1	Output to controller N004	XE15 (1-17)	0 V	5 V
3	Input from controller N004	XE04 (2-21)	5 V	5 V
5	Output to controller N004	XE15 (1-41)	5 V	0 V
7	Input from controller N004	XE04 (2-21)	5 V	5 V
9	Lighting ground (cab)	–	–	–
10	Board voltage lighting F018/10 A	–	12 V	12 V
B	Lighting for control	–	0 V	5 V

Function description

With the touch button **S040** quick coupler system lock, the functions quick coupler system unlock **Y025,** emergency lowering via lowering **Y067** and auto hitch lock **Y047** are controlled. In order to be able to use the touch button **S040**, the operator must be in the seat.

Touch button S044 – load stabiliser in the keypad D004

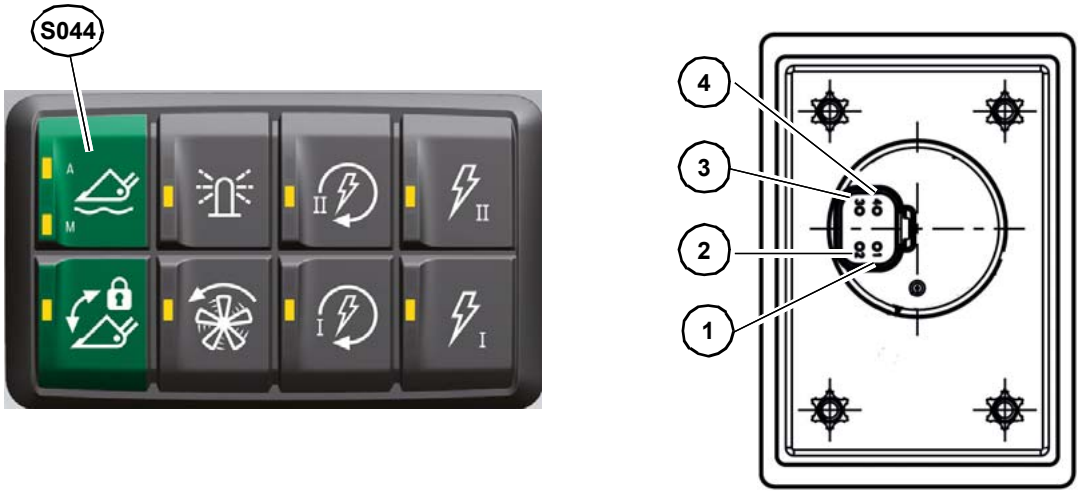

PIN	Connection	Measuring range
1	Voltage supply F032/5 A	12 V
2	Ground	Cabin
3	CAN 1	high
4	CAN 1	low

Function description

The load stabiliser can be switched of via the touch button **S044** in either continuous or automatic function. The load stabiliser is used to damp the boom in order to ensure smooth handling even at high speeds. If the function is active, the touch button **S044** lights up.

Continuous function is switched on

With the touch button **S044** on the keypad **D004** a CAN message (CAN1) is sent to controller **N004**. From controller **N004**, the solenoids **Y020**/ **Y021** are energized with 12 V.

The PIN 1-77 outlet on the controller **N004** energizes the solenoid **Y020** (2)

The PIN 1-56 outlet on the controller **N004** energizes the solenoid **Y021** (2)

Automatic function

The load stabiliser is activated from a speed of 7 km/h.

The signal from the speed sensor **B009** is sent from the traction electronics **N001** to the controller **N004** via CAN 0. From 7 km/h, solenoids **Y020 Y021**are supplied with 12 V by the controller **N004**.

The PIN 1-77 outlet on the controller **N004** energizes the solenoid **Y020** (2).

The PIN 1-56 outlet on the controller **N004** energizes the solenoid **Y021** (2).

Load stabiliser pressure switch S045

Switching off of load stabiliser when filling shovel

The load stabiliser is automatically switched on when a pressure of 150 bar (2175.6 psi) is applied to pressure switch **S045**. The pressure switch **S045** is built into the working ling of tipping cylinder **087** (A4 bottom side).

The reason for switching off

For the parallel guidance of the attachment tools, the tipping cylinder **087** is directly connected with the compensating cylinder **086**. In other words, the oil that is displaced by the lifting movements (raising/lowering) on the compensating cylinder **086** ends up in the tipping cylinder **087**.

If the load stabiliser is switched on, the lift cylinder **085** (A3 bottom side) is connected with the pressure reservoir **080**. The (B3 rod side) of the lift cylinder **085** with the tank **XX**. If the tipping cylinder **087** is tipped against the detent, the compensating cylinder **086** is simultaneously loaded with pressure on the bottom side. The compensating cylinder **086** can now lift the loader unit because the lift cylinder **085** on the (B3 rod side) is connected to the tank **XX**. In order to prevent this, for a pressure of 150 bar (2175.6 psi) at the tipping cylinder **087** (A4 bottom side) via the pressure switch **S045**, the load stabiliser is switched off. The lift cylinder **085** is thus locked again, and lifting by tipping is no longer possible.

Touch button S084 - hydraulic shut-down

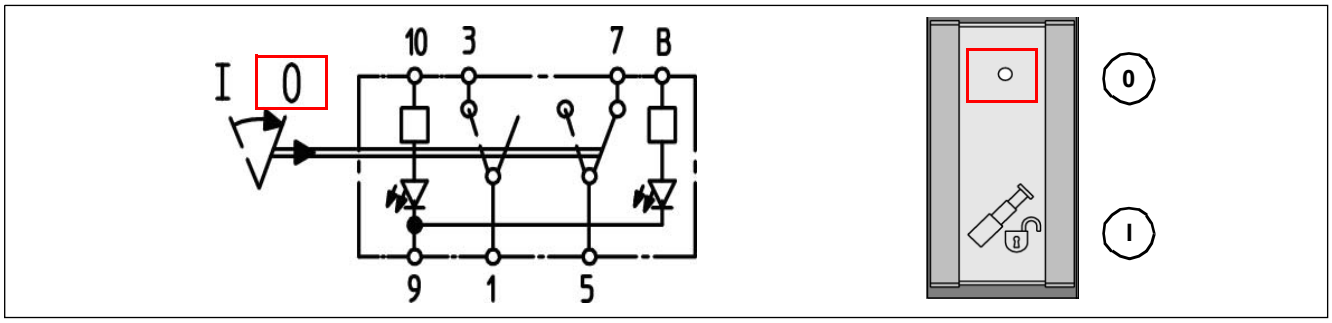

PIN	Connection	to PIN	Measuring range	
			not actuated (0)	actuated (I)
1	Output to controller N004	XE15 (1-16) S084 (B)	–	5 V
3	Input from controller N004	XE04 (2-21)	5 V	5 V
5	Output to controller N004	XE15 (1-40)	5 V	–
7	Input from controller N004	XE04 (2-21)	5 V	5 V
9	Lights	–	Earth (cab)	Earth (cab)
10	Lighting F018/10 A	–	12 V	12 V
B	Lighting for control	–	0 V	5 V

- ➥ If button **S084** is pressed in bucket mode, retraction of the boom is stopped.
- ➥ If button **S084** is pressed in fork-lift mode, retraction is stopped during lowering of the boom.
- ➥ If the touch button **S084** is actuated in manual mode, the lowering movement is continued with reduced speed.

Function description

When pressed, the touch button **S084** switches off the overload limit up to 60 s. The functions will then be controlled normally again.

In the case of an error, the bucket mode becomes active. Combined movements are stopped.

Touch button S085 – lock for long-haul travel in the keypad D003

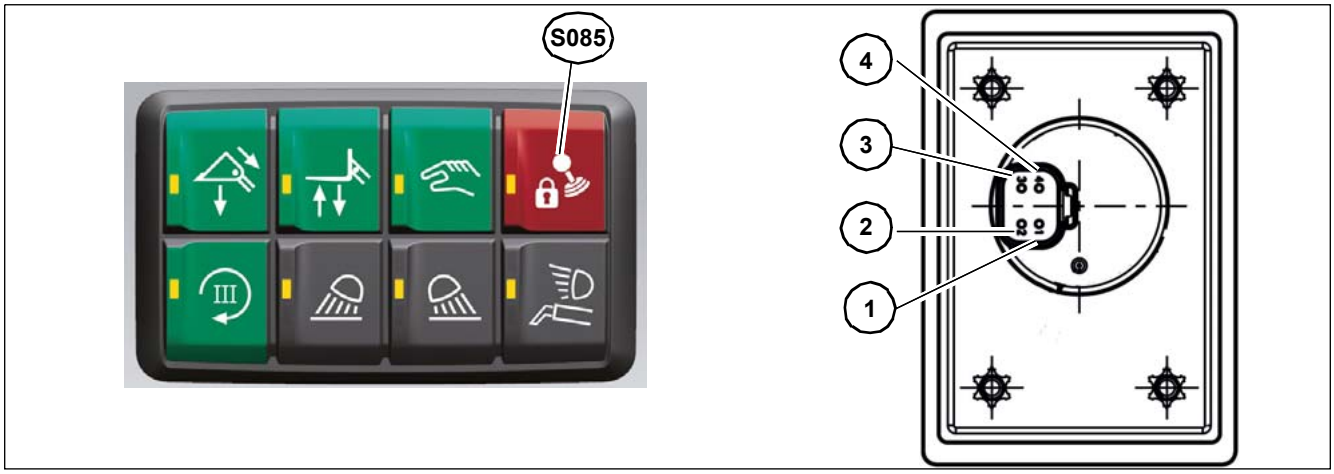

PIN	Connection	Measuring range
1	Voltage supply F032/5 A	12 V
2	Ground	Cabin
3	CAN 1	high
4	CAN 1	low

Function description

When the road travel lock function switch **S085** is switched to road travel lock ON, no hydraulic functions can be actuated. If the function is active, the touch button **S085** lights up.

Joystick shut-down switched on

With the touch button **S085** on the keypad **D003** a CAN message (CAN1) is sent to controller **N004**. The controller **N004** deactivates all outputs to the proportional valves on the control unit. In addition, all circuits of the 14-pole plug receptacle are deactivated.

Operator presence switch S104

The seat contact switch **S104** is composed of two switches that have been put into a single casing.

Driver not seated on the seat

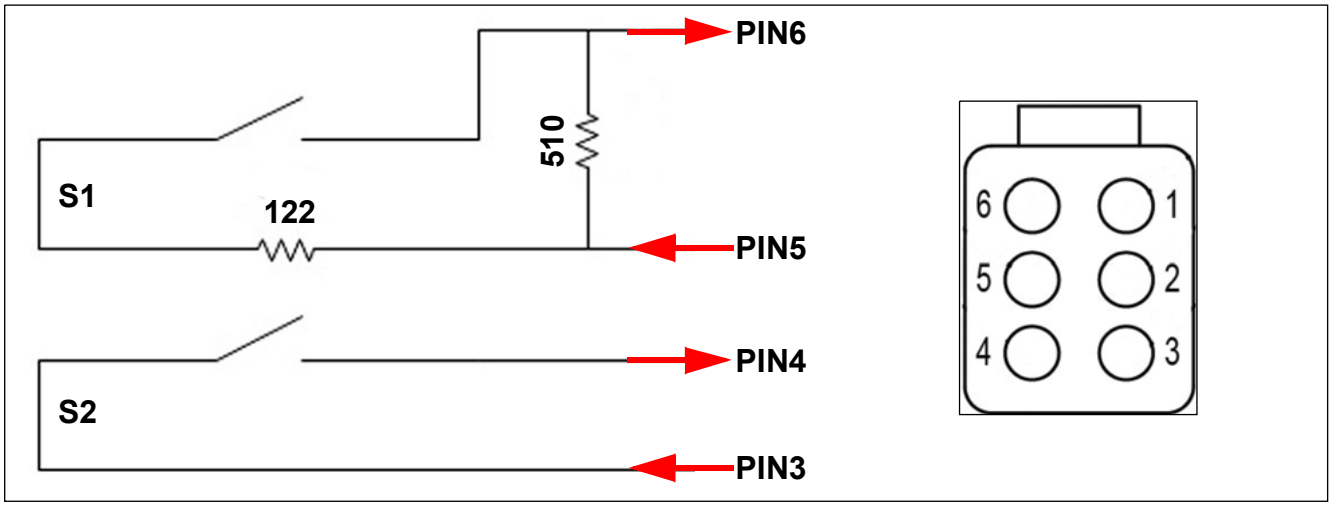

PIN	Connection	To PIN	Measuring range
1	Board voltage F038/25A (for air cushioned seat option)	–	12 V
2	Ground	Cabin	Ground
3	On-board voltage F014/5A	–	12 V
4	Signal to controller N004	XE15 (1-39)	0 V
5	Output from controller N004	XE15 (1-04)	12 V
6	Signal to controller N004	XE04 (2-44)	2 – 3 V

Operator not on seat when the function starts

Seat contact switch open

- Diesel engine cannot be started.
- The travel direction cannot be selected.

The following proportional valves are not energized.

1. Raising **Y066,** lowering **Y067** of telescopic arm
2. Fill shovel **Y068,** Empty shovel **Y069**
3. Retraction **Y023,** extension **Y024**of telescopic arm
4. Locking**Y016,** unlocking **Y017**
5. Solenoid valve for quickhitch lock **Y025**

Upper/lower rear additional control circuit

1. Raising **Y044**or lowering **Y045** tipper or raising **Y044** or lowering **Y045** auto hitch
2. Auto hitch tipper switch-over **Y046**
3. Unlock auto hitch **Y047**

Operator not in seat during active function

The following valves remain energized, even when the operator leaves the seat during the activated function.

Upper/lower rear additional control circuit

1. Raising **Y044** or lowering **Y045** tipper or raising **Y044** or lowering **Y045** auto hitch
2. Auto hitch tipper switch-over **Y046**
3. Locking permanent function of third control circuit **Y016**
4. Solenoid valve for changeover of front 4th control circuit **Y051**
5. PTO solenoid valve **Y120**
6. Rear hitch solenoid valves **Y117**, **Y118**, **Y129**

If the operator leaves the seat for longer than 3 s, the following functions will be stopped.

1. Retraction **Y023,** extension **Y024** of telescopic arm
2. Raising **Y066,** lowering **Y067** of telescopic arm
3. Fill shovel **Y068,** Empty shovel **Y069**
4. Locking **Y016,** unlocking **Y017**
5. If the lowering function **Y067** is still active after 3 s, the lowering speed is throttled in relation to the driving speed until the standstill of the lowering movement.
6. Below a speed of 7 km/h (4.3 mph), the drive is switched into neutral if the operator leaves the seat for more than 5 s.
7. If the driving speed is below 0.5 km/h (0.3 mph), after 1 s, it will be switched to neutral and a warning tone will sound.
8. A warning signal sounds at speeds over 7 km/h (4.3 mph)

Driver seated on the seat

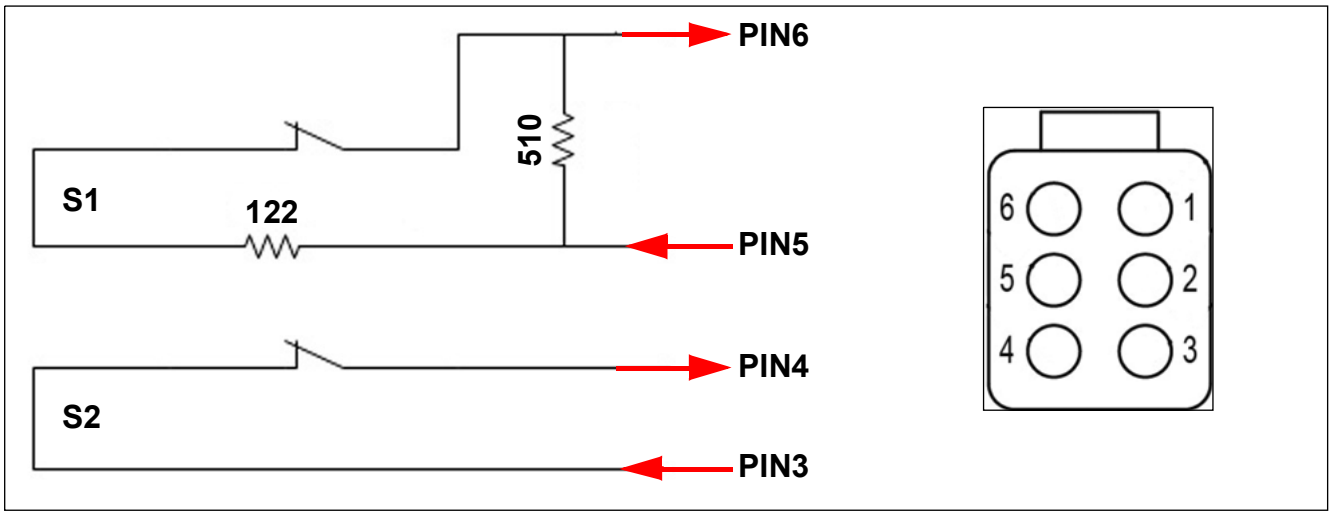

PIN	Connection	To PIN	Measuring range
1	Board voltage F038/25A (for air cushioned seat option)	–	12 V
2	Ground	Cabin	Ground
3	On-board voltage F014/5A	–	12 V
4	Signal to controller N004	XE15 (1-39)	12 V
5	Output from controller N004	XE15 (1-04)	12 V
6	Signal to controller N004	XE04 (2-44)	5 – 7 V

If a voltage of 5–7 V is applied to plug XE15 (1-04) and a voltage of 12 V to plug XE15 (1-39), the operator is in the operator's seat.

Seat contact switch closed

The vehicle can be used to its full extent

Machine runs without the driver on the seat

➥ The valves for the additional control circuits continue to be energised but have to be switched on before (operator on the seat)

If the operator leaves the seat for longer than 3 s, the following functions will be stopped.

1. Retraction **Y023,** extension **Y024** of telescopic arm
2. Raising **Y066,** lowering **Y067** of telescopic arm
3. Fill shovel **Y068,** Empty shovel **Y069**
4. Locking **Y016,** unlocking **Y017**
5. If the lowering function **Y067** is still active after 3 s, the lowering speed is throttled in relation to the driving speed until the standstill of the lowering movement.
6. Below a speed of 7 km/h (4.3 mph), the drive is switched into neutral if the operator leaves the seat for more than 5 s.
7. If the driving speed is below 0.5 km/h (0.3 mph), after 1 s, it will be switched to neutral and a warning tone will sound.
8. A warning signal sounds at speeds over 7 km/h (4.3 mph)

Belt contact switch S123 (option)

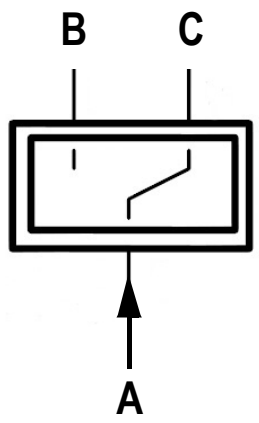

PIN	Connection	KCN (PIN)	Measuring range	
			buckled in	Not buckled in
A	On-board voltage F014/5A	–	12 V	12 V
B	Input to controller N004	XE15 (1-15)	10 V	0 V
C	Output to switching relay K110	K110 (86)	0 V	12 V

Seat belt not fastened

- Diesel engine cannot be started.
- The travel direction cannot be selected.

The following proportional valves are not energized.

1. Raising **Y066,** lowering **Y067** of telescopic arm
2. Fill shovel **Y068,** Empty shovel **Y069**
3. Retraction **Y023,** extension **Y024** of telescopic arm
4. Locking **Y016,** unlocking **Y017**
5. Solenoid valve for quickhitch lock **Y025**

Upper/lower rear additional control circuit

1. Raising **Y044** or lowering **Y045** tipper or raising **Y044** or lowering **Y045** auto hitch
2. Auto hitch tipper switch-over **Y046**

- Unlock auto hitch **Y047**

Limit switch S116

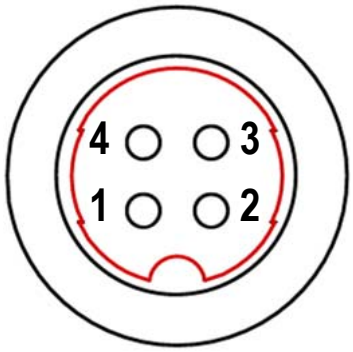

Pin assignment of terminal switch S116

PIN	Component	To PIN	Measuring range
1	Sensor GND from controller N004	XE04 (2-17)	Ground
2	To the controller N004	XE04 (2-51)	5 V
3	Sensor GND from controller N004	XE04 (2-30)	Ground
4	To the controller N004	XE04 (2-38)	5 V

Function description

When the boom is completely retracted, the overload control is switched off by limit switch **S116** (boom completely retracted). The overload indicator **P006** indicates the load or overload visually and acoustically.

Touch button S125 – manual mode in the keypad D003

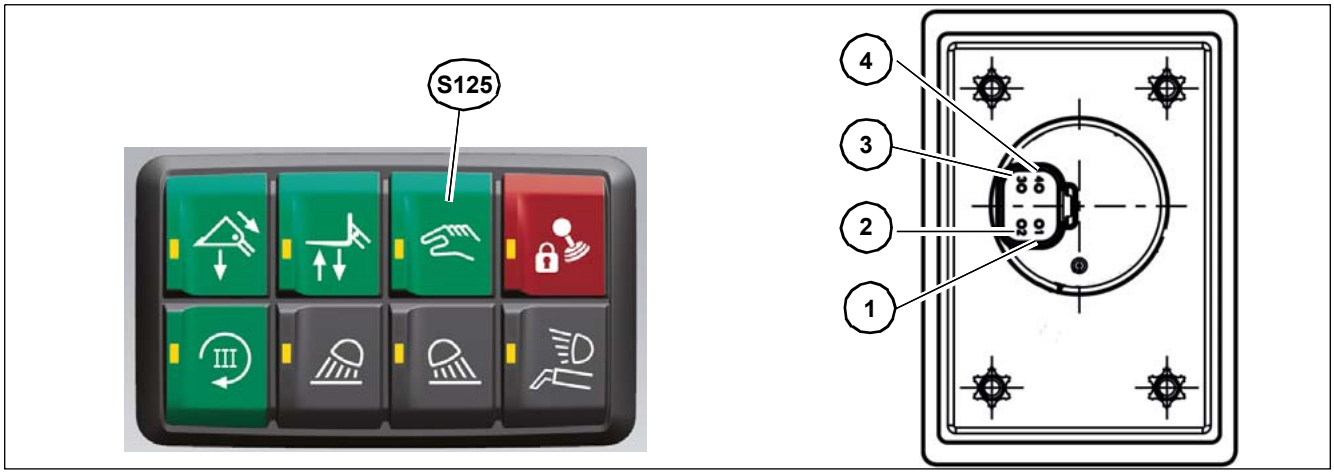

PIN	Connection	Measuring range
1	Voltage supply F032/5 A	12 V
2	Ground	Cabin
3	CAN 1	high
4	CAN 1	low

Function description

In manual mode, no combined movements can be executed. If the function is active, the touch button**S125** lights up.

Raise boom

Using the joystick **D002**, a CAN message is transmitted to controller **N004.** The controller **N004** controls the raise proportional valve **Y066** via a tube characteristic. The characteristic curve is influenced by the angle.

Raising in manual mode in the event of an overload

The raise function is always activated. If the roller for inner boom **S038** (extend) is actuated, the function stops when the load limit has been reached. Through the two-hand operation with the touch button **S084** is it possible to extend the telescopic arm further.

Lower boom

The lowering speed is determined in relation to the angel and the load.

If the load is only just below the load limit during the lowering movement, the lowering speed is decreased to standstill. To continue lowering, the boom has to be retracted. The telescopic arm can also be lowered via a two-hand operation with touch button **S084**.

Touch button S125 – stacking mode in the keypad D003

PIN	Connection	Measuring range
1	Voltage supply F032/5 A	12 V
2	Ground	Cabin
3	CAN 1	high
4	CAN 1	low

Function description

In fork-lift mode, 2 functions are always executed during the raising/ lowering processes. These functions are raise &extend and lower & retract. If the function is active, the touch button**S125** lights up.

This enables a vertical movement (vertical raising/lowering).

Raising in fork-lift mode

Using the joystick **D002**, a CAN message is transmitted to the controller **N004.** The controller **N004** controls the raising **Y066** and extending **Y024** proportional valve via a tube characteristic. The characteristic curve is influenced by the angle.

Lowering in fork-lift mode

Using the joystick **D002**, a CAN message is transmitted to the controller **N004**. The controller **N004** controls the lower **Y067** and retract **Y023** proportional valves via a tube characteristic. The characteristic curve is influenced by the angle.

Lowering in fork-lift mode in the event of an overload

In the event of an overload, the boom is retracted quicker. If the push-out ram is operated additionally via the roller **S038** (extend), then the extend function goes into overload and the boom retracts automatically.

The hose burst valve **XV** for the lifting cylinder **085** is opened during the lowering function via the pilot control pressure.

Touch button S125 – shovel mode in the keypad D003

PIN	Connection	Measuring range
1	Voltage supply F032/5 A	12 V
2	Ground	Cabin
3	CAN 1	high
4	CAN 1	low

Function description

In bucket mode, when lowered, boom retraction is faster than lowering speed. If the function is active, the touch button **S125** lights up.

The lifting cylinder **085** is controlled by section A3/B3 of the hydraulic control unit **XIII**. The raise function is secured via the hose burst valve **XV**. Pressure relief is provided via the shock extraction (secondary valves) **069** in the hydraulic control unit **XIII** from the lifting circuit.

Raising in bucket mode

Using the joystick **D002**, a CAN message is transmitted to the controller **N004.** The controller **N004** controls the raise proportional valve **Y066** via a tube characteristic.

Raising in bucket mode in the event of an overload

The raise function is always activated. If the boom segment with roller **S038** (extend) is operated, the function is stopped as soon as the load limit is reached.

Lowering in bucket mode

Using the joystick **D002**, a CAN message is transmitted to the controller **N004.** The controller **N004** controls the lower **Y067** and retract **Y023** proportional valves via a tube characteristic.

The hose burst valve **XV** for the lifting cylinder **085** is opened during the lowering function via the pilot control pressure.

Lowering in bucket mode in the event of an overload

An overload cannot happen as the boom always retracts when it is being lowered.

If the push-out ram is operated additionally via the roller **S038** (extend), then the extend function goes into overload and the boom retracts automatically.

8.14 Hydraulic diagrams

Total hydraulic diagram part 1

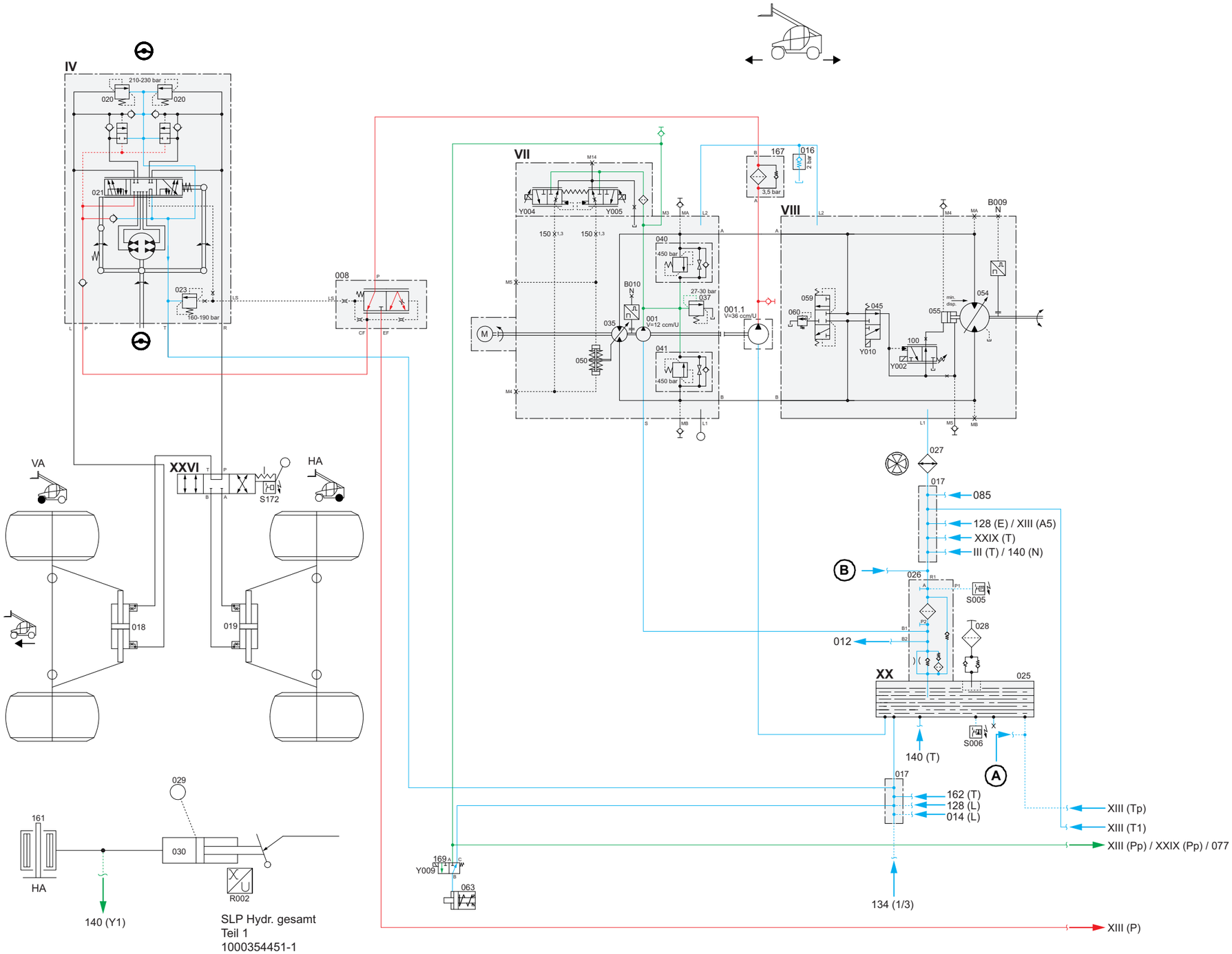

Total hydraulic diagram part 2

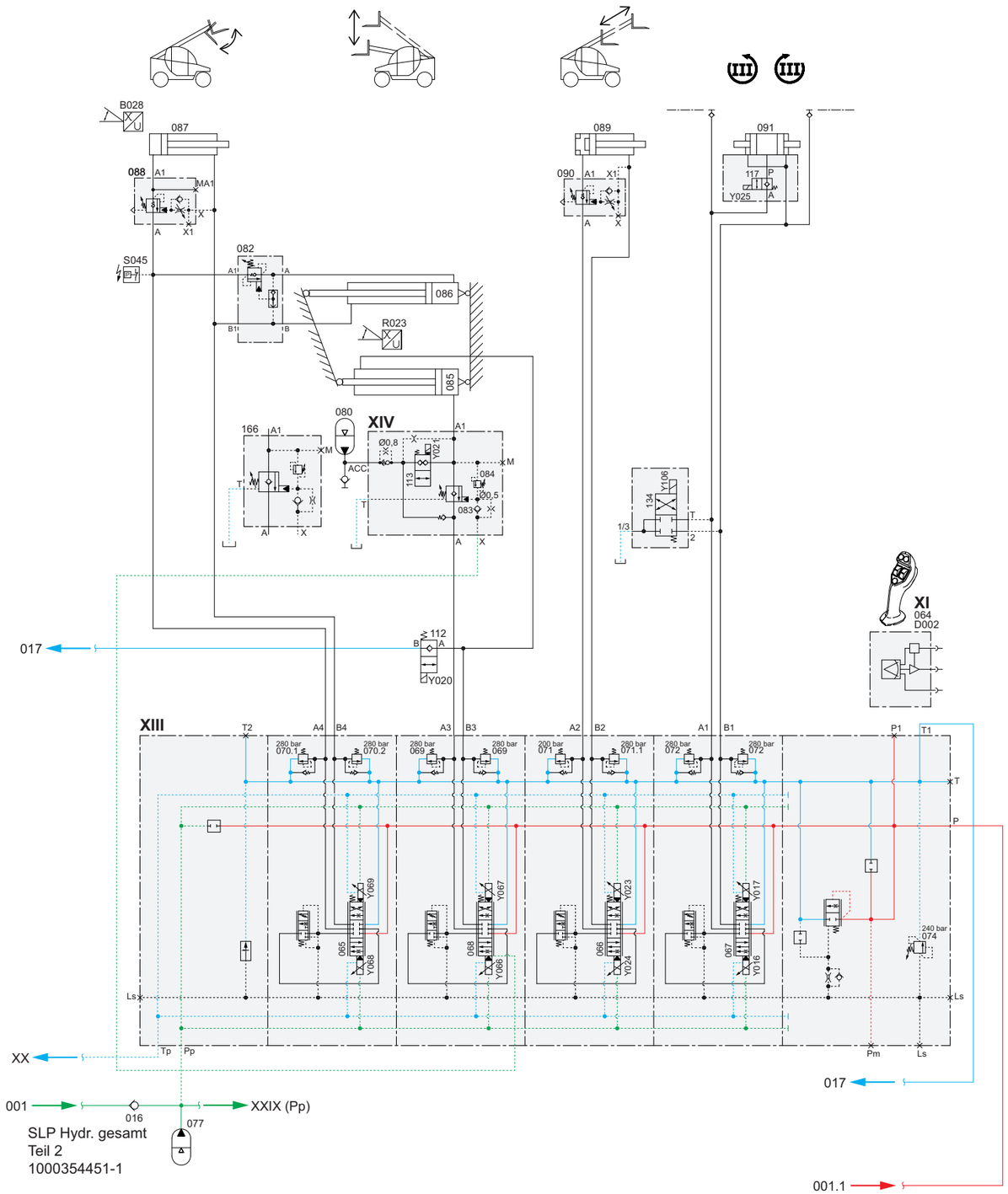

Colour definition

Colour	Meaning
	High pressure
	Low pressure
	Boost pressure/pilot pressure

Oil supply of components

Pos.	Component
A	Input from leakage pipe, open return from outside
B	Input from open return (front/outside)

Legend for total hydraulic diagram part 1

Main components

Pos.	Component
III	Reversing valve
IV	Steering system valve block
VII	Travelling drive variable displacement pump
VIII	Travelling drive variable displacement motor
XIII	Main control unit (hydraulics)
XX	Reservoir
XXIX	Additional control unit (rear hydraulics)
XXVI	All-wheel/front wheel/crab steer mode steering selector valve

Components

Pos.	Component
001	Boost pump
008	Priority valve (CF)
001.1	Constant pump hydraulics
012	Gear pump (power take-off)
014	Fan motor (reversing fan)
016	RHD non-return valve
017	Manifold block
018	Front axle steering cylinder
019	Rear axle steering cylinder
020	Secondary pressure-limiting valve
021	Rotary spool valve
023	Primary pressure-limiting valve
025	Reservoir

Pos.	Component
026	Return filter
027	Oil cooler
028	Breather filter
029	Coolant reservoir
030	Master brake cylinder
035	Drive pump
037	Pressure relief valve for boost pressure
040	High pressure valve reverse
041	High-pressure valve forward travel
045	Forward-reverse spool valve
050	Pivoting angle-variable displacement cylinder for variable displacement pump
054	Drive variable displacement motor
055	Pivoting angle-variable displacement cylinder for variable displacement motor
059	Scouring slide valve
060	Flush valve
063	Differential lock hydraulic cylinder
085	Lift cylinder
100	(Y002) Capacity proportional valve
128	(Y046) 6/2 directional valve (tipping trailer/Autohitch changeover)
134	(Y106) 4/2-directional valve for pressure relief 3rd control circuit
140	Trailer brake valve (France)
150	Orifice
161	Brake calliper, rear axle
162	Unlock hydraulic trailer brake / autohitch advancement
167	High pressure filter
169	3/3 multiple way valve, differential lock
B009	Speed sensor
B010	Diesel engine speed sensor
HA	Rear axle
R002	Inching angle of rotation sensor
S005	Push button switch for hydraulic oil contamination display
S006	Temperature switch, hydraulic oil
S172	Steering mode lever limit switch (crab steering)
VA	Front axle
Y002	Proportional valve for driving modes (turtle, rabbit)
Y004	Reverse proportional valve
Y005	Forward proportional valve
Y009	Solenoid valve, differential lock
Y010	Travel direction identification solenoid valve

Legend for total hydraulic diagram part 2

Main components

Pos.	Component
XI	Control lever (joystick) pilot control unit
XIII	Main control unit (hydraulics)
XIV	Hose burst valve with load stabiliser
XX	Reservoir
XXIX	Additional control unit (rear hydraulics)

Components

Pos.	Component
001	Boost pump
001.1	Constant pump hydraulics
016	Non-return valve
017	Manifold block
064	Control lever (joystick) valve unit
065	Control spool, tilt ram
066	Control spool, push-out ram
067	Control spool, 3rd control circuit
068	Control spool, lifting cylinder
069	Secondary valve for raise/lower lift cylinder
071	Secondary valve for extend bottom side of extension cylinder
072	Secondary valve for third control circuit, lock/unlock
074	LS pressure relief valve
077	Emergency lowering pressure accumulator
080	Pressure accumulator
082	Load safety valve with hose burst valve
083	Non-return valve
084	Hose burst valve pilot spool
085	Lift cylinder
086	Compensation cylinder
087	Tilt cylinder
088	Tilt ram hose burst valve
089	Push-out cylinder
090	Hose burst valve for push-out ram
091	Lock cylinder
112	(Y020) Load stabiliser
113	(Y021) Load stabiliser
117	(Y025) 2/2 Solenoid valve, quickhitch lock

Pos.	Component
134	(Y106) 4/2-directional valve for pressure relief 3rd control circuit
166	Lift ram hose burst valve without load stabilizer
070.1	Secondary valve for filling tipping cylinder on rod side
070.2	Secondary valve for emptying tipping cylinder on bottom side
071.1	Secondary valve for retracting extension cylinder on the rod side
B028	Angle of rotation sensor for bucket repositioning
D002	Control lever electronics
R023	Boom angle sensor
S045	Load stabiliser pressure switch
Y016	Proportional valve (lock)
Y017	Proportional valve (unlock)
Y020	Load stabiliser solenoid valve
Y021	Load stabiliser solenoid valve
Y023	Proportional valve (retract)
Y024	Proportional valve (extend)
Y025	Quickhitch lock solenoid valve
Y066	Proportional valve (raise)
Y067	Proportional valve (lower)
Y068	Proportional valve (dump in)
Y069	Proportional valve (dump out)
Y106	Solenoid valve (pressure relief)

Hydraulic diagram for electrically reversible third control circuit

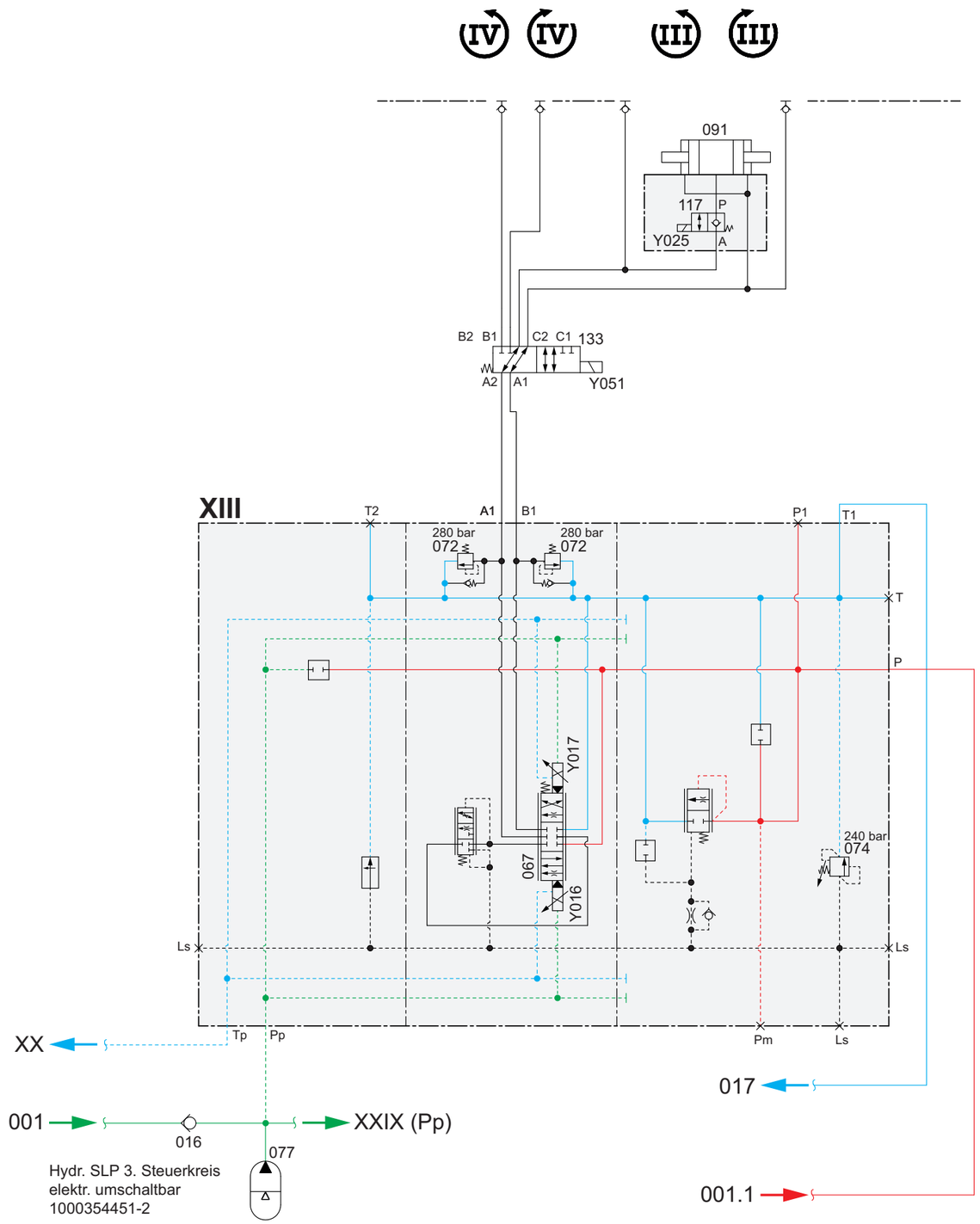

Colour definition

Colour	Meaning
	High pressure
	Low pressure
	Boost pressure/pilot pressure

Legend for hydraulic diagram for electrically reversible third control circuit

Main components

Pos.	Component
XIII	Main control unit (hydraulics)
XX	Reservoir
XXIX	Additional control unit (rear hydraulics)

Components

Pos.	Component
001	Boost pump
001.1	Constant pump hydraulics
016	Non-return valve
017	Manifold block
067	Control spool, 3rd control circuit
072	Secondary valve 3rd control circuit, lock/unlock
074	LS pressure relief valve
077	Emergency lowering pressure accumulator
091	Lock cylinder
117	(Y025) 2/2 Solenoid valve, quickhitch lock
133	(Y051) 6/2 multiple way valve for switch-over of front 4th control circuit (lock/unlock)
Y016	Proportional valve (lock)
Y017	Proportional valve (unlock)
Y025	Quickhitch lock solenoid valve
Y051	Solenoid valve for switch-over of front 4th control circuit (lock/unlock)

Hydraulic diagram for rear additional circuit + tipper

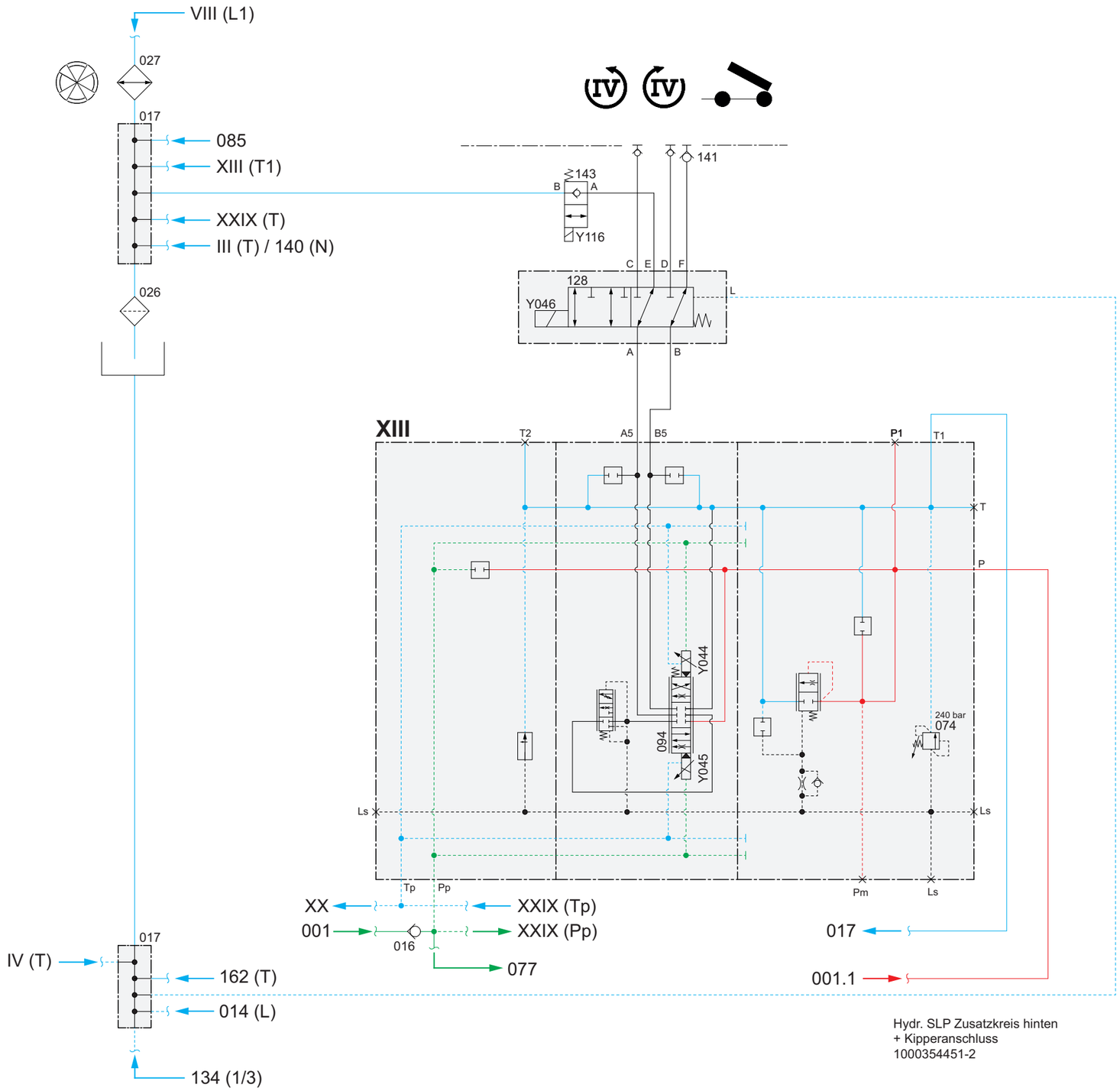

Hydr. SLP Zusatzkreis hinten
+ Kipperanschluss
1000354451-2

Colour definition

Colour	Meaning
	High pressure
	Low pressure
	Boost pressure/pilot pressure

Legend for hydraulic diagram for rear additional circuit + tipper

Main components

Pos.	Component
III	Reversing valve
IV	Steering system valve block
VIII	Travelling drive variable displacement motor
XIII	Main control unit (hydraulics)
XX	Reservoir
XXIX	Additional control unit (rear hydraulics)

Components

Pos.	Component
001	Boost pump
001.1	Constant pump hydraulics
014	Fan motor (reversing fan)
016	Non-return valve
017	Manifold block
026	Return filter
027	Oil cooler
074	LS pressure relief valve
077	Emergency lowering pressure accumulator
085	Lift cylinder
094	Relay valve tipper/auto hitch/rear additional circuit
128	(Y046) 6/2 directional valve (tipping trailer/Autohitch changeover)
134	(Y106) 4/2-directional valve for pressure relief 3rd control circuit
140	Trailer brake valve (France)
141	Quick coupler
143	Lower 2/2 multiple way valve of tipper
162	Advance hydraulic trailer brake/unlock auto hitch
Y044	Raise tipping trailer solenoid valve
Y045	Lower tipping trailer solenoid valve
Y046	Autohitch/tipping trailer changeover solenoid valve
Y116	Lower tipping trailer solenoid valve

Hydraulic diagram for rear additional circuit + auto hitch + tipper

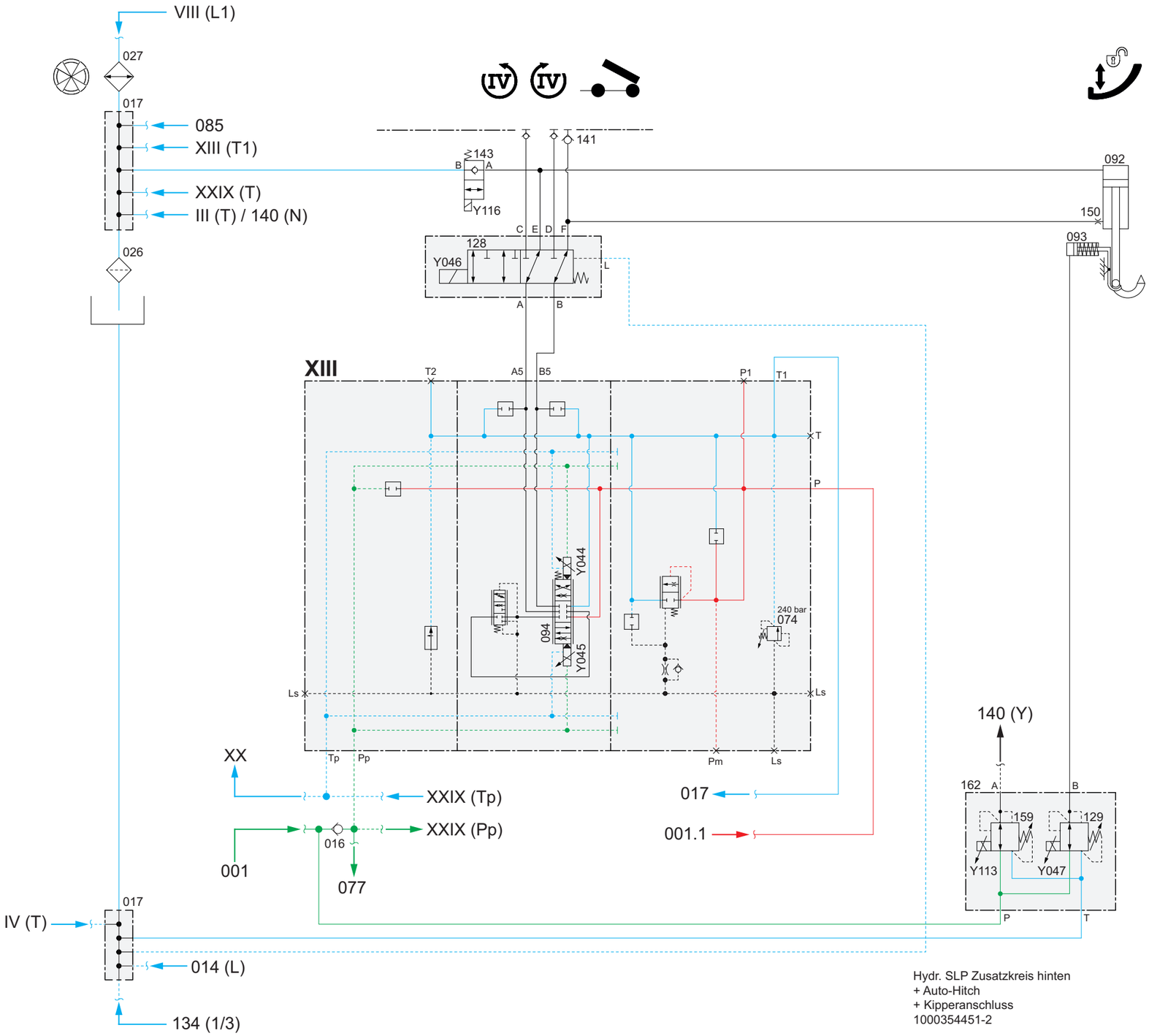

Hydr. SLP Zusatzkreis hinten
+ Auto-Hitch
+ Kipperanschluss
1000354451-2

Colour definition

Colour	Meaning
	High pressure
	Low pressure
	Boost pressure/pilot pressure

Legend for hydraulic diagram for rear additional circuit + auto hitch + tipper

Main components

Pos.	Component
III	Reversing valve
IV	Steering system valve block
VIII	Travelling drive variable displacement motor
XIII	Main control unit (hydraulics)
XX	Reservoir
XXIX	Additional control unit (rear hydraulics)

Components

Pos.	Component
001	Boost pump
001.1	Constant pump hydraulics
014	Fan motor (reversing fan)
016	Non-return valve
017	Manifold block
026	Return filter
027	Oil cooler
074	LS pressure relief valve
077	Emergency lowering pressure accumulator
085	Lift cylinder
092	Autohitch ram
093	Autohitch lock
094	Relay valve tipper/auto hitch/rear additional circuit
128	(Y046) 6/2 directional valve (tipping trailer/Autohitch changeover)
129	(Y047) unlock auto hitch solenoid valve
134	(Y106) 4/2-directional valve for pressure relief 3rd control circuit
140	Trailer brake valve (France)
141	Quick coupler

Pos.	Component
143	Lower 2/2 multiple way valve of tipper
150	Orifice
159	(Y113) Solenoid valve for hydraulic trailer brake
162	Advance hydraulic trailer brake/unlock auto hitch
Y044	Raise tipping trailer solenoid valve
Y045	Lower tipping trailer solenoid valve
Y046	Autohitch/tipping trailer changeover solenoid valve
Y047	Autohitch unlock solenoid valve
Y113	Solenoid valve (hydraulic trailer brake)
Y116	Lower tipping trailer solenoid valve

Hydraulic diagram for rear double-action additional circuit

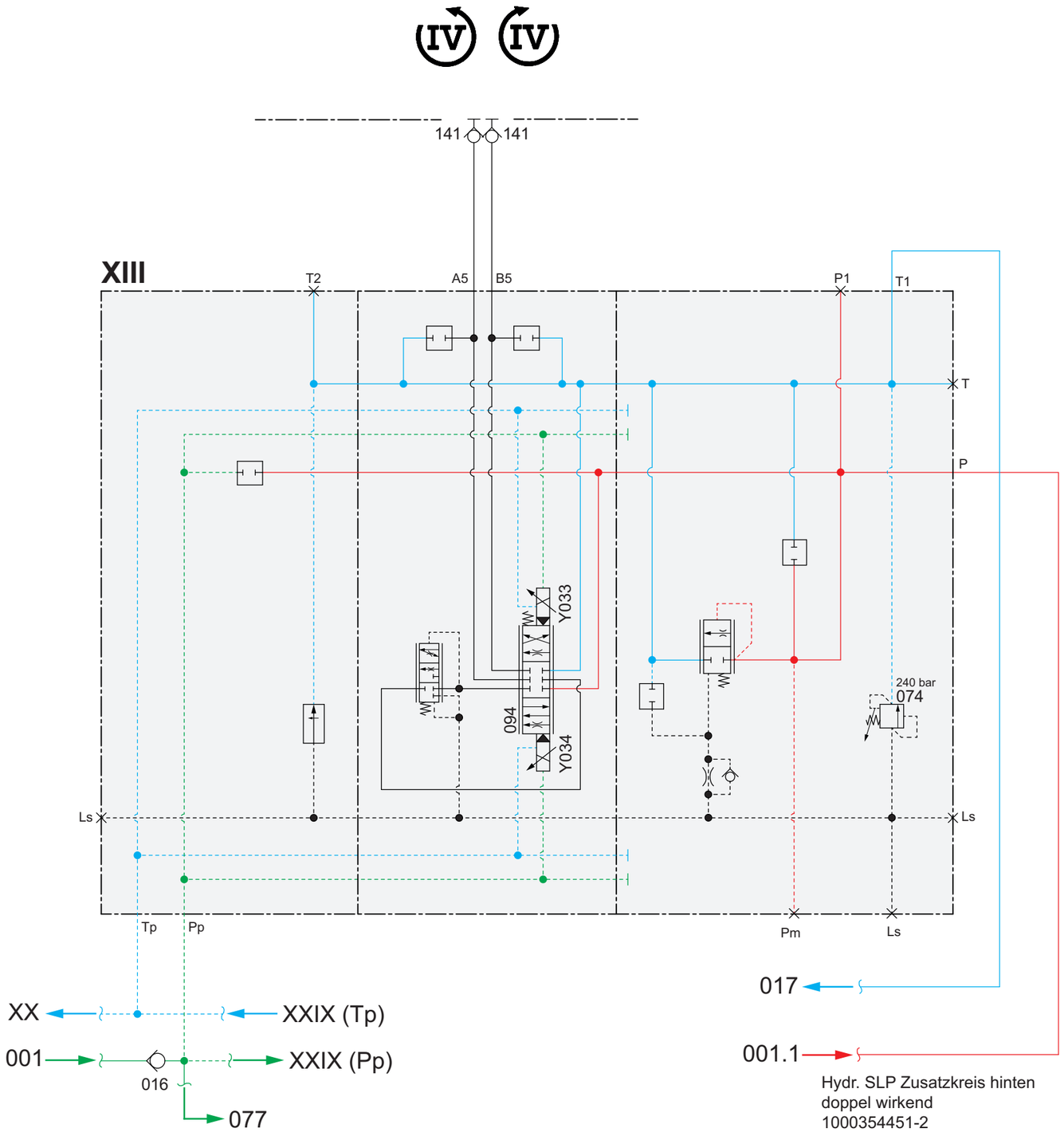

Colour definition

Colour	Meaning
	High pressure
	Low pressure
	Boost pressure/pilot pressure

Legend of hydraulic diagram for rear double-action additional circuit

Main components

Pos.	Component
XIII	Main control unit (hydraulics)
XX	Reservoir
XXIX	Additional control unit (rear hydraulics)

Components

Pos.	Component
001	Boost pump
001.1	Constant pump hydraulics
016	RHD non-return valve
017	Manifold block
074	LS pressure relief valve
077	Emergency lowering pressure accumulator
094	Relay valve tipper/auto hitch/rear additional circuit
141	Quick coupler
Y033	Proportional valve additional circuit
Y034	Proportional valve additional circuit

Hydraulic diagram for rear additional circuit + auto hitch

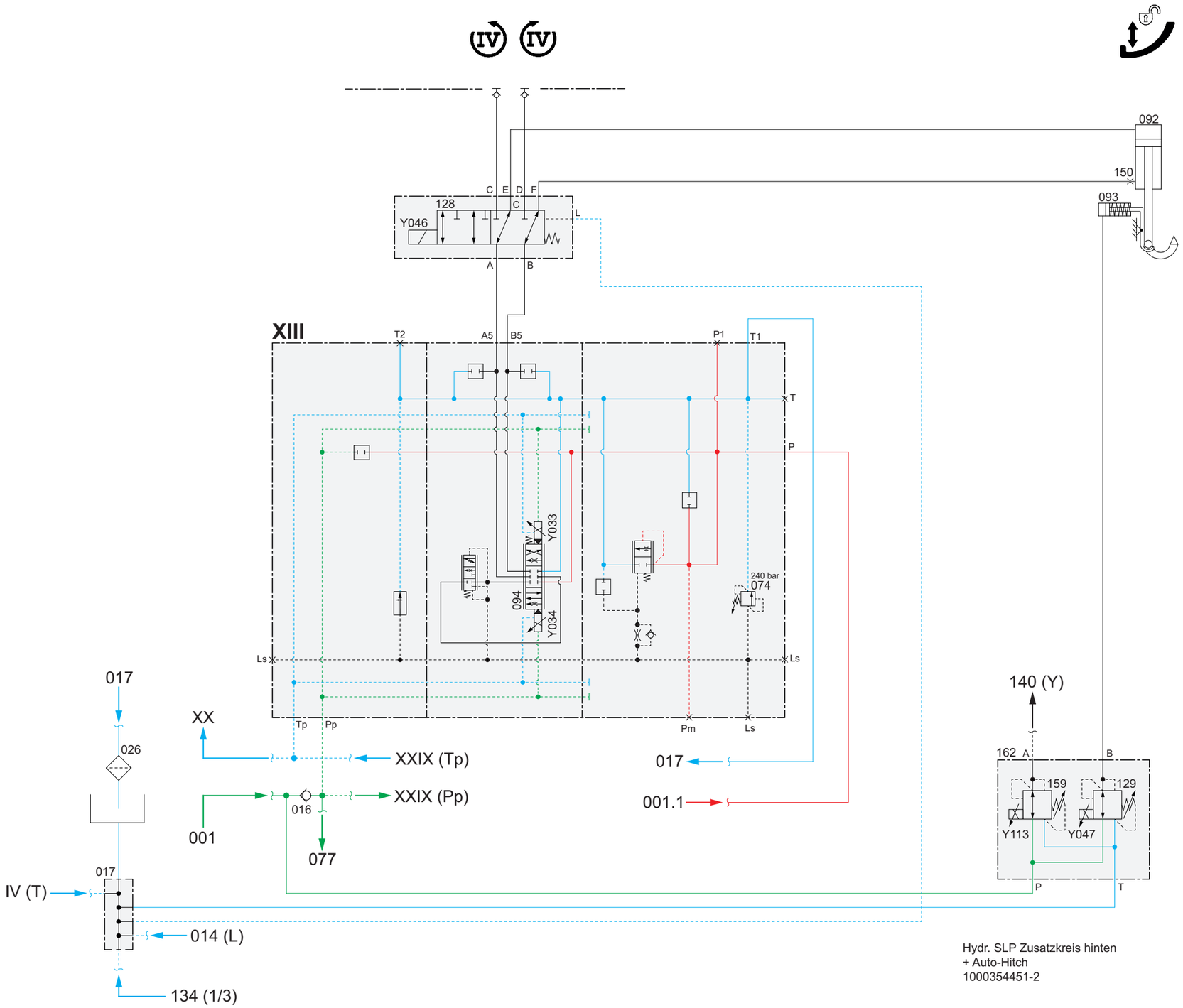

Colour definition

Colour	Meaning
	High pressure
	Low pressure
	Boost pressure/pilot pressure

Legend for hydraulic diagram for rear additional circuit + auto hitch

Main components

Pos.	Component
IV	Steering system valve block
XIII	Main control unit (hydraulics)
XX	Reservoir
XXIX	Additional control unit (rear hydraulics)

Components

Pos.	Component
001	Boost pump
001.1	Constant pump hydraulics
014	Fan motor (reversing fan)
016	Non-return valve
017	Manifold block
026	Return filter
074	LS pressure relief valve
077	Emergency lowering pressure accumulator
092	Autohitch ram
093	Autohitch lock
094	Relay valve tipper/auto hitch/rear additional circuit
128	(Y046) 6/2 directional valve (tipping trailer/Autohitch changeover)
129	(Y047) unlock auto hitch solenoid valve
134	(Y106) 4/2-directional valve for pressure relief 3rd control circuit
140	Trailer brake valve (France)
150	Orifice
159	(Y113) Solenoid valve for hydraulic trailer brake
162	Unlock hydraulic trailer brake / autohitch advancement
Y033	Proportional valve additional circuit
Y034	Proportional valve additional circuit
Y046	Autohitch/tipping trailer changeover solenoid valve
Y047	Autohitch unlock solenoid valve
Y113	Solenoid valve (hydraulic trailer brake)

Hydraulic diagram of reversing fan

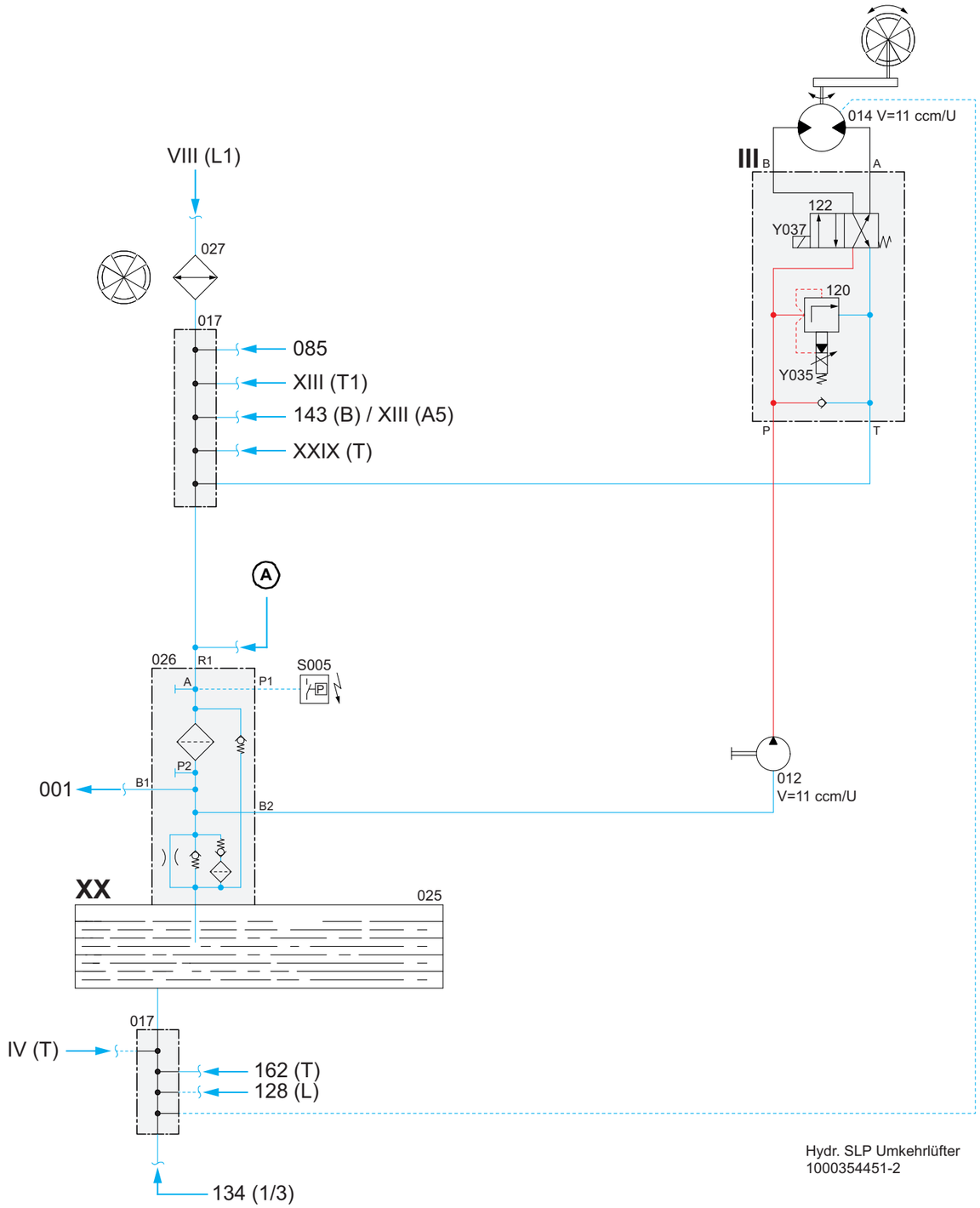

Colour definition

Colour	Meaning
	High pressure
	Low pressure
	Boost pressure/pilot pressure

Oil supply of components

Pos.	Component
A	Input from open return (front/outside)

Legend for hydraulic circuit diagram, reversing fan

Main components

Pos.	Component
III	Reversing valve
IV	Steering system valve block
VIII	Travelling drive variable displacement motor
XIII	Main control unit (hydraulics)
XX	Reservoir
XXIX	Additional control unit (rear hydraulics)

Components

Pos.	Component
001	Boost pump
012	Gear pump (power take-off)
014	Fan motor (reversing fan)
017	Manifold block
025	Reservoir
026	Return filter
027	Oil cooler

Pos.	Component
085	Lift cylinder
120	(Y035) Proportional pressure reducing valve, fan
122	(Y037) 4/2 multiple way valve reversing fan
128	(Y046) 6/2 directional valve (tipping trailer/Autohitch changeover)
134	(Y106) 4/2-directional valve for pressure relief 3rd control circuit
143	Lower 2/2 multiple way valve of tipper
162	Unlock hydraulic trailer brake / autohitch advancement
S005	Push button switch for hydraulic oil contamination display
Y035	Fan solenoid valve
Y037	Reversing fan solenoid valve

Hydraulic diagram for single-action tipper

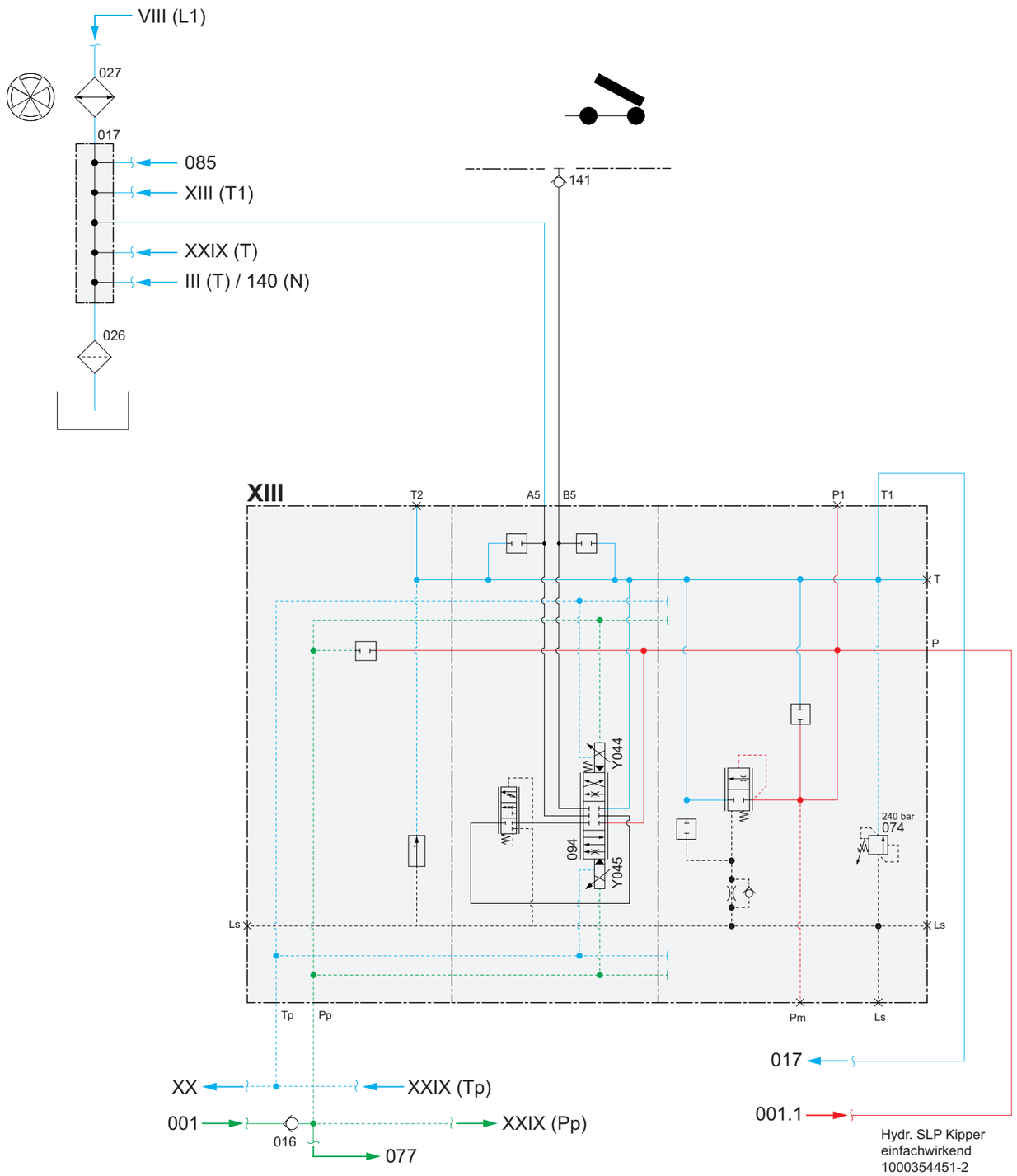

Colour definition

Colour	Meaning
	High pressure
	Low pressure
	Boost pressure/pilot pressure

Legend for hydraulic diagram for single-action tipper

Main components

Pos.	Component
III	Reversing valve
VIII	Travelling drive variable displacement motor
XIII	Main control unit (hydraulics)
XX	Reservoir
XXIX	Additional control unit (rear hydraulics)

Components

Pos.	Component
001	Boost pump
001.1	Constant pump hydraulics
016	RHD non-return valve
017	Manifold block
026	Return filter
027	Oil cooler
074	LS pressure relief valve
077	Emergency lowering pressure accumulator
085	Lift cylinder
094	Relay valve tipper/auto hitch/rear additional circuit
140	Trailer brake valve (France)
141	Quick coupler
Y044	Raise tipping trailer solenoid valve
Y045	Lower tipping trailer solenoid valve

Auto hitch hydraulic diagram + tipper

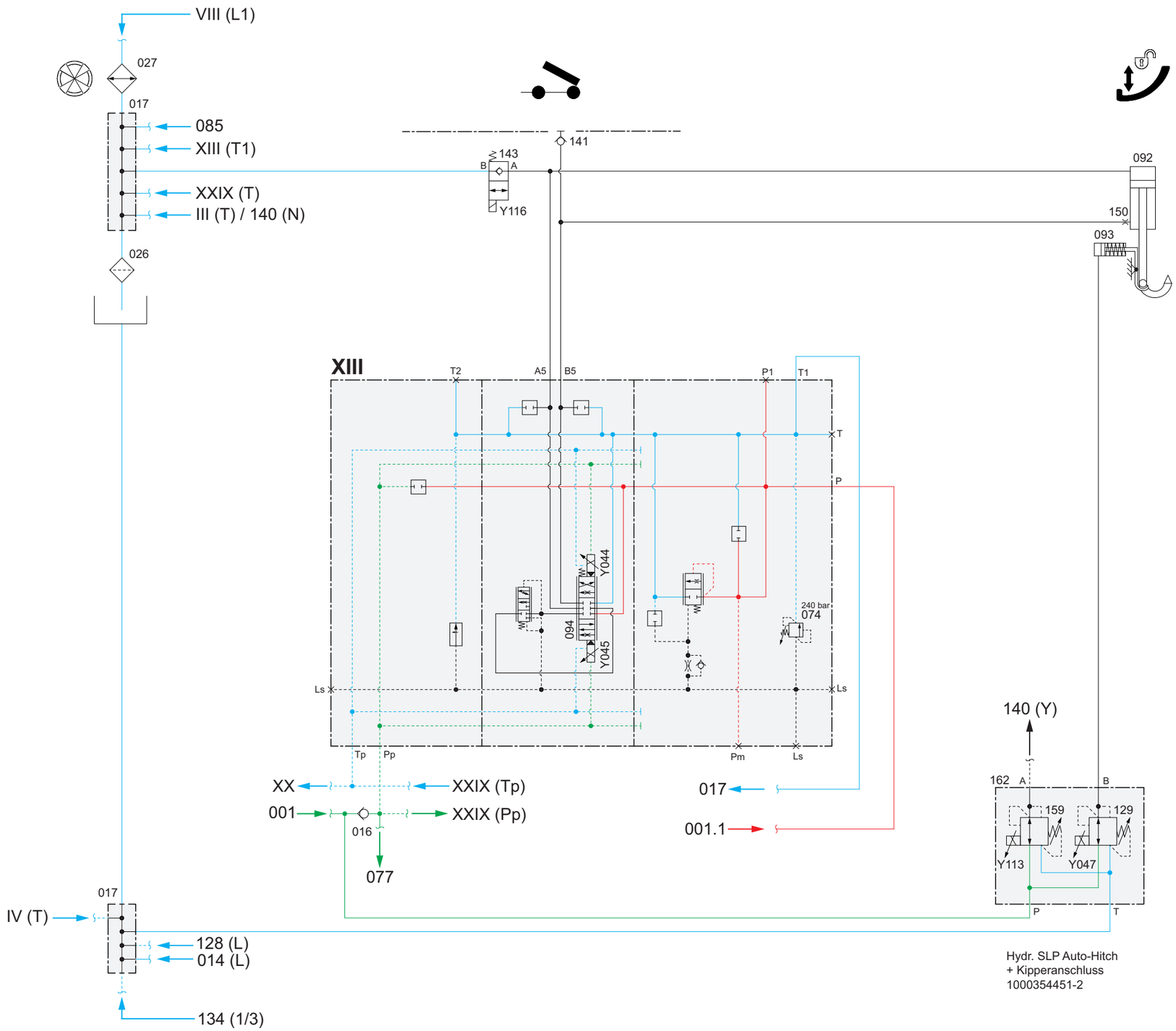

Colour definition

Colour	Meaning
	High pressure
	Low pressure
	Boost pressure/pilot pressure

Legend for auto hitch hydraulic diagram + tipper

Main components

Pos.	Component
III	Reversing valve
IV	Steering system valve block
VIII	Travelling drive variable displacement motor
XIII	Main control unit (hydraulics)
XX	Reservoir
XXIX	Additional control unit (rear hydraulics)

Components

Pos.	Component
001	Boost pump
001.1	Constant pump hydraulics
014	Fan motor (reversing fan)
016	Non-return valve
017	Manifold block
026	Return filter
027	Oil cooler
074	LS pressure relief valve
077	Emergency lowering pressure accumulator
085	Lift cylinder
092	Autohitch ram
093	Autohitch lock
094	Relay valve tipper/auto hitch/rear additional circuit
128	(Y046) 6/2 directional valve (tipping trailer/Autohitch changeover)
129	(Y047) unlock auto hitch solenoid valve
134	(Y106) 4/2-directional valve for pressure relief 3rd control circuit
140	Trailer brake valve (France)

Pos.	Component
141	Quick coupler
143	Lower 2/2 multiple way valve of tipper
150	Orifice
159	(Y113) Solenoid valve for hydraulic trailer brake
162	Advance hydraulic trailer brake/unlock auto hitch
Y044	Raise tipping trailer solenoid valve
Y045	Lower tipping trailer solenoid valve
Y047	Autohitch unlock solenoid valve
Y113	Solenoid valve (hydraulic trailer brake)
Y116	Lower tipping trailer solenoid valve

Auto hitch hydraulic diagram

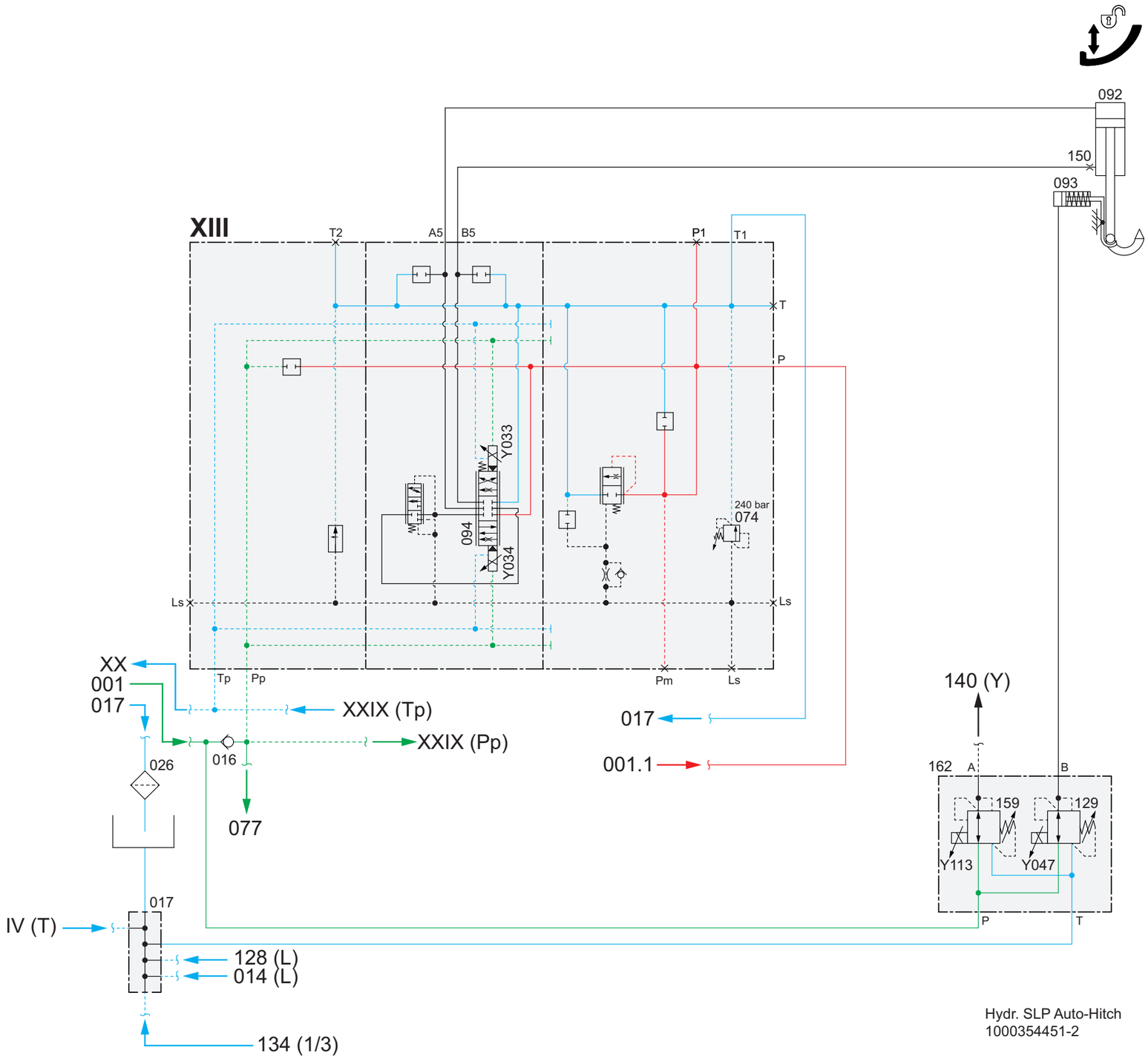

Colour definition

Colour	Meaning
	High pressure
	Low pressure
	Boost pressure/pilot pressure

Legend for auto hitch hydraulic diagram

Main components

Pos.	Component
IV	Steering system valve block
XIII	Main control unit (hydraulics)
XX	Reservoir
XXIX	Additional control unit (rear hydraulics)

Components

Pos.	Component
001	Boost pump
001.1	Constant pump hydraulics
014	Fan motor (reversing fan)
016	Non-return valve
017	Manifold block
026	Return filter
074	LS pressure relief valve
077	Emergency lowering pressure accumulator
092	Autohitch ram
093	Autohitch lock
094	Relay valve tipper/auto hitch/rear additional circuit
128	(Y046) 6/2 directional valve (tipping trailer/Autohitch changeover)
129	(Y047) unlock auto hitch solenoid valve
134	(Y106) 4/2-directional valve for pressure relief 3rd control circuit
140	Trailer brake valve (France)
150	Orifice
159	(Y113) Solenoid valve for hydraulic trailer brake
162	Advance hydraulic trailer brake/unlock auto hitch
Y033	Proportional valve additional circuit
Y034	Proportional valve additional circuit
Y047	Autohitch unlock solenoid valve
Y113	Solenoid valve (hydraulic trailer brake)

Open return hydraulic diagram

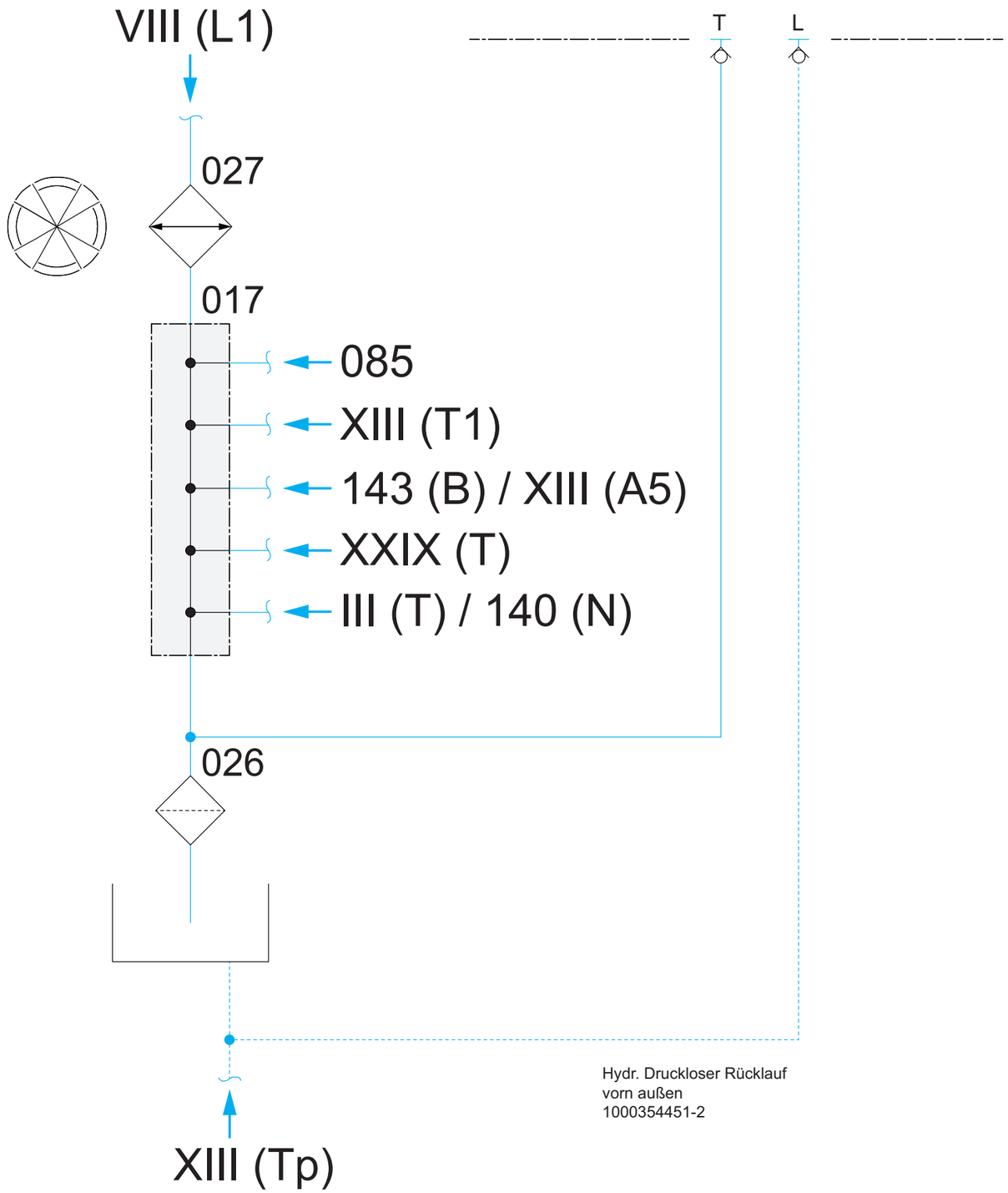

Colour definition

Colour	Meaning
	Low pressure

Open return hydraulic diagram legend

Main components

Pos.	Component
III	Reversing valve
VIII	Travelling drive variable displacement motor
XIII	Main control unit (hydraulics)
XXIX	Additional control unit (rear hydraulics)

Components

Pos.	Component
017	Manifold block
026	Return filter
027	Oil cooler
085	Lift cylinder
143	Lower 2/2 multiple way valve of tipper
140	Trailer brake valve (France)

Hydraulic diagram of hydraulic trailer brake

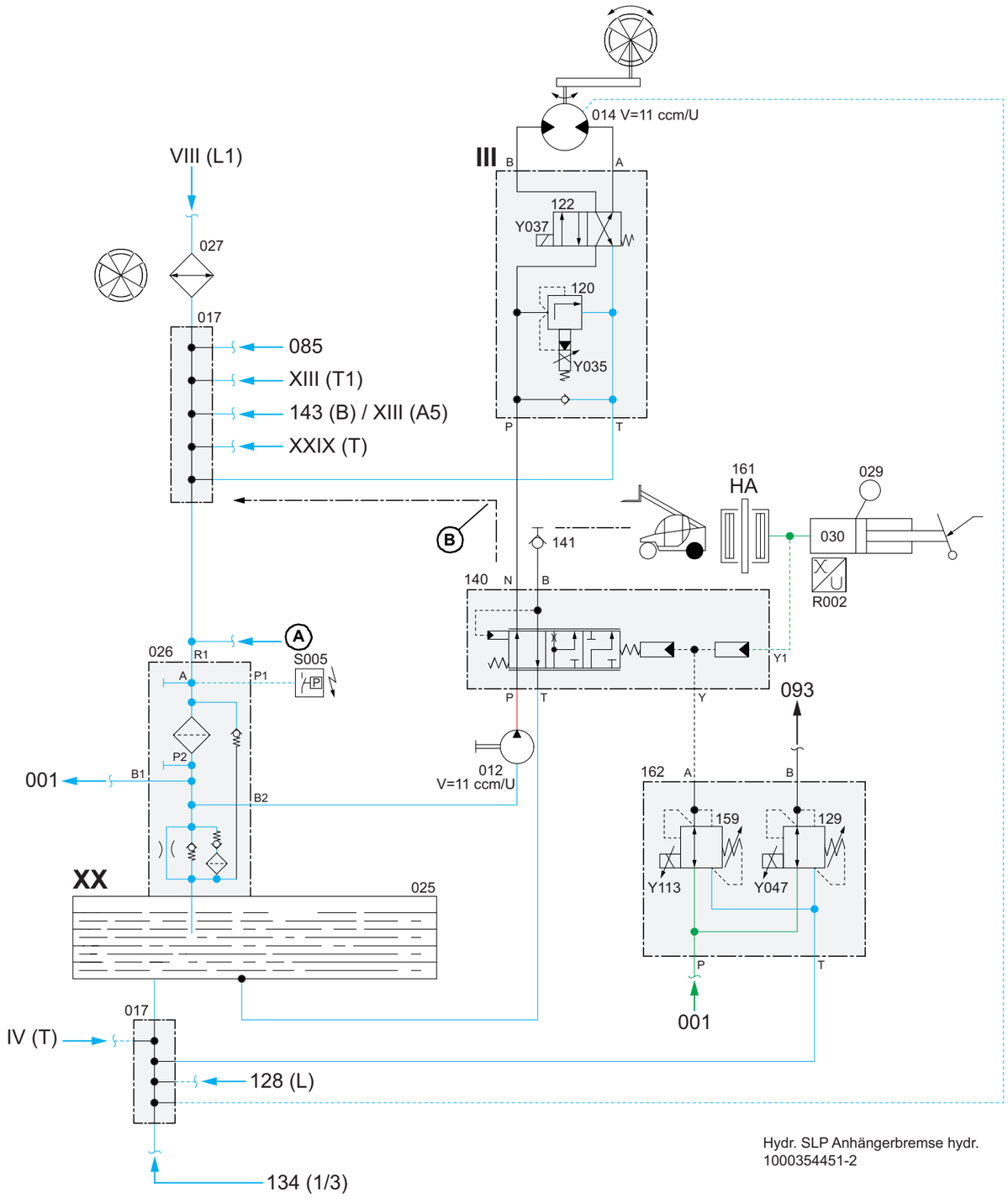

Colour definition

Colour	Meaning
	High pressure
	Low pressure
	Boost pressure/pilot pressure

Oil supply of components

Pos.	Component
A	Input from open return (front/outside)
B	If there is no hydraulic van, the trailer brake valve **140** (connection **N**) is directly connected to the distribution block **017**

Legend for hydraulic diagram of hydraulic trailer brake

Main components

Pos.	Component
III	Reversing valve
IV	Steering system valve block
VIII	Travelling drive variable displacement motor
XIII	Main control unit (hydraulics)
XX	Reservoir
XXIX	Additional control unit (rear hydraulics)

Components

Pos.	Component
001	Boost pump
012	Gear pump (power take-off)
014	Fan motor (reversing fan)
017	Manifold block
025	Reservoir
026	Return filter
027	Oil cooler
029	Coolant reservoir
030	Master brake cylinder
085	Lift cylinder
093	Autohitch lock
120	(Y035) Proportional pressure reducing valve, fan
122	(Y037) 4/2 multiple way valve reversing fan
128	(Y046) 6/2 directional valve (tipping trailer/Autohitch changeover)

Pos.	Component
129	(Y047) unlock auto hitch solenoid valve
134	(Y106) 4/2-directional valve for pressure relief 3rd control circuit
140	Trailer brake valve (France)
141	Quick coupler
143	Lower 2/2 multiple way valve of tipper
159	(Y113) Solenoid valve for hydraulic trailer brake
161	Brake calliper, rear axle
162	Unlock hydraulic trailer brake / autohitch advancement
HA	Rear axle
R002	Inching angle of rotation sensor
S005	Push button switch for hydraulic oil contamination display
Y035	Fan solenoid valve
Y037	Reversing fan solenoid valve
Y047	Autohitch unlock solenoid valve
Y113	Solenoid valve (hydraulic trailer brake)

9 Electrical system

9.1 Fuses, relay

Fuse assignment

The printed circuit board for the fuses and relays can be found under the right keypad.

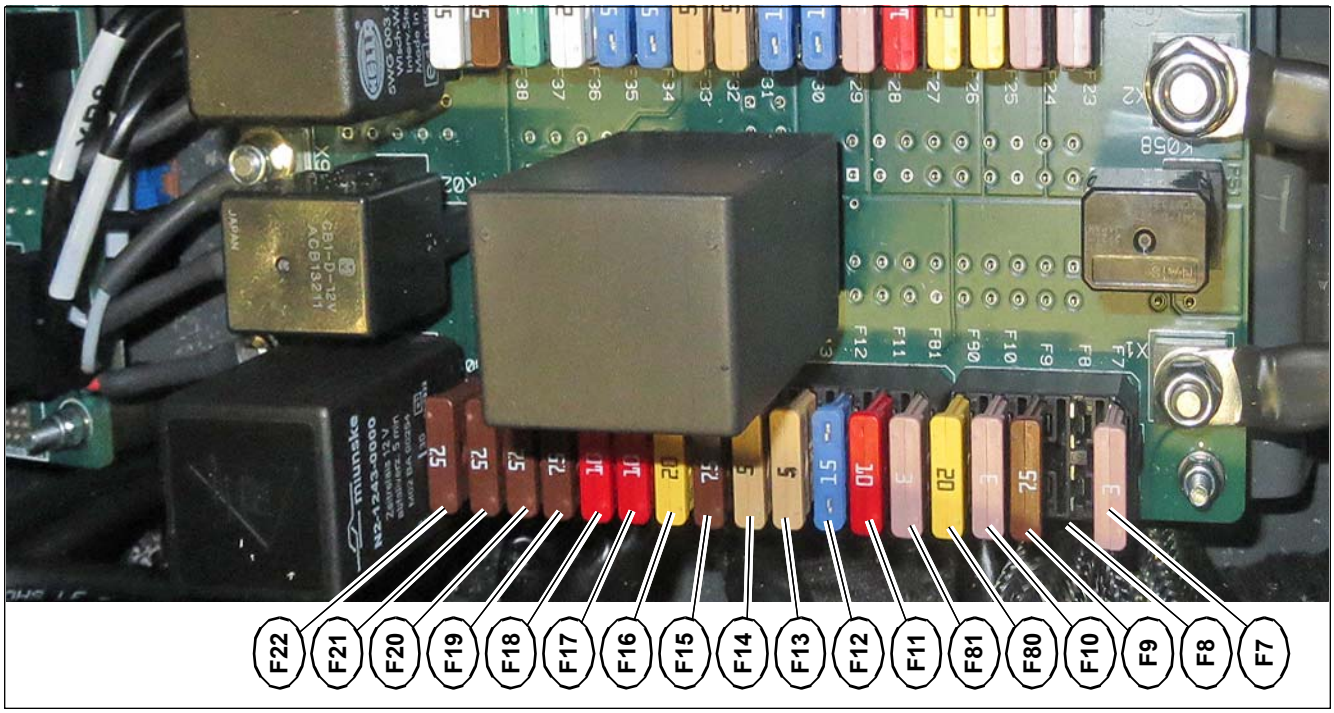

No.	Rated current (A)	Protected circuit
F007	3	Drive interlock, telematics
F008	–	Not assigned
F009	7.5	Radio
F010	3	Joystick
F080	20	Hazard warning lights
F081	3	Highsides signals controller
F011	10	Rear wiper
F012	15	12 V power outlet
F013	5	Overload warning device, coolant level
F014	5	Parking brake, push button switch S045 load stabiliser
F015	7.5	Rotating beacon
F016	20	Light switch **S014,** clamp 30, hazard warning light, beam flasher, interior light
F017	10	Left parking light/search light
F018	10	Side light right, search light
F019	7.5	Low beam (left)
F020	7.5	Low beam (right)
F021	7.5	High beam (left)
F022	7.5	High beam (right)

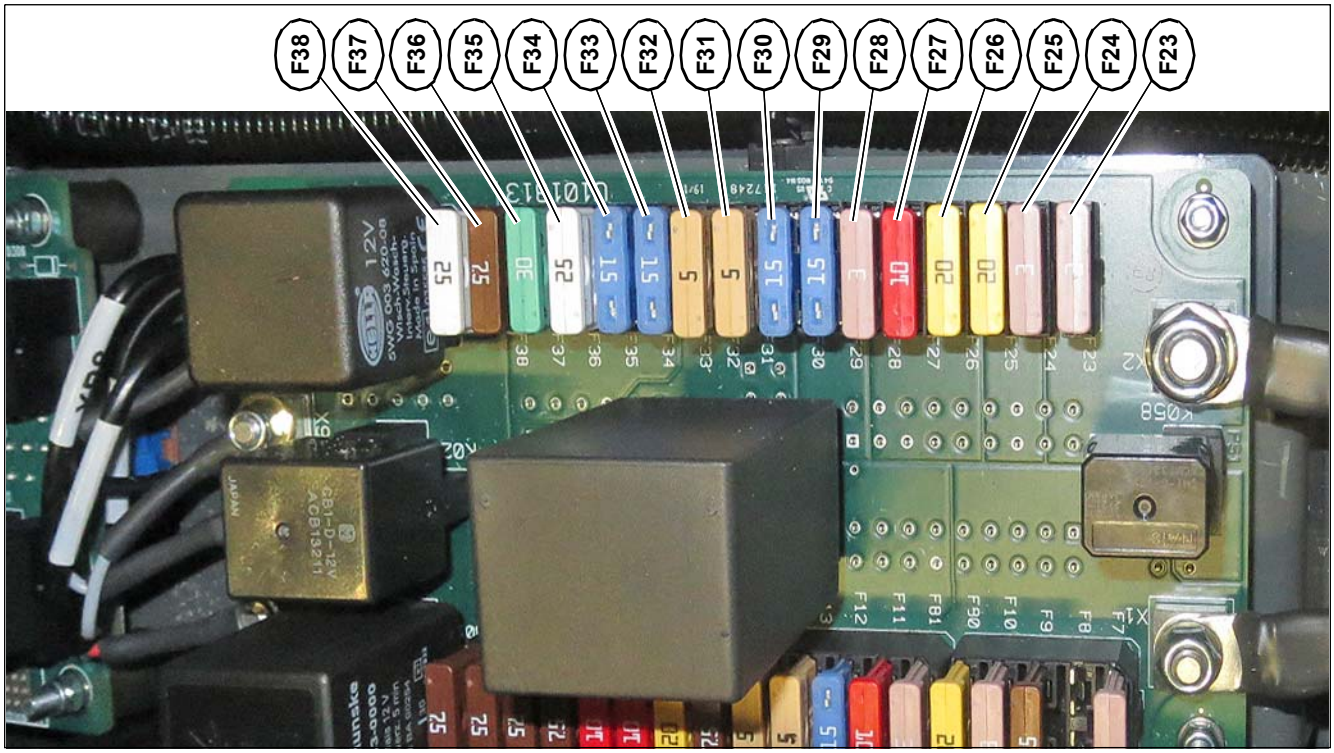

No.	Rated current (A)	Protected circuit
F023	3	Display instrument, buzzer
F024	3	Drive interlock, camera
F025	20	Light switch **S014**, clamp 15
F026	20	Front wiper, front signal horn
F027	10	Brake light, left/right reverse light, reversing alarm
F028	3	Time lag relay, auto hitch **S137**, speed sensor**B104**
F029	15	Front working light
F030	15	Rear working light
F031	5	Coupling signal, telematics, diagnostics
F032	5	Keypads, jog dial, triangle joystick, joystick
F033	15	Boom working lights
F034	15	7-pole and 14-pole front socket
F035	25	Heating, air conditioning (option)
F036	30	Window heating
F037	7.5	Radio
F038	25	Operator’s seat: heating, lumbar support, compressor

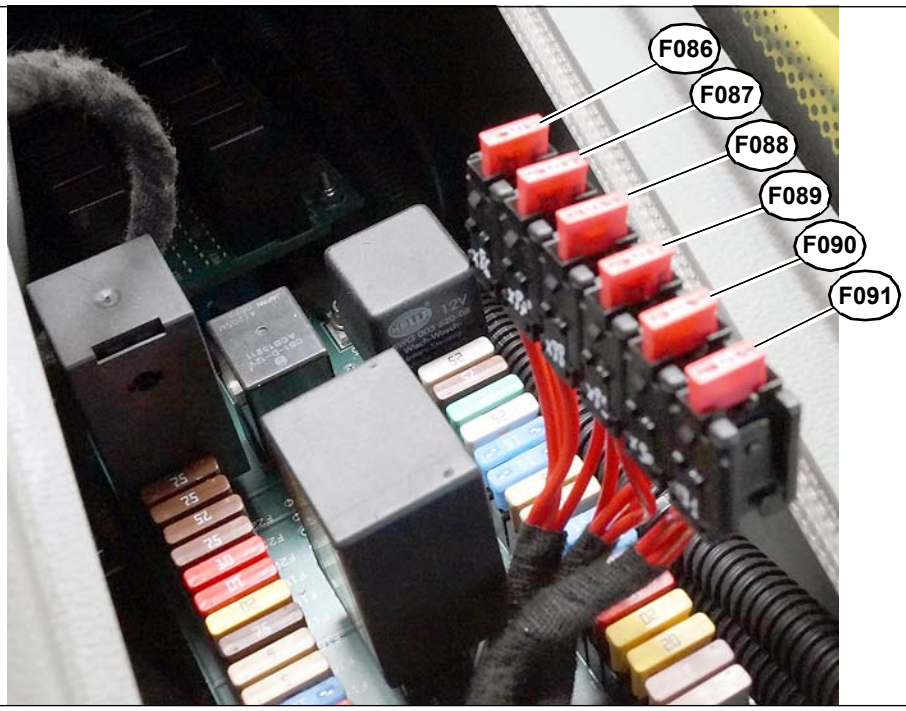

No.	Rated current (A)	Protected circuit
F086	10	Input voltage of cab controller**N004**
F087	10	
F088	10	
F089	10	
F090	10	
F091	10	

Relay to board

The printed circuit board for the fuses and relays can be found under the right keypad.

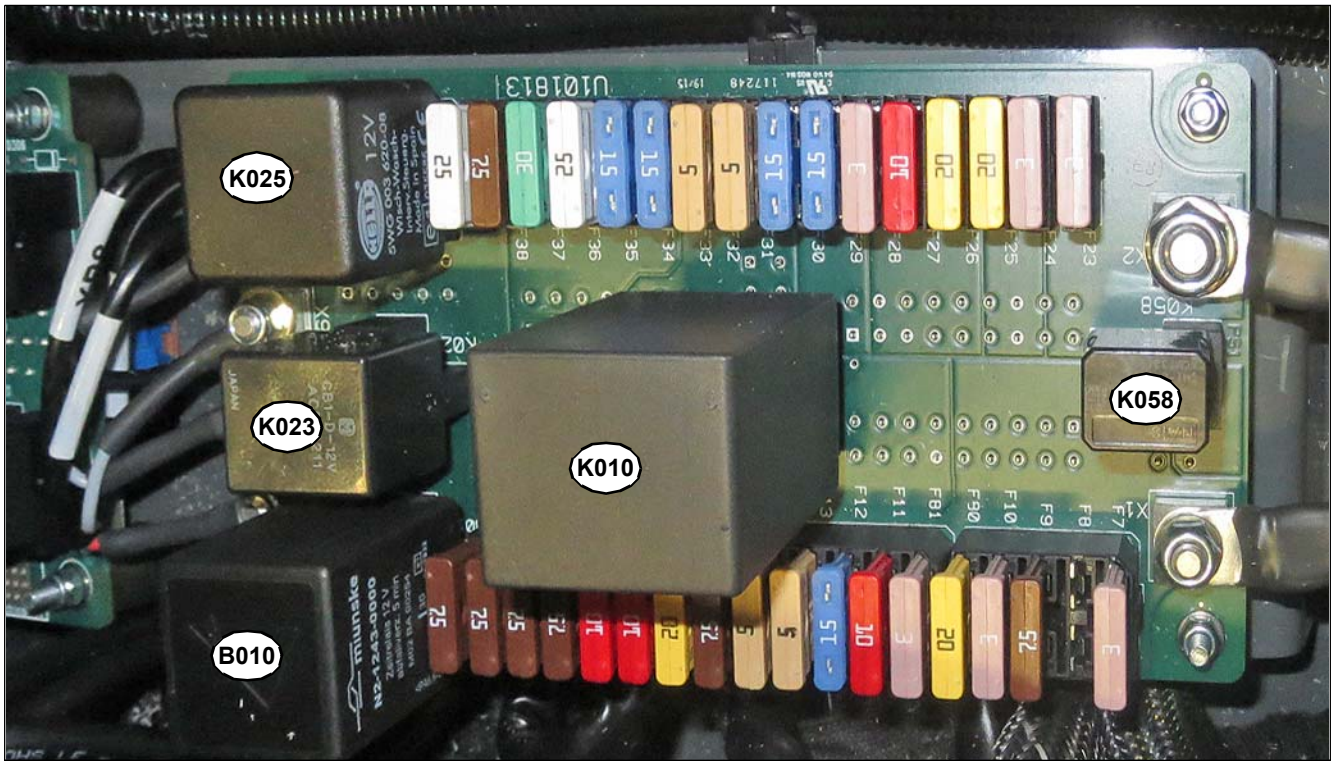

Switching relay no.	Protected circuit
K058	1st/2nd speed switching relay
K010	Turn indicator relay
K025	Intermittent-wipe switching relay
K023	Wiper switching relay (1st speed)
B018	Buzzer

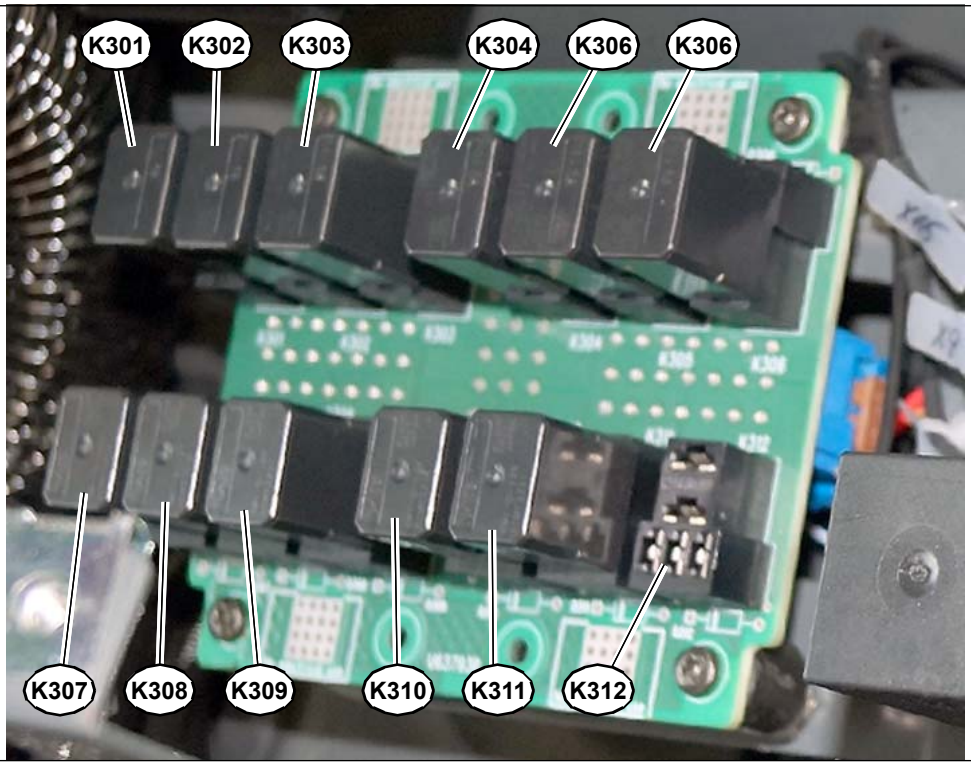

Switching relay no.	Slot no.	Protected circuit
K048	K301	Front working light
K047	K302	Rear working light
K049	K303	Boom working lights
K033	K304	Window heating
K016	K305	7-pole plug receptacle (front)
K101	K306	7-pole plug receptacle (front) circuit 1
K102	K307	7-pole plug receptacle (front) circuit 2
	K308	Not assigned
K003	K309	Reversing warning system
K114	K310	Rotating beacon
K030	K311	Brake
	K312	Not assigned

Relay in foot well (start interlock)

The relays are located underneath the cover next to the accelerator pedal.

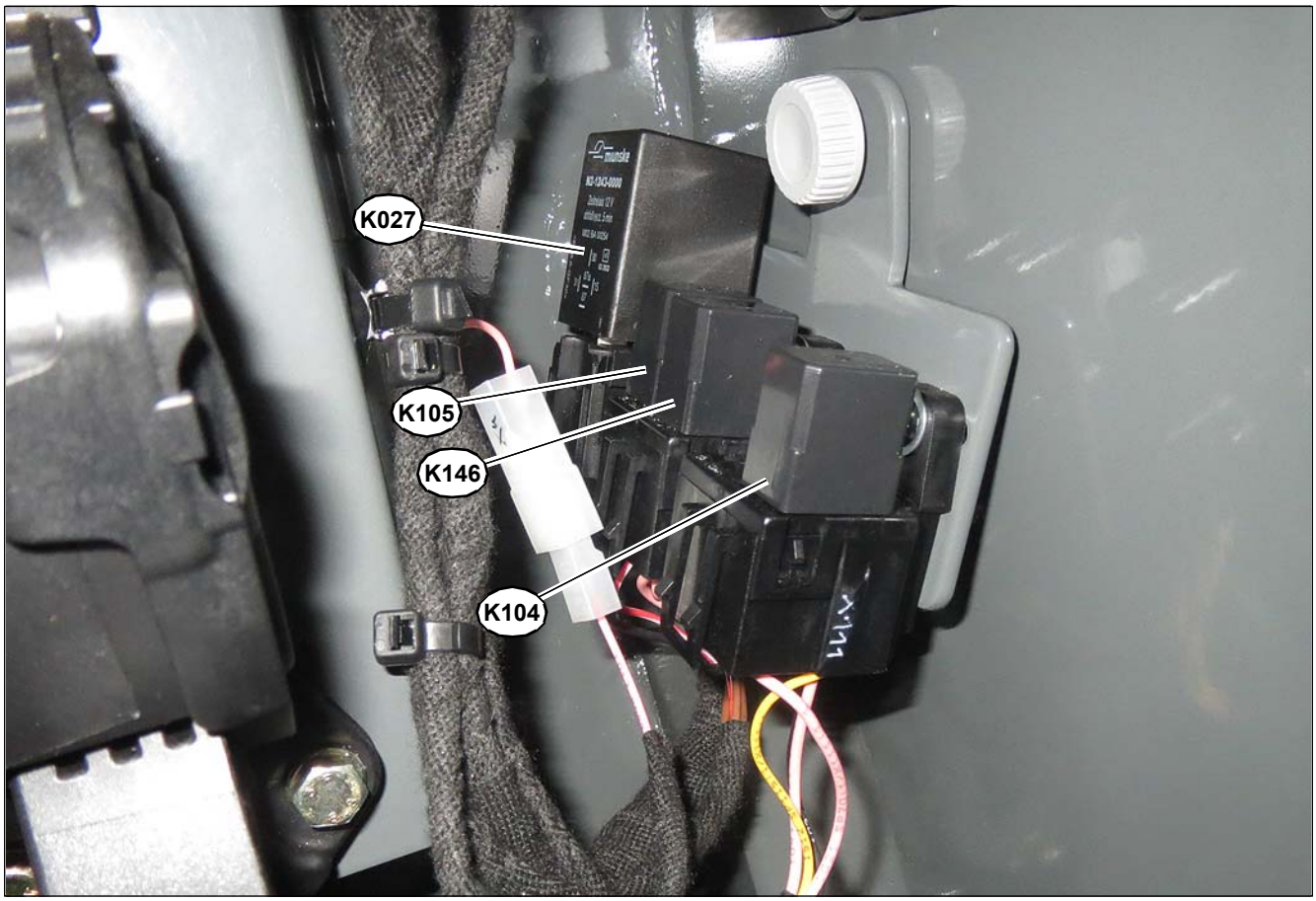

Switching relay no.	Protected circuit
K104	Seat contact switch relay
K146	Belt contact switch relay
K105	Parking brake relay
K027	Time lag relay

Main fuse box N025 with relays in the engine compartment

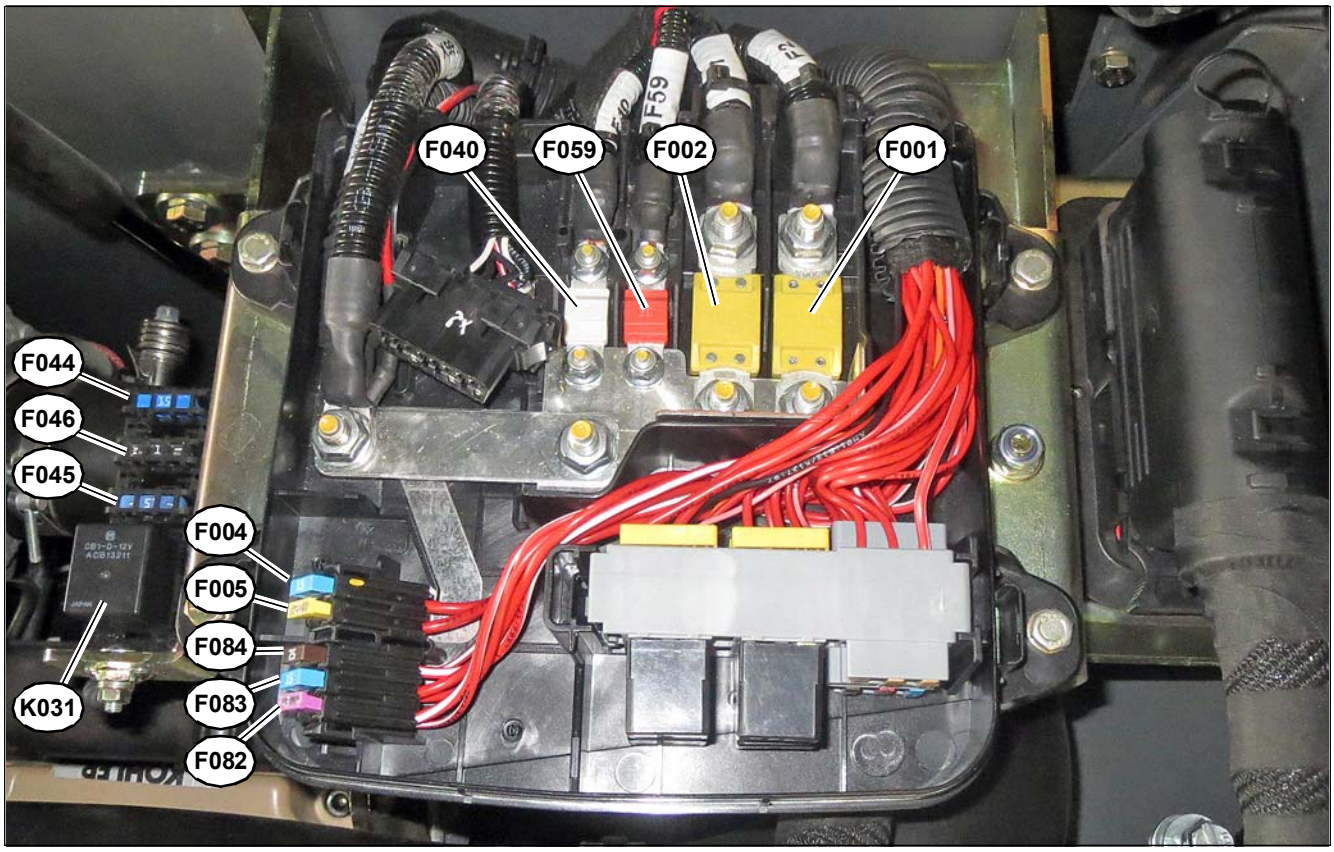

Switching relay no.	Protected circuit
K031	Fuel pre-heating relay

Fuse	Rated current (A)	Protected circuit
F001	100	Cabin terminal 15
F002	100	Cabin terminal 30
F004	15	Fuel pump
F005	20	ECU engine controller
F040	80	Control valve N004
F044	15	Fuel pre-heating
F045	15	Fuel pre-heating
F046	1	Fuel pre-heating
F059	30	14-pole front socket (US)
F082	3	Pressure relief of 3rd control circuit
F083	15	Diesel particulate filter
F084	7.5	Central lubrication system

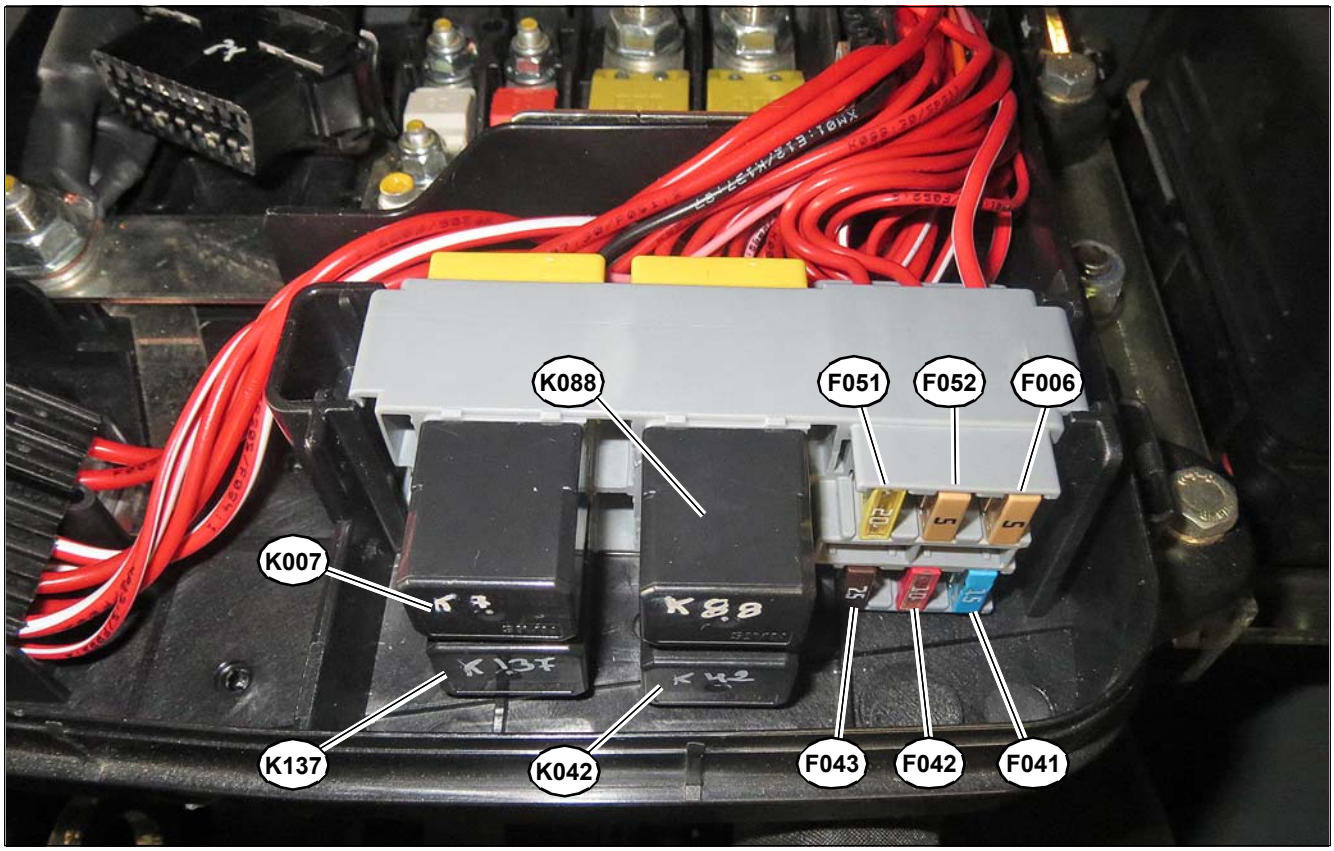

Switching relay no.	Protected circuit
K007	Start high-current relay
K042	Engine electronics switching relay
K088	Fuel pump switching relay
K137	Release DPF regeneration relay

Fuse	Rated current (A)	Protected circuit
F006	5	ECU terminal 30
F041	15	Traction electronics
F042	10	Control valve **N004**
F043	7.5	Ignition and starting switch **S001**
F051	20	Starter
F052	5	EGR valve

Switching relay no.	Protected circuit
K001	High-current relay

9.2 CAN signals

Overview: CAN signals

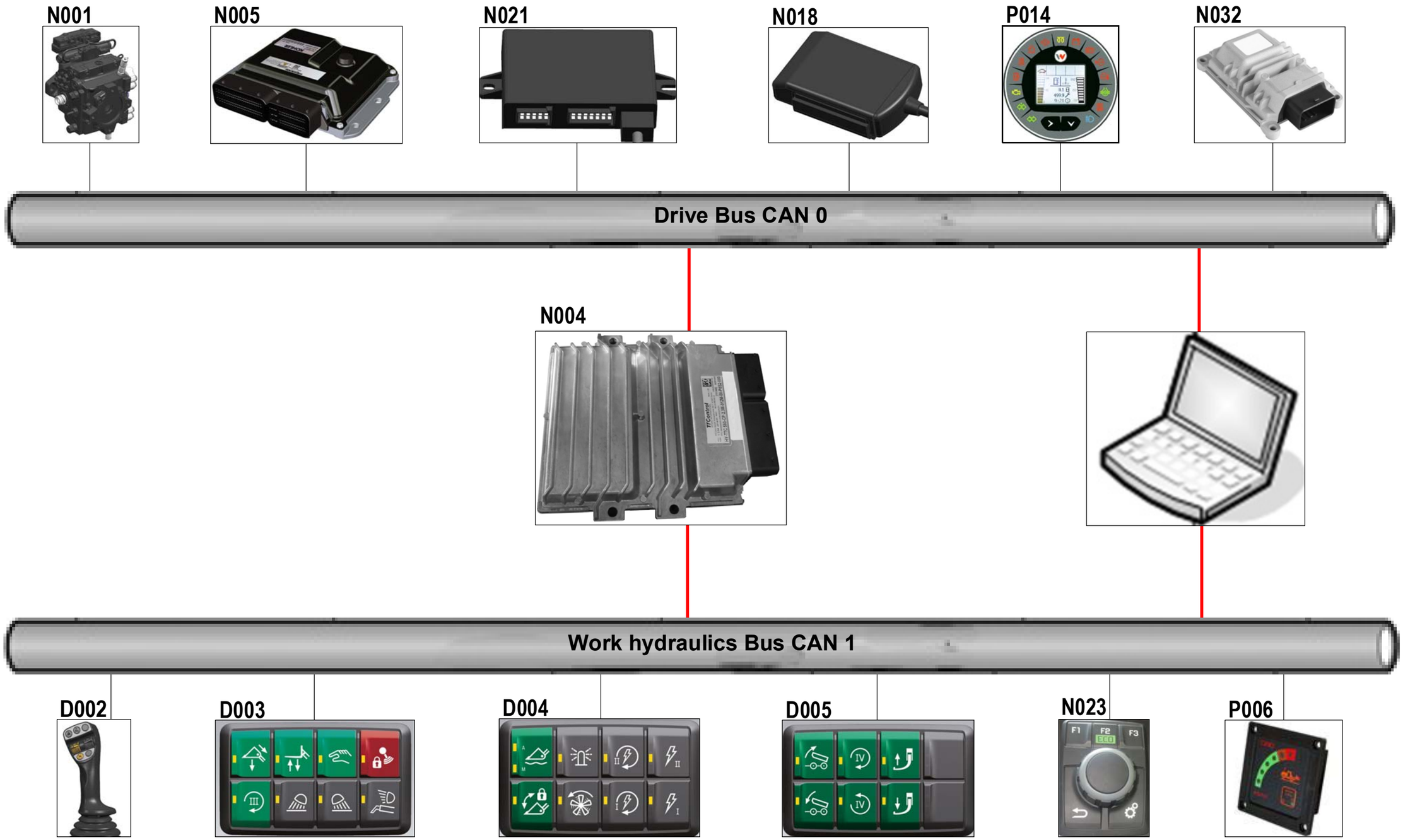

9.3 Description of CAN signal

Description of CAN 0 - drive

Component	Description
N001	Traction electronics H1-AC-Control
N005	Engine control unit
N018	Telematic module
N021	Immobiliser
N032	Front plug receptacle, 14-pole
P014	Indicating instrument

Description of CAN 1 signals - work hydraulics

Component	Description
D002	Joystick
D003	Keypad - standard
D004	Keypad - options
D005	Keypad - rear options
N004	Controller
N023	Oil volume setting
P006	Safe load indicator

Function description

CAN-BUS (Controller-Area-Network)

Data exchange between electrical components takes place via the CAN bus.

Storage of data and parameters

All performance data and parameters are stored in the modules. It is therefore advisable to transfer these data to the new module with the service tool before replacing a defective module (if possible).

Measurements in the CAN-BUS network

Voltages measured with the multimeter are effective voltages (Ueff). These are dependent on the measuring instrument and data transmission (bus load). The only allow a tendential assessment of the CAN BUS

Systems off (short circuit behaviour, open wiring).

9.4 In/outputs of traction electronics

Overview: inputs/outputs of traction electronics N001

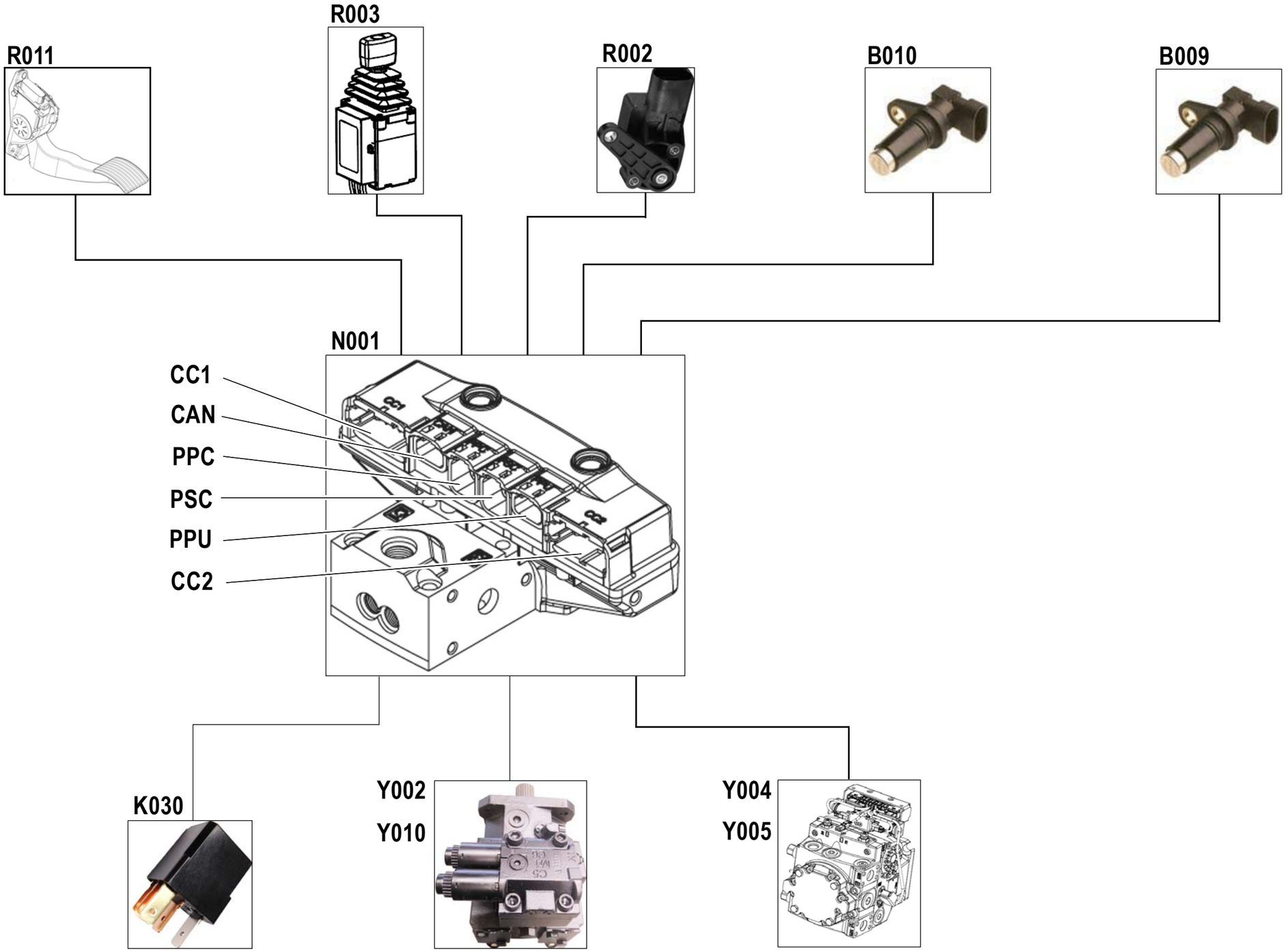

Component description, inputs/outputs traction electronics N001

Pos.	Component	Remarks
B009	Speed sensor	5 V
B010	Diesel engine speed sensor	5 V
K030	Brake lights switching relay	12 V
N001	Traction electronics	H1 AC control
R002	Inching angle of rotation sensor	5 V
R003	Creep gear potentiometer (option)	5 V
R011	Accelerator pedal	5 V
Y002	1st/2nd speed proportional valve	–
Y004	Reverse proportional valve	3,66 Ω
Y005	Forward proportional valve	3,66 Ω
Y010	Travel direction identification solenoid valve	Reverse driving energised 8,4 Ω

Pin assignment traction electronics N001, connector CC1

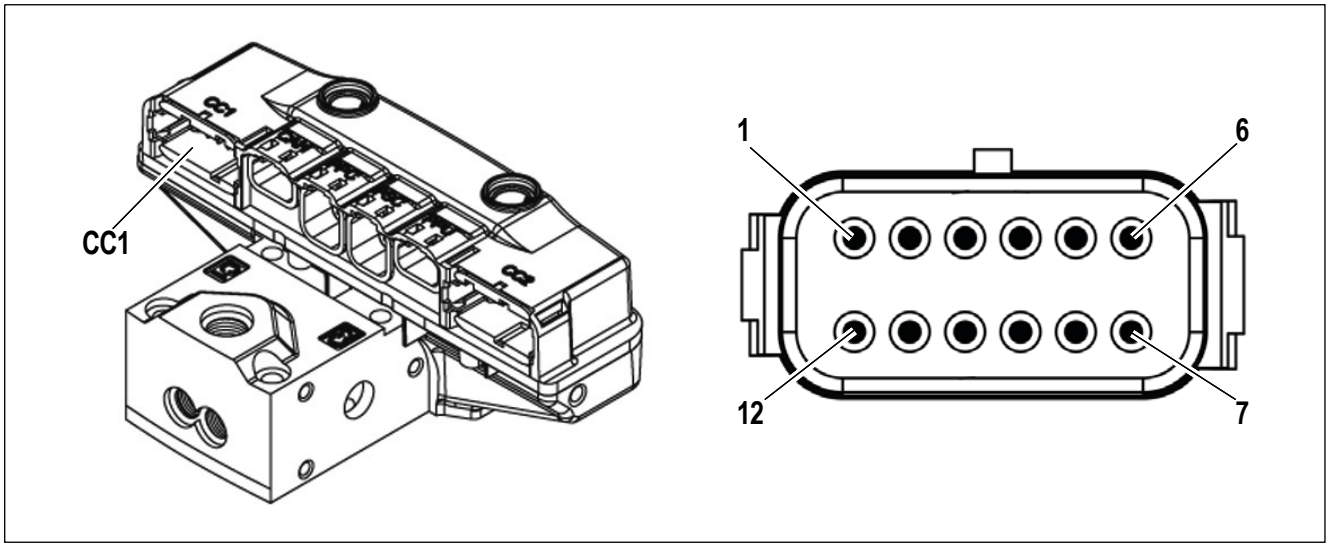

PIN	Measurand	Component (PIN)	Description
1	Vehicle ground		
2	Input on-board voltage	F041/15 A	K001/(87)
3	Output 5 V sensor	R003 (1, 4)	Creep gear potentiometer
4	Output ground sensor	R003 (3, 6)	Creep gear potentiometer
5	Signal 1 input (frequency)	B009 (1)	Speed sensor
6	–	–	–
7	–	–	–
8	Output 5 V sensor	B009 (4)	Speed sensor
9	Output ground sensor	B009 (5)	Speed sensor
10	Input signal	R003 (2)	Creep gear potentiometer
11	Input signal	R003 (5)	Creep gear potentiometer
12	–	–	–

Pin assignment traction electronics N001, connector CAN

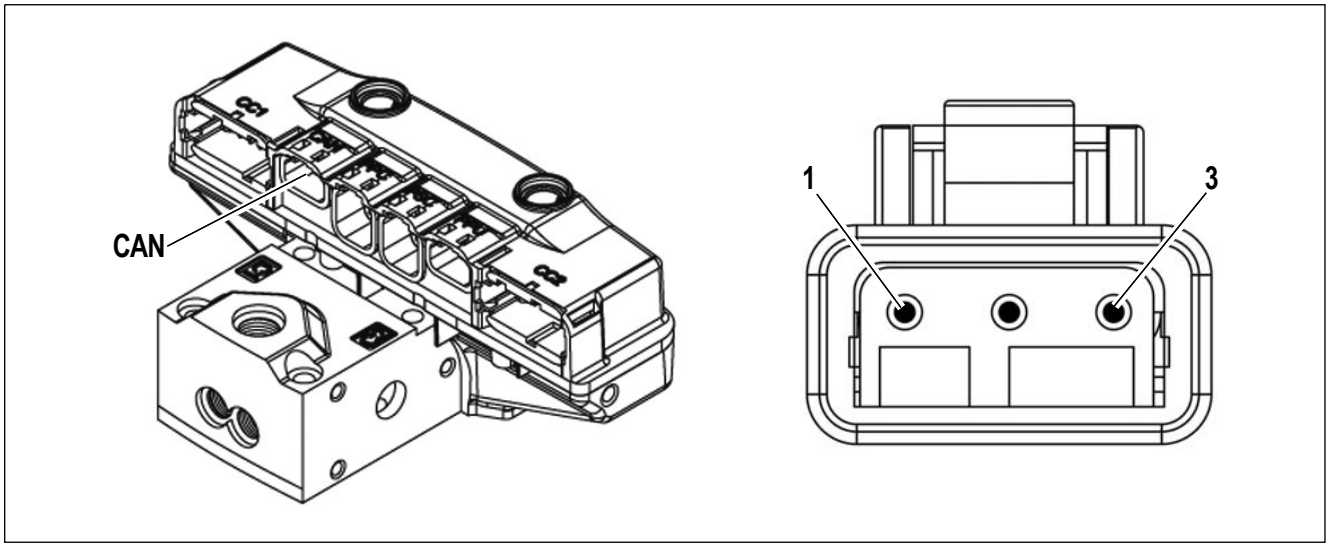

PIN	Cable colour	Measurand	Component (PIN)	Description
1	WH	CAN 0 High	–	Vehicle CAN 0
2	BK	CAN 0 Low	–	Vehicle CAN 0
3	–	–	–	–

Pin assignment traction electronics N001, connector PPC

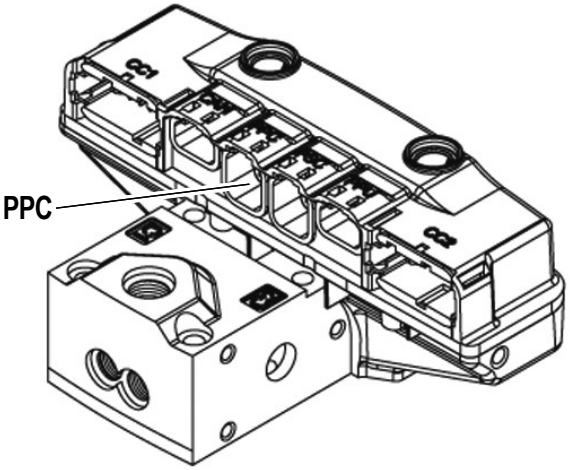

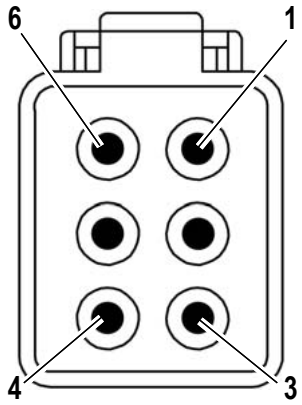

PIN	Measurand	Component (PIN)	Description
1	–	–	–
2	–	–	–
3	–	–	–
4	–	–	–
5	–	–	–
6	–	–	–

Pin assignment traction electronics N001, connector PSC

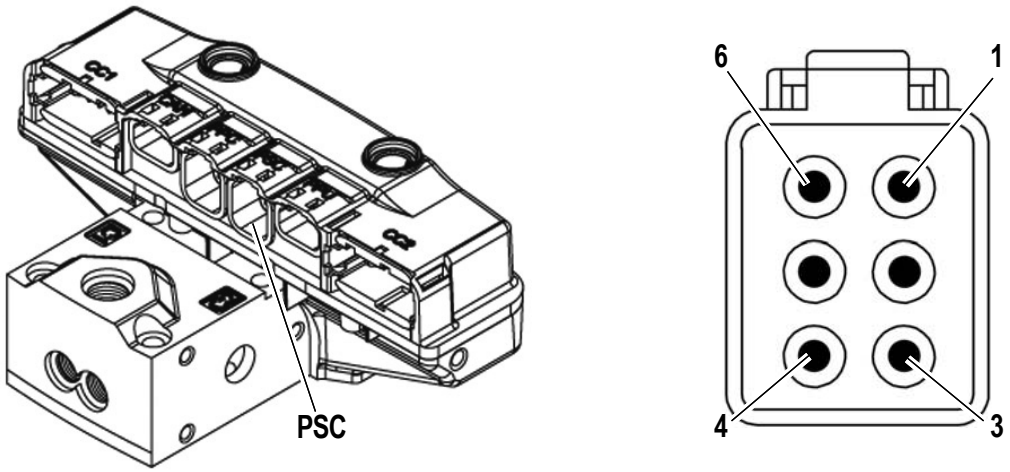

PIN	Measurand	Component (PIN)	Description
1	Output PWM	Y005 (2)	Forward proportional valve
2	Output PWM	Y004 (2)	Reverse proportional valve
3	Output 12 V	K003 (86)	Reverse machine travel switching relay
4	–	–	–
5	Input PWM	Y004 (1)	Reverse proportional valve
6	Input PWM	Y005 (1)	Forward proportional valve

Pin assignment traction electronics N001, connector PPU

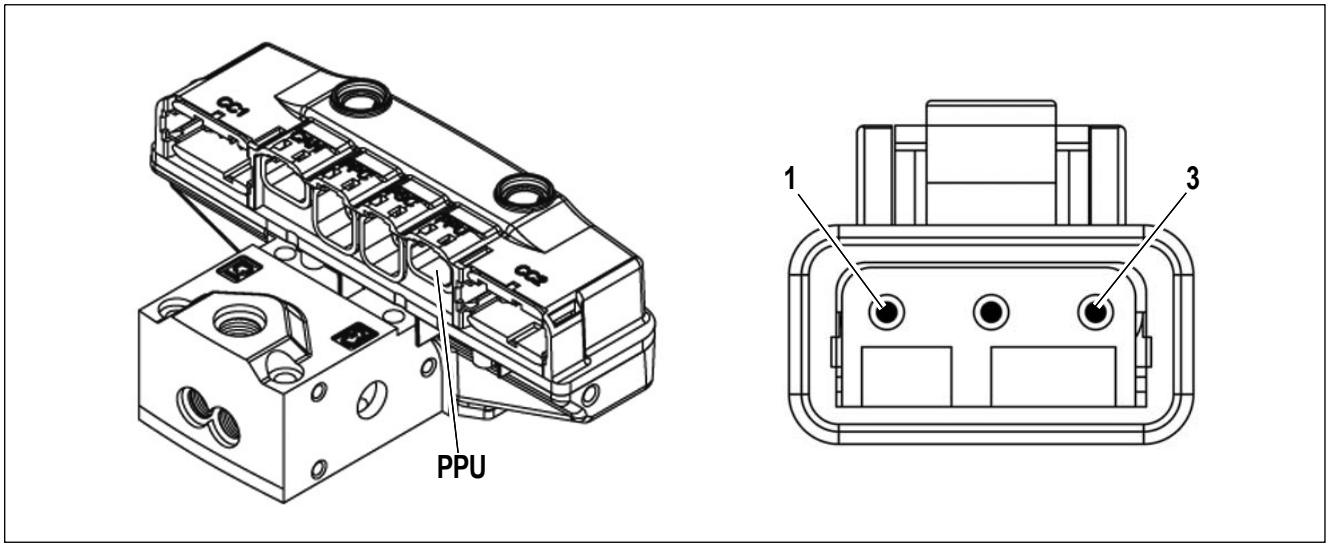

PIN	Measurand	Component (PIN)	Description
1	Output 5 V sensor	B010 (4)	Diesel engine speed sensor
2	Input frequency signal	B010 (3)	Diesel engine speed sensor
3	Output ground sensor	B010 (5)	Diesel engine speed sensor

Pin assignment traction electronics N001, connector CC2

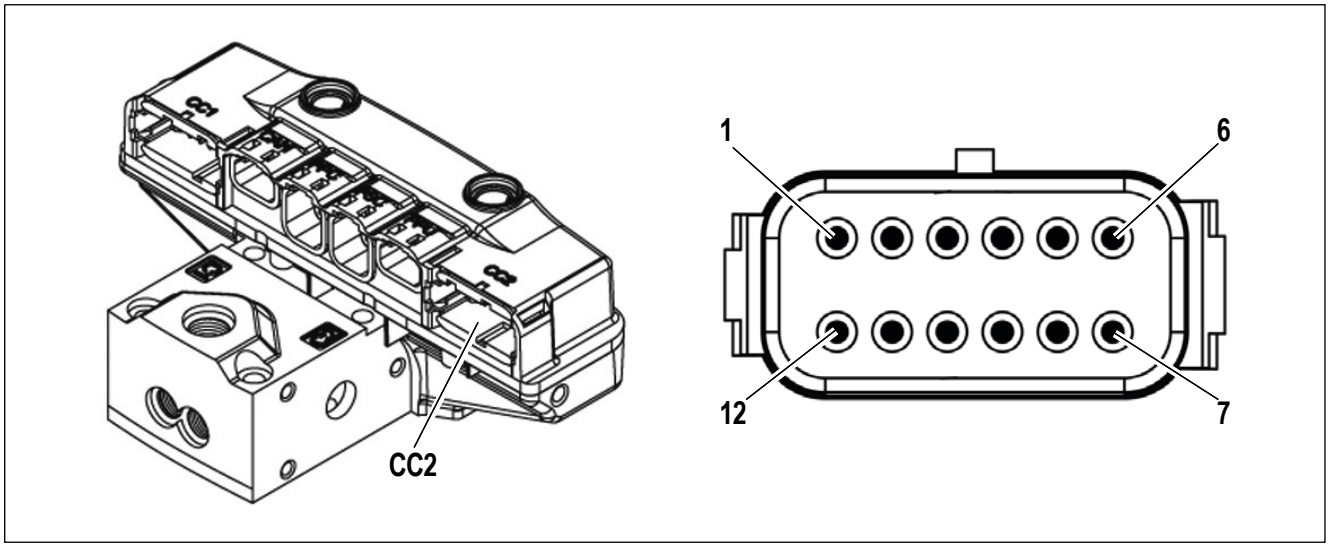

PIN	Measurand	Component (PIN)	Description
1	Input signal	R002 (5)	Inching angle of rotation sensor
2	–	–	–
3	Output PWM	Y002 (2)	1st/2nd speed proportional valve
4	Input signal	B009 (2)	Direction of rotation of variable displacement motor
5	Output 5 V sensor	R002 (1, 4)	Inching angle of rotation sensor
6	Output ground sensor	R002 (7, 8)	Inching angle of rotation sensor
7	Input signal	R002 (2)	Inching angle of rotation sensor
8	Output PWM	Y010 (2)	Solenoid valve Travel direction identification
9	Output ground	K030 (85)	Brake mini-switching relay
10	–	–	–
11	–	–	–
12	–	–	–

9.5 Inputs/outputs controller N004

Overview: inputs/outputs of controller N004

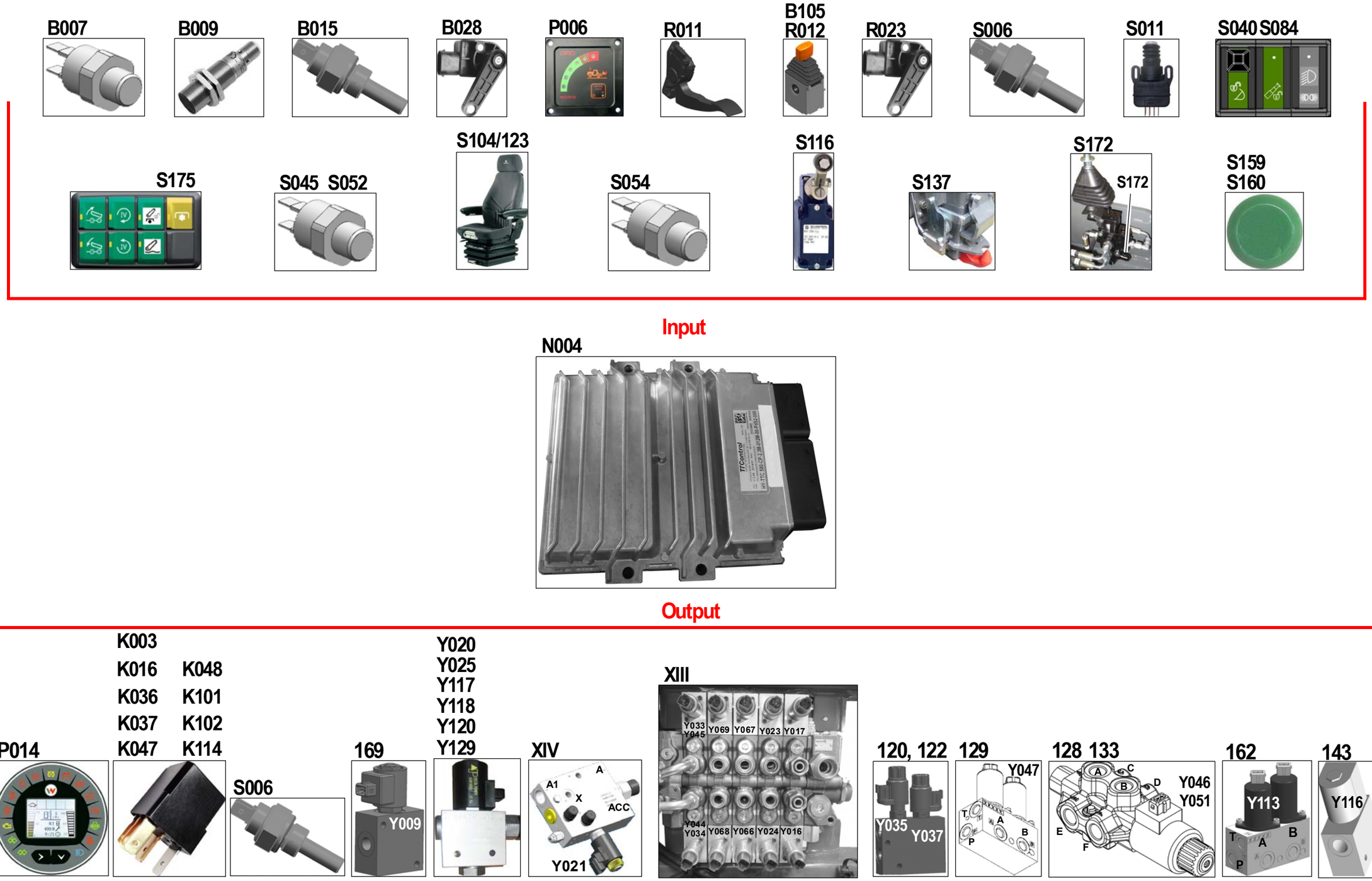

Description of inputs/outputs for controller N004

Pos.	Component	Remarks
B007	Hydraulic oil temperature sensor	GND
B009	Speed sensor	5 V
B015	Coolant level sensor	GND
B028	Tilt ram angle sensor	5 V
B105	Joystick, rear linkage three point	5 V
K003	Switching relay of reversing alarm	12 V
K016	7-pole front socket main relay	12 V
K036	Machine travel signals switching relay	12 V
K037	Machine travel signals switching relay	12 V
K047	Working light switching relay	12 V
K048	Working light switching relay	12 V
K101	7-pole front socket	12 V
K102	Step-by-step relay	12 V
K114	Rotating beacon	12 V
P006	Safe load indicator	12 V
R011	Accelerator pedal	5 V
R012	Manual throttle potentiometer	5 V
R023	Angle sensor of lifting arm	5 V
S011	Handbrake switch	12 V
S040	Push button for releasing quickhitch lock	5 V
S045	Load stabiliser pressure switch	12 V
S052	Air conditioning pressure switch	12 V
S054	Temp. climate switch	12 V
S084	Hydraulic function shut down	5 V
S104	Operator presence switch	12 V
S006	Temperature switch, hydraulic oil	12 V
S123	Belt	12 V
S137	Auto hitch sensor	5 V
S159	Raise push button	12 V
S160	Lower push button	12 V
S172	Steering mode lever limit switch (crab steering)	12 V
S175	On/off switch for PTO shaft (rear attachment)	5 V
Y009	Solenoid valve, differential lock	5,2 Ω
Y017	“Unlock” solenoid valve	PWM
Y020	Load stabiliser solenoid valve (lifting cylinder bottom side)	PWM
Y021	Load stabiliser solenoid valve (lifting cylinder rod side)	PWM
Y023	Proportional valve, retract telearm	PWM

Pos.	Component	Remarks
Y024	Proportional valve, extend telearm	PWM
Y025	Proportional valve, quick hitch system	12 V
Y033	Proportional valve (additional control circuit)	PWM
Y034	Proportional valve (additional control circuit)	PWM
Y035	Proportional valve, (reversing)	PWM
Y037	Reversing fan solenoid valve	12 V
Y044	Raise tipping trailer solenoid valve	PWM
Y045	Lower tipping trailer solenoid valve	PWM
Y046	Reversing valve of additional control circuit	12 V
Y047	Auto-Hitch unlock solenoid valve	12 V
Y051	Switch-over of front fourth service (lock/unlock)	12 V
Y066	Proportional valve (raise arm)	PWM
Y067	Proportional valve (lower arm)	PWM
Y068	Proportional valve (dump in)	PWM
Y069	Proportional valve (dump out)	PWM
Y113	Solenoid valve (hydraulic trailer brake)	PWM
Y116	Solenoid valve for lowering tipping trailer (black/white)	12 V
Y117	Solenoid valve (raise 3-point mount)	PWM
Y118	Solenoid valve (lower 3-point mount)	PWM
Y120	PTO shaft solenoid valve	PWM
Y129	Solenoid valve for rear hydraulics lowering mode	PWM

Pin assignment of plug 1 controller N004

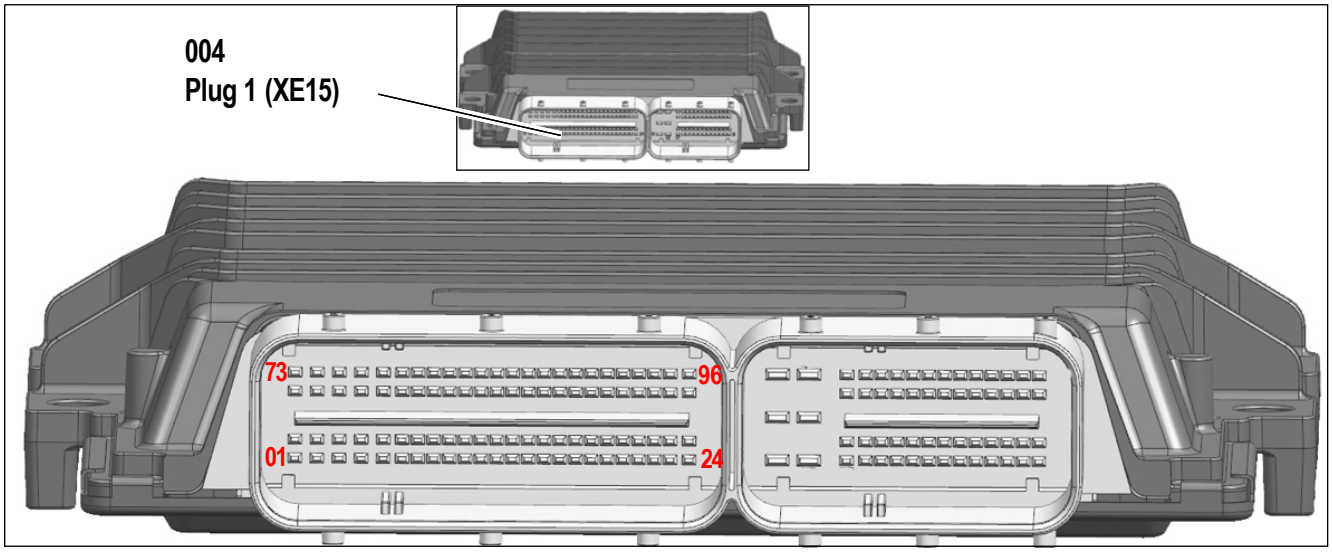

PIN	Input/output	Compo-nent	Description
1-01	–	–	–
1-02	–	–	–
1-03	–	–	–
1-04	Input of seat contact switch	S104 (5)	12 V Namur 122/510 Ω
1-05	Input lifting arm monitoring signal 1	R023 (2)	0.5 – 4.5 V
1-06	Input bucket repositioning signal 2	B028 (5)	4.5 – 0.5 V
1-07	Input touch button raise external rear hitch	S159 (2)	12 V Namur 18 k/3.6 kΩ
1-08	Input air-conditioning system push button switch	S052 (3)	12 V
1-09	Input (sensor) auto hitch up/locked	S137 (1)	12 V
1-10	Input, signal 1 accelerator pedal	R011 (2)	0.5 – 4.5 V
1-11	Input load pressure sensor triangle rear hitch	B102 (3)	0.5 – 4.5 V
1-12	Input switch PTO ON/OFF (rear hitch)	S175 (2)	12 V Namur 18 k/3.6 kΩ
1-13	Input joystick, rear hitch triangle	B105 (2)	5 V signal 1
1-14	Input hand gas signal 2	R012 (5)	0.5 – 4.5 V
1-15	Input belt (5 V)	S123 (B)	12 V Namur 18 k/3.6 kΩ
1-16	Input hydraulic function shut down active	S084 (1)	5 V
1-17	Input touch button quick hitch system inactive	S040 (1)	5 V
1-18	Earth input	–	–
1-19	Earth input	–	–
1-20	Earth input	–	–
1-21	Earth input	–	–
1-22	Input of overload warning device	P006 (3)	12 V (KI15)
1-23	Input hand-brake switch	S011 (4)	12 V
1-24	Input front socket switching relay	K101 (2)	12 V

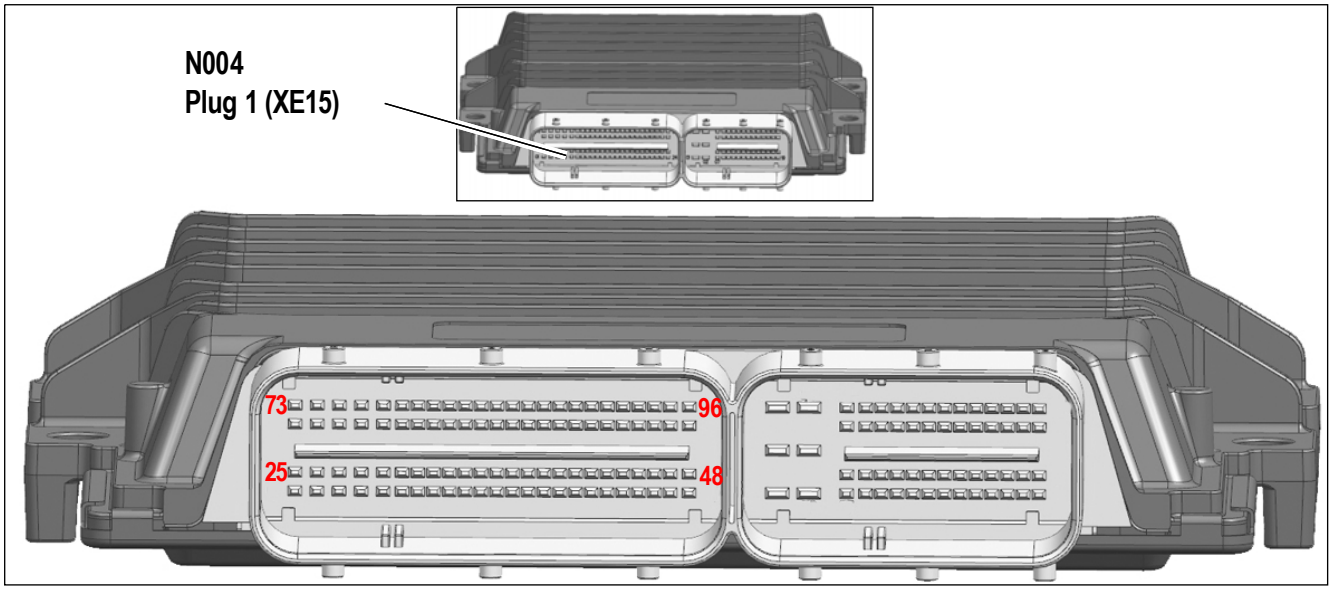

PIN	Input/output	Compo-nent	Description
1-25	–	–	–
1-26	–	–	–
1-27	Input fan control temperature sensor	B016 (1)	GND resistor 100 Ω
1-28	Input crab steering mode lever switch	S172 (2)	12 V Namur 18 k/3.6 kΩ
1-29	Input lifting arm monitoring signal 2	R023 (5)	0.5 – 4.5 V
1-30	Input bucket repositioning signal 1	B028 (2)	(0.5 - 4.5 V)
1-31	Input touch button lower external rear hitch	S160 (2)	12 V Namur 18 k/3.6 kΩ
1-32	Input front socket step-by-step relay	K102 (4)	12 V
1-33	Input (sensor) auto hitch not up/locked	S137 (2)	12 V (Signal 2)
1-34	Input sensor – accelerator pedal signal 2	R011 (5)	0.5 – 4.5 V
1-35	–	–	–
1-36	Input from load stabiliser push button switch	S045 (2)	12 V
1-37	Input joystick, rear hitch triangle	B105 (5)	5 V signal 2
1-38	Input hand gas signal 1	R012 (2)	5 V
1-39	Input of seat contact switch	S104 (4)	1.5 V – 5 V
1-40	Input hydraulic function shut down inactive	S084 (5)	5 V
1-41	Input touch button quick hitch system active	S040 (5)	5 V
1-42	Ground		
1-43	Input hand-brake switch	S011	Ground
1-44	Ground		
1-45	Ground		
1-46	–	–	–
1-47	Input hand-brake switch	S011 (3)	12 V
1-48	Input from coolant level sensor	B015 (C)	Signal

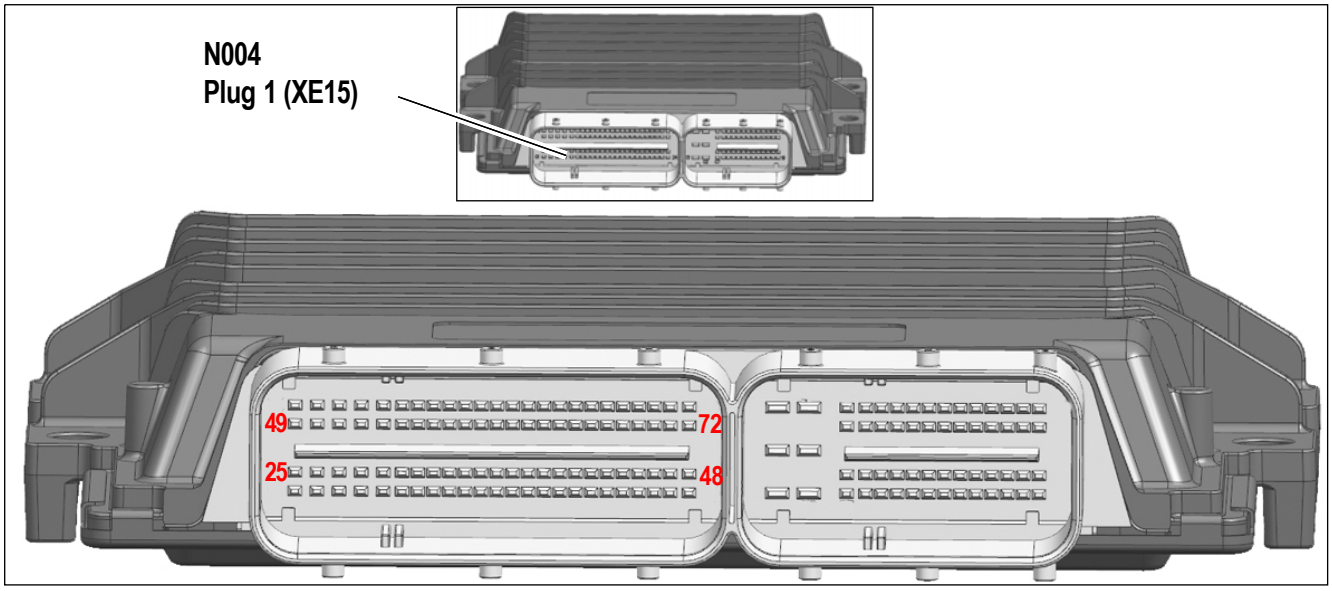

PIN	Input/output	Compo-nent	Description
1-49	Output to work lights switching relay	K048 (3)	12 V
1-50	Speed sensor Signal 1	B009 (3)	5 V
1-51	–	–	–
1-52	Output of oil temperature switch cooling	K049 (3)	12 V
1-53	–	–	–
1-54	Output lock quick change plate	Y016 (2)	PWM
1-55	Output 7-pole front socket	K101 (3)	12 V
1-56	Output load stabiliser solenoid valve	Y021 (2)	12 V
1-57	Output fan (reversing)	Y035 (2)	PWM
1-58	Output 7-pole front socket main relay	K016 (3)	12 V
1-59	Output reversing valve additional control circuit	Y046 (2)	12 V
1-60	Output solenoid valve hydraulic trailer brake	Y113 (2)	PWM
1-61	–	–	–
1-62	Output rear hydraulics lowering mode solenoid valve	Y129 (2)	PWM
1-63	Output fan reversal solenoid valve	Y037 (2)	12 V
1-64	–	–	–
1-65	Output proportional valve, retract telearm	Y023 (2)	PWM
1-66	Output unlock auto hitch solenoid valve	Y047 (2)	12 V
1-67	Output control lamp for bucket repositioning	H083	CAN
1-68	Output lower proportional valve	Y067 (2)	PWM
1-69	–	–	–
1-70	–	–	–
1-71	Output empty shovel proportional valve	Y069 (2)	PWM
1-72	Output lower rear hitch solenoid valve (inner)	Y118 (2)	PWM

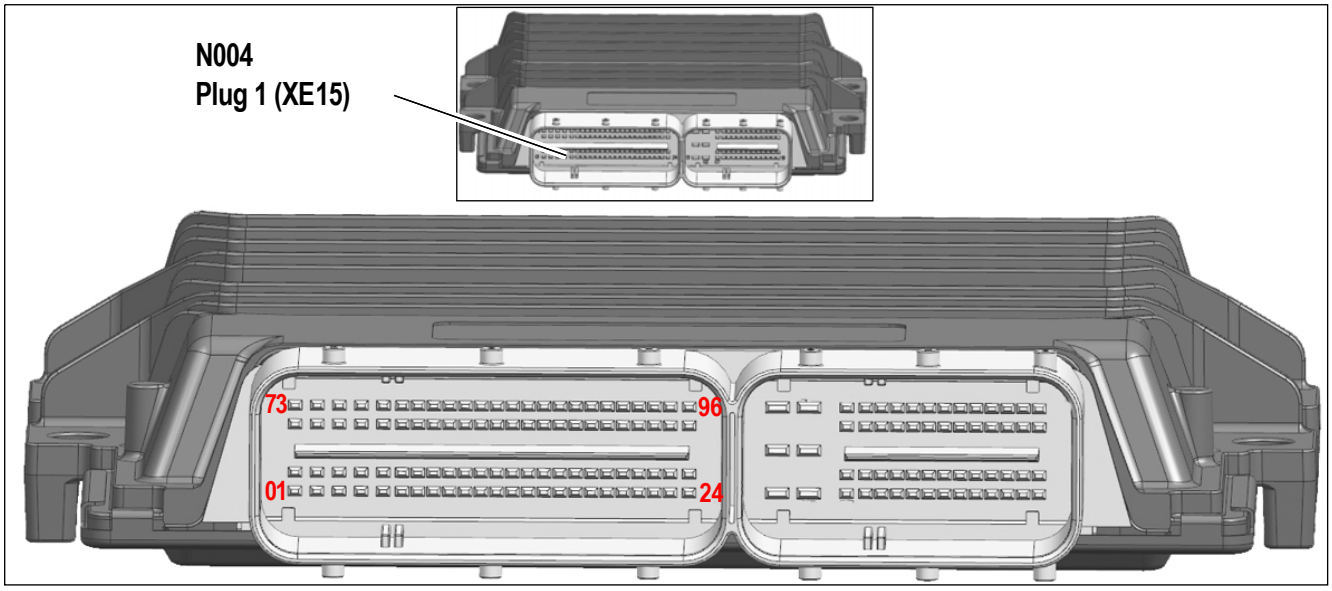

PIN	Input/output	Component	Description
1-73	Output to work lights switching relay	K047 (3)	12 V
1-74	–	–	–
1-75	–	–	–
1-76	Output rotating beacon	K114 (3)	12 V
1-77	Output load stabiliser solenoid valve	Y020 (2)	12 V
1-78	Output unlock proportional valve	Y017 (2)	PWM
1-79	Output step-by-step relay touch button	K102 (3)	12 V
1-80	–	–	–
1-81	Output solenoid valve (lower tipper)	Y116 (2)	12 V
1-82	Output to solenoid valve for differential lock	Y009 (2)	12 V
1-83	Output to proportional valve of additional control circuit	Y033 (2) Y044 (2)	PWM
1-84	Output to solenoid valve for quick hitch lock	Y025 (2)	12 V
1-85	Output control reverse travel direction	H017	CAN
1-86	Output to proportional valve of additional control circuit	Y034 (2) Y045 (2)	PWM
1-87	–	–	–
1-88	Output to drive signal switching relay	K036/037	12 V
1-89	Output proportional valve, extend telearm	Y024 (2)	PWM
1-90	Output of switch-over of front 4th service	Y051 (2)	12 V
1-91	–	–	–
1-92	Output of proportional valve (raise arm)	Y066 (2)	PWM
1-93	Output to solenoid valve for PTO	Y120 (2)	PMW
1-94	–	–	–
1-95	Output to proportional valve for filling shovel	Y068 (2)	PWM
1-96	Output raise rear hitch solenoid valve (inner)	Y117 (2)	PWM

Pin assignment of plug 2 controller N004

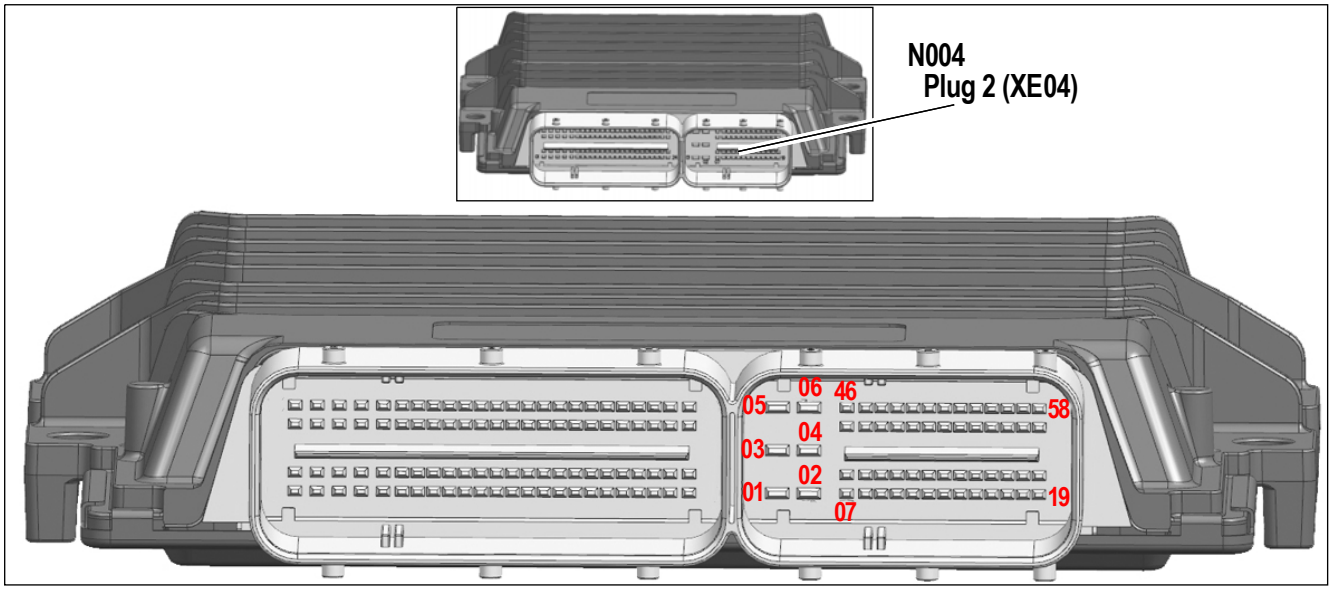

PIN		Input/output	Component	Description
2-01		Input on-board voltage	F040/80 A	12 V
2-02		Input on-board voltage	F040/80 A	12 V
2-03		Input on-board voltage	F040/80 A	12 V
2-04		Input on-board voltage	F040/80 A	12 V
2-05		Input on-board voltage	F040/80 A	12 V
2-06		Input on-board voltage	F040/80 A	12 V
2-07		Input clamp 15	F081/3 A	12 V
2-08		–	–	–
2-09		CAN 0	–	LOW
2-10		CAN 1	–	LOW
2-11		–	–	–
2-12		–	–	–
2-13		–	–	–
2-14		–	–	–
2-15		–	–	–
2-16		–	–	–
2-17		GND 1 sensor		
2-18		–	–	–
2-19		–	–	–

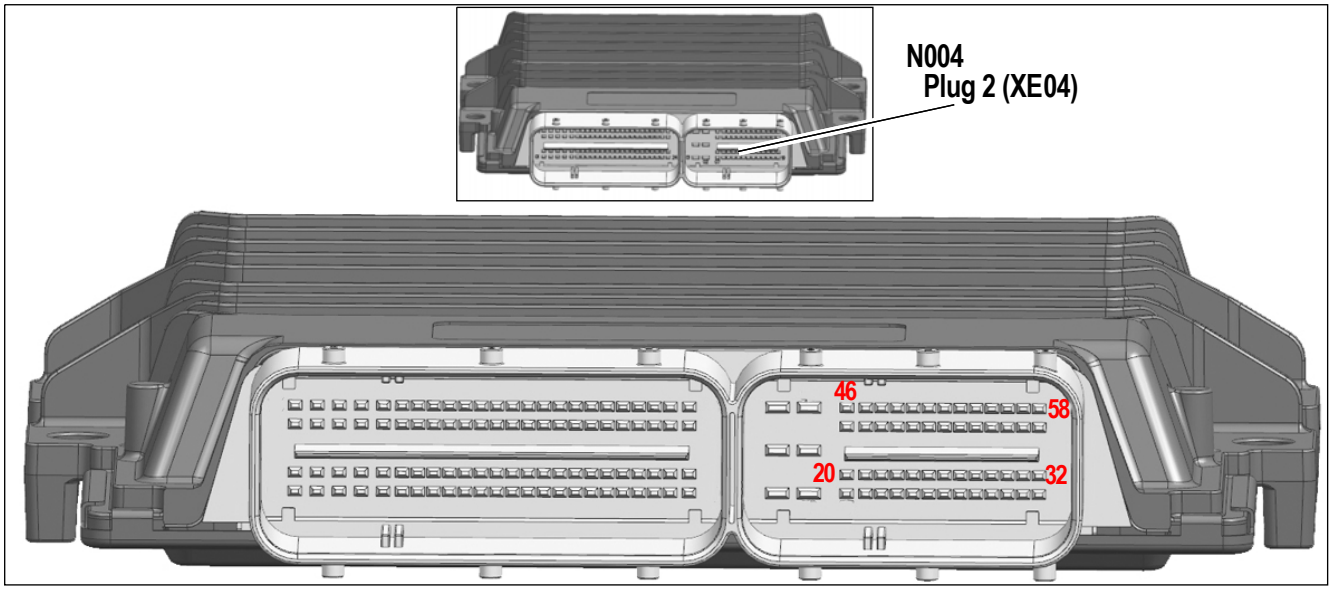

PIN	Input/output	Component	Description
2-20	–	–	–
2-21	Output sensor voltage	–	5 V
2-22	CAN 0	–	High
2-23	CAN 1	–	High
2-24	–	–	–
2-25	–	–	–
2-26	–	–	–
2-27	–	–	–
2-28	–	–	–
2-29	–	–	–
2-30	GND 2 sensor		
2-31	–	–	–
2-32	–	–	–

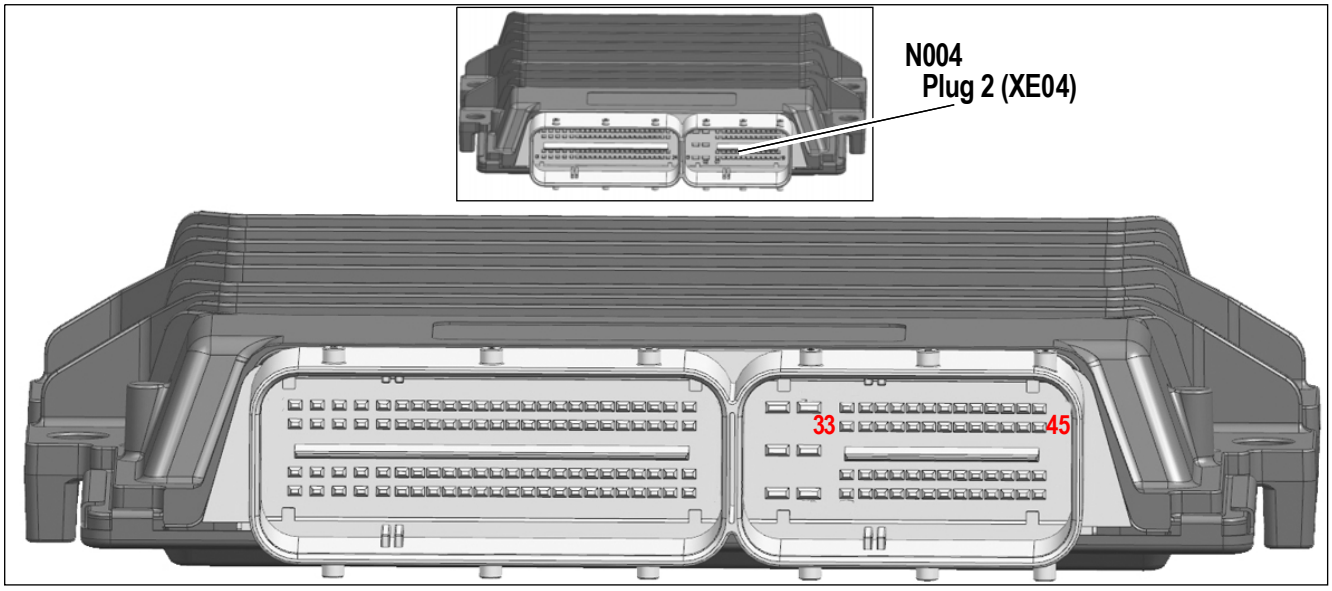

PIN	Input/output	Component	Description
2-33	–	–	–
2-34	Output sensor voltage	–	5 V
2-35	CAN 0	–	–
2-36	CAN 1	–	–
2-37	–	–	–
2-38	Output limit switch (telearm retracted)	S116 (4)	5 V
2-39	–	–	–
2-40	–	–	–
2-41	–	–	–
2-42	–	–	–
2-43	GND sensor	B016 (2)	Ground
2-44	GND sensor	S104 (4)	Ground
2-45	GND sensor	R011 (3)	Ground

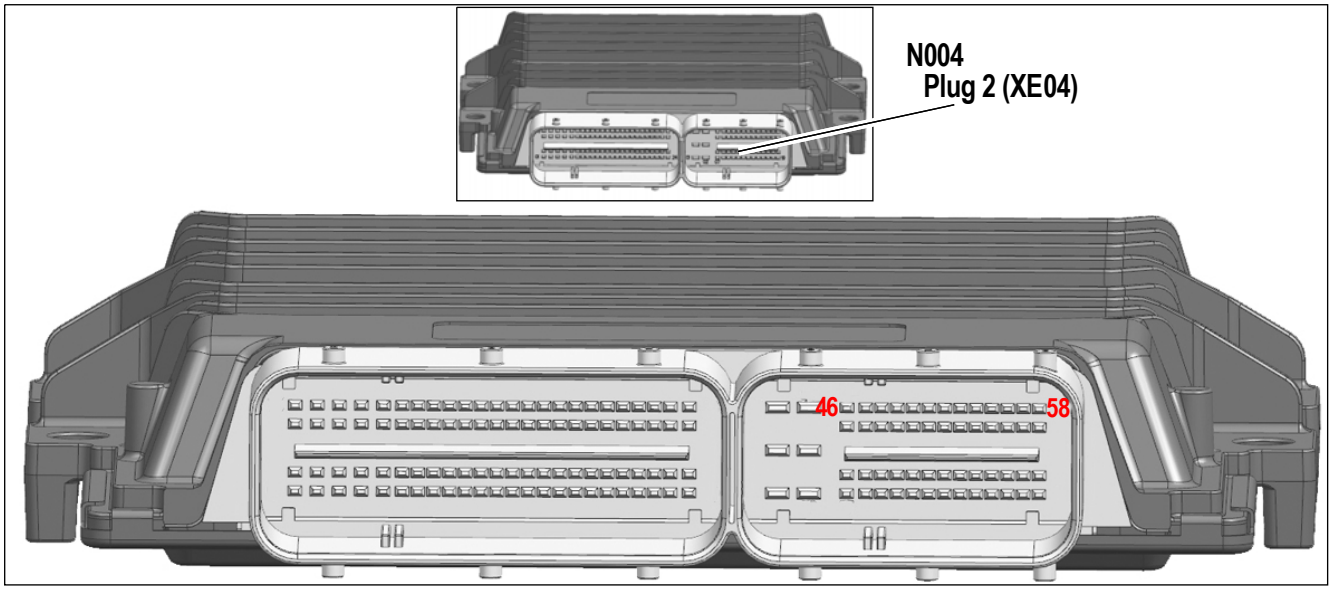

PIN	Input/output	Component	Description
2-46	On-board voltage	–	12 V
2-47	Output sensor voltage	–	5 V
2-48	CAN 0	–	–
2-49	CAN 1	–	–
2-50	–	–	–
2-51	Output limit switch (telearm retracted)	S116 (2)	5 V
2-52	–	–	–
2-53	–	–	–
2-54	–	–	–
2-55	–	–	–
2-56	GND sensor		
2-57	GND sensor		
2-58	GND sensor		

9.6 Inputs/outputs for diesel engine electronics N005

Overview: inputs/outputs for diesel engine electronics N005

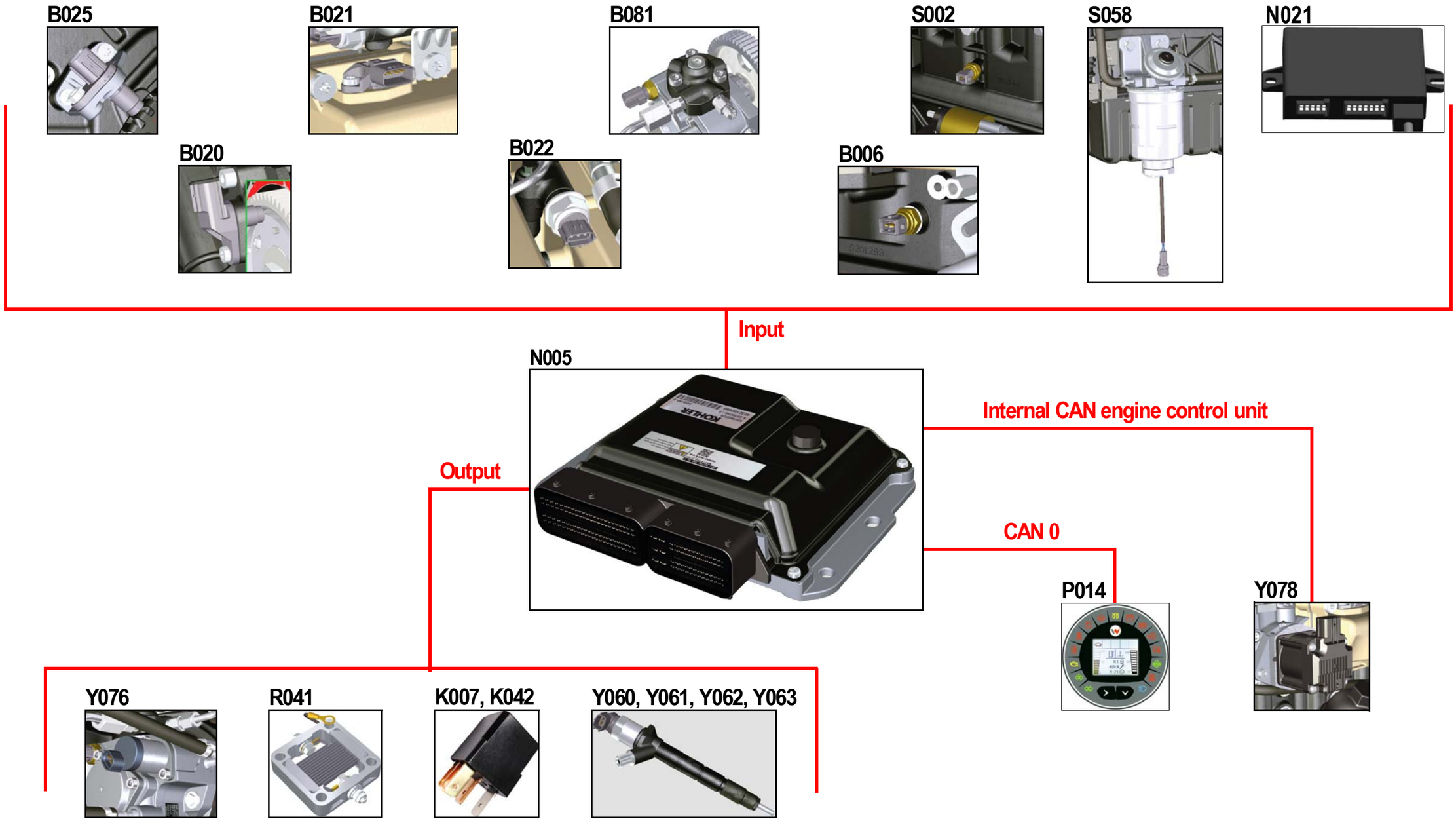

Description of inputs/outputs for engine control unit N005

Pos.	Component	Remarks
B006	Engine temperature sensor	–
B020	Camshaft speed sensor	–
B021	T-MAP sensor	–
B022	Rail pressure sensor	–
B025	Crankshaft speed sensor	–
B081	Fuel temperature sensor	–
K007	Starting relay	12 V/20/35 A
K042	Engine electronics switching relay	12 V/20/35 A
N005	Diesel engine electronics	Kohler
N021	Immobiliser	CAN
P014	Indicating instrument	Bauser
R041	Air intake panel heater	–
S002	Engine oil pressure switch	–
S058	Water separator switch	–
Y060	Injector 1	–
Y061	Injector 2	–
Y062	Injector 3	–
Y063	Injector 4	–
Y076	Rail pressure feed solenoid valve	–
Y078	EGR valve	CAN

Pin assignment of plug A engine control unit N005

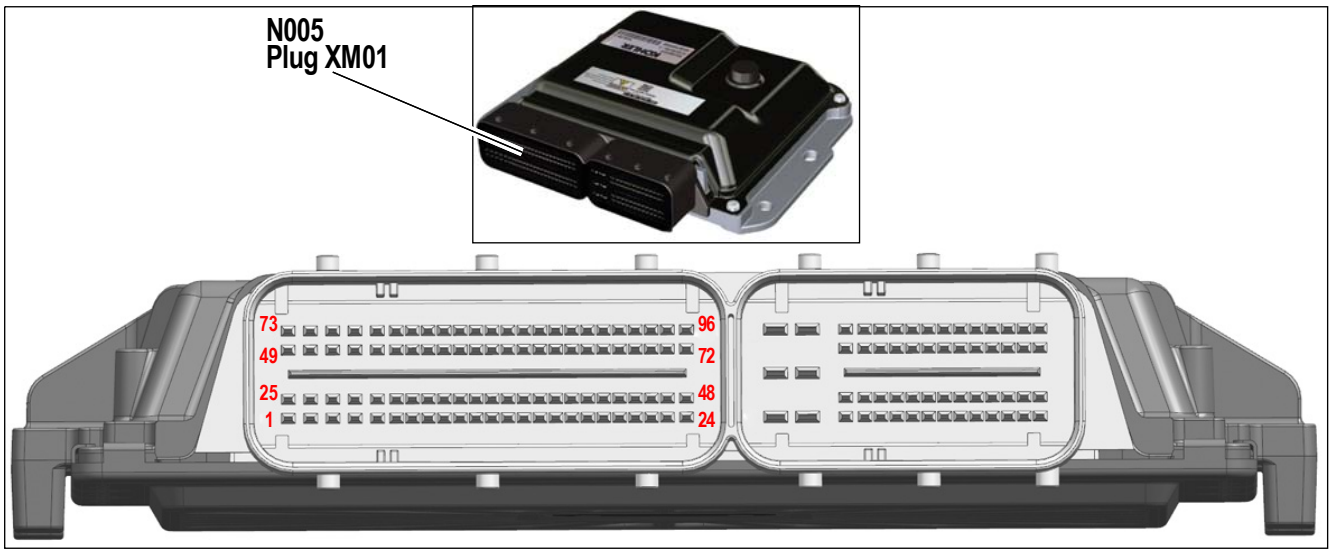

PIN	Input/output	Component	Description
1	–	–	–
2	–	–	–
3	Output of injector 2	Y061 (2)	Signal
4	–	–	–
5	–	–	–
6	–	–	–
7	Input of engine temperature sensor, fuel temperature sensor	B006 (2) B081 (2)	Sensor ground
8	–	–	–
9	–	–	–
10	–	–	–
11	–	–	–
12	–	–	–
13	–	–	–
14	Signal T-MAP sensor	B021 (2)	Signal
15	–	–	–
16	Signal, rail pressure sensor	B022 (1)	Signal
17	–	–	–
18	Signal, camshaft speed sensor	B020 (2)	Signal
19	Signal, crankshaft speed sensor	B025 (2)	Signal
20	–	–	–
21	–	–	–
22	–	–	–
23	Signal T-MAP sensor	B021 (3)	Signal
24	Signal, camshaft speed sensor	B020 (3)	Signal

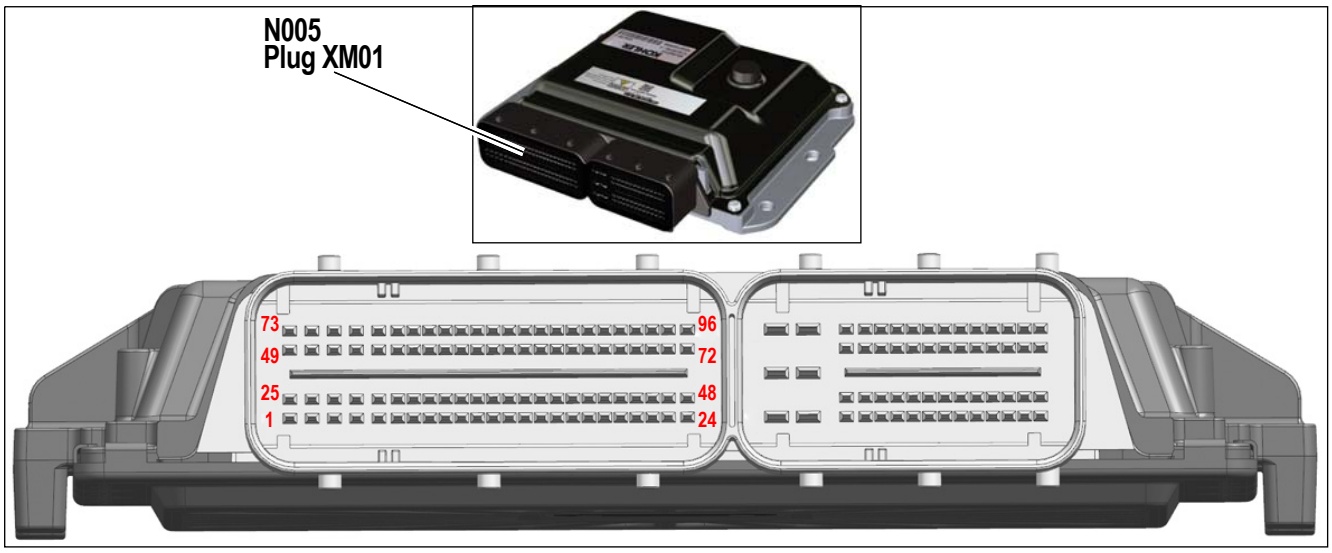

PIN	Input/output	Compo-nent	Description
25	–	–	–
26	Output of injector 3	Y062 (2)	Signal
27	–	–	–
28	–	–	–
29	–	–	–
30	–	–	–
31	Input of fuel temperature sensor	B081 (1)	Signal
32	–	–	–
33	–	–	–
34	–	–	–
35	–	–	–
36	–	–	–
37	–	–	–
38	Signal T-MAP sensor	B021 (4)	Signal
39	Output of engine temperature sensor	B006 (1)	Signal
40	Input of rail pressure sensor	B022 (2)	Sensor ground
41	Input of rail pressure sensor	B022 (2)	Sensor ground
42	Signal, camshaft speed sensor	B020 (1)	Signal
43	Signal, crankshaft speed sensor	B025 (1)	Signal
44	–	–	–
45	Signal, rail pressure sensor	B022 (3)	Signal
46	Signal, crankshaft speed sensor	B025 (3)	Signal
47	–	–	–
48	–	–	–

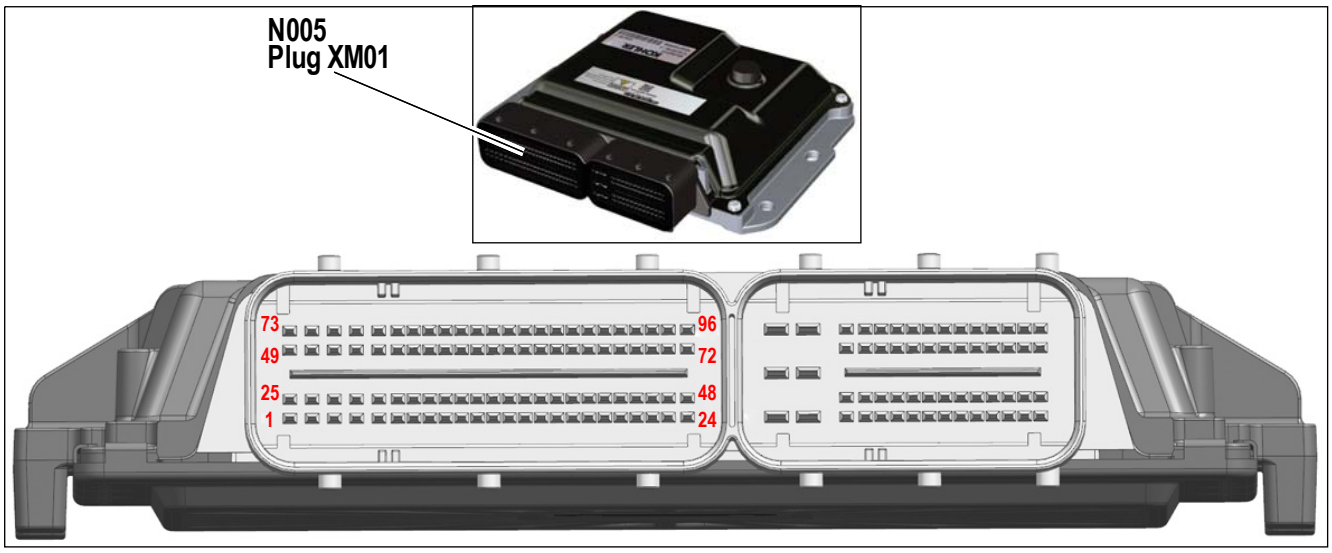

PIN	Input/output	Component	Description
49	Input of injector 1-4	Y060 (1) Y061 (1) Y062 (1) Y063 (1)	Sensor ground
50	–	–	–
51	Output injector 4	Y063 (2)	Signal
52	–	–	–
53	–	–	–
54	–	–	–
55	–	–	–
56	–	–	–
57	–	–	–
58	–	–	–
59	–	–	–
60	–	–	–
61	Signal T-MAP sensor	B021 (1)	Signal
62	–	–	–
63	Output to rail pressure supply solenoid valve	Y076 (2)	Signal
64	–	–	–
65	–	–	–
66	–	–	–
67	–	–	–
68	–	–	–
69	–	–	–
70	–	–	–
71	Output from air intake surface heater	R041	Signal
72	–	–	–

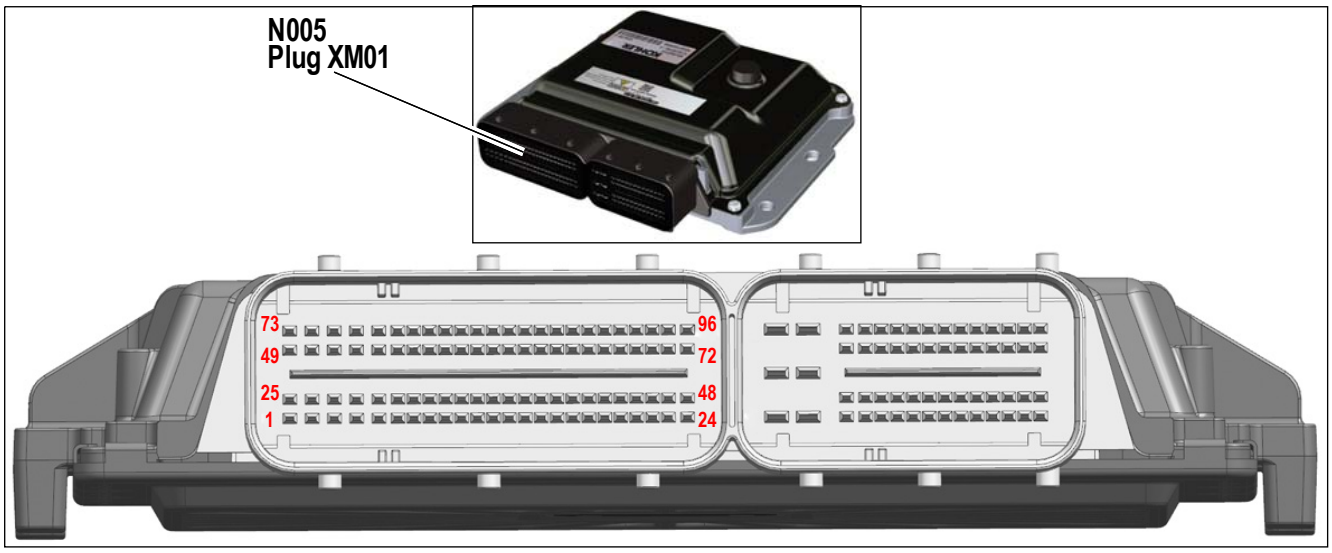

PIN	Input/output	Component	Description
73	Input of injector 1-4	Y060 (1) Y061 (1) Y062 (1) Y063 (1)	Sensor ground
74	Output of injector 1	Y060 (2)	Signal
75	–	–	–
76	–	–	–
77	–	–	–
78	Input from water separator switch	S058 (2)	Signal
79	–	–	–
80	–	–	–
81	–	–	–
82	–	–	–
83	–	–	–
84	–	–	–
85	–	–	–
86	–	–	–
87	–	–	–
88	–	–	–
89	–	–	–
90	–	–	–
91	Output to start relay	K007 (30)	Signal
92	–	–	–
93	–	–	–
94	–	–	–
95	–	–	–
96	–	–	–

Pin assignment of plug B engine control unit N005

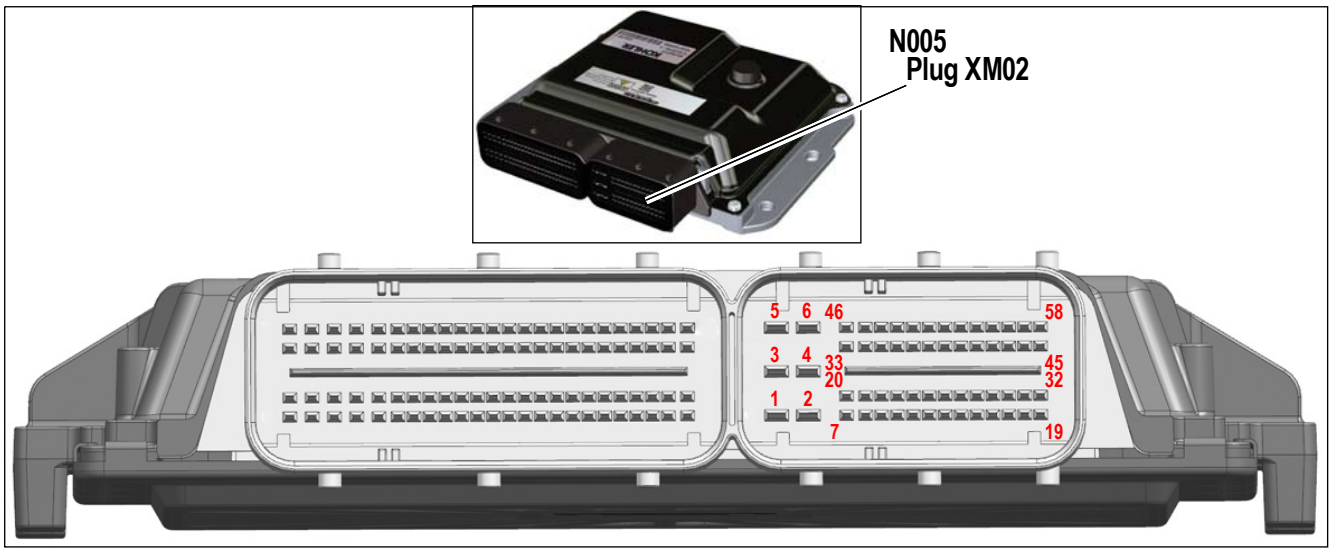

PIN	Input/output	Component	Description
1	Ground	–	–
2	Ground	–	–
3	Ground	–	–
4	Ground	–	–
5	On-board voltage	–	12 V
6	On-board voltage	–	12 V
7	Output to rail pressure supply solenoid valve	Y076 (2)	Signal
8	–	–	–
9	–	–	–
10	–	–	–
11	–	–	–
12	–	–	–
13	–	–	–
14	–	–	–
15	–	–	–
16	–	–	–
17	–	–	–
18	Earthing (housing)	–	–
19	–	–	–

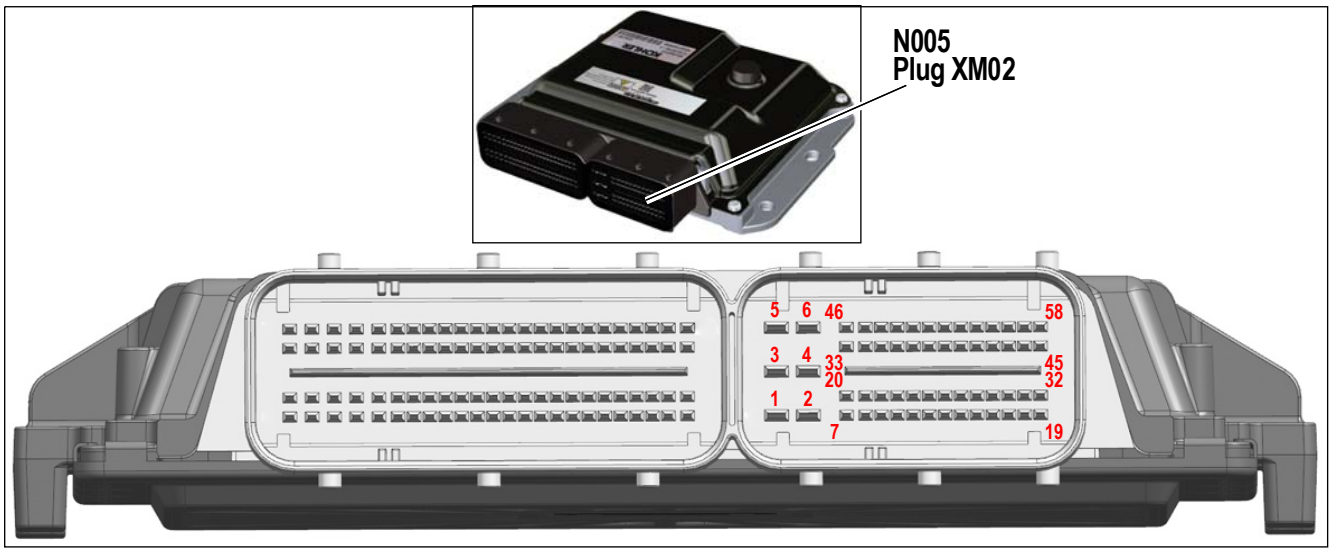

PIN	Input/output	Component	Description
20	Input from rail pressure supply solenoid valve	Y076 (1)	Signal
21	–	–	–
22	–	–	–
23	–	–	–
24	–	–	–
25	–	–	–
26	–	–	–
27	–	–	–
28	–	–	–
29	–	–	–
30	–	–	–
31	–	–	–
32	–	–	–

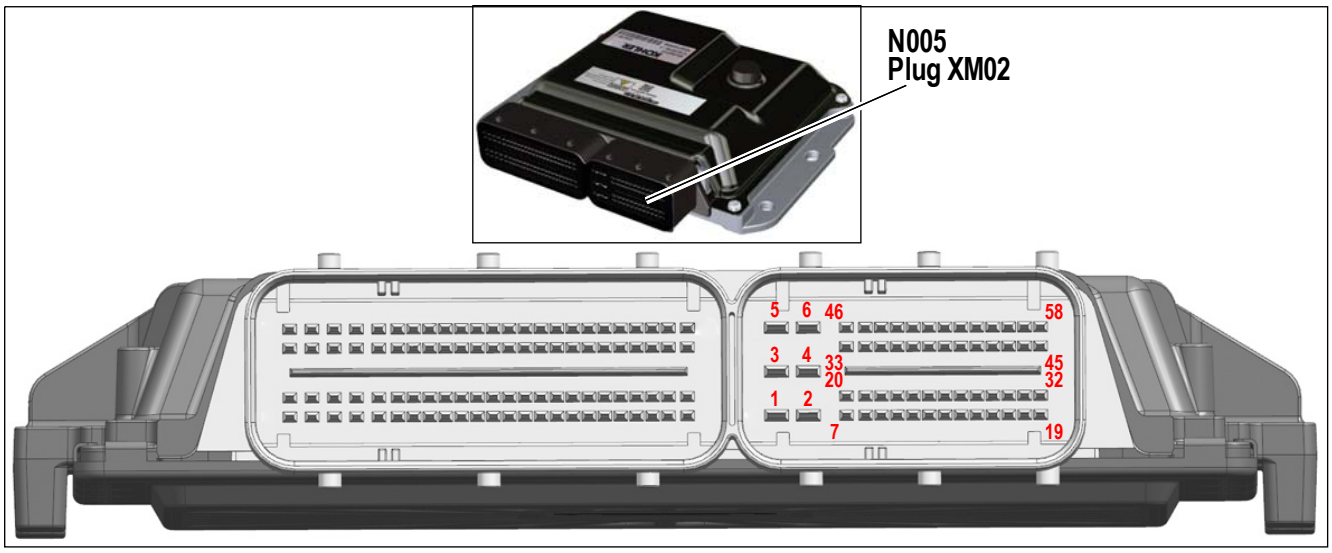

PIN	Input/output	Component	Description
33	Output to motor electronics switching relay	K042 (85)	Signal
34	Output to motor electronics switching relay	K042 (85)	Signal
35	–	–	–
36	–	–	–
37	–	–	–
38	CAN 0 High	–	–
39	CAN 0 Low	–	–
40	Input from engine oil push button switch	S002 (2)	Signal
41	–	–	–
42	–	–	–
43	–	–	–
44	–	–	–
45	–	–	–

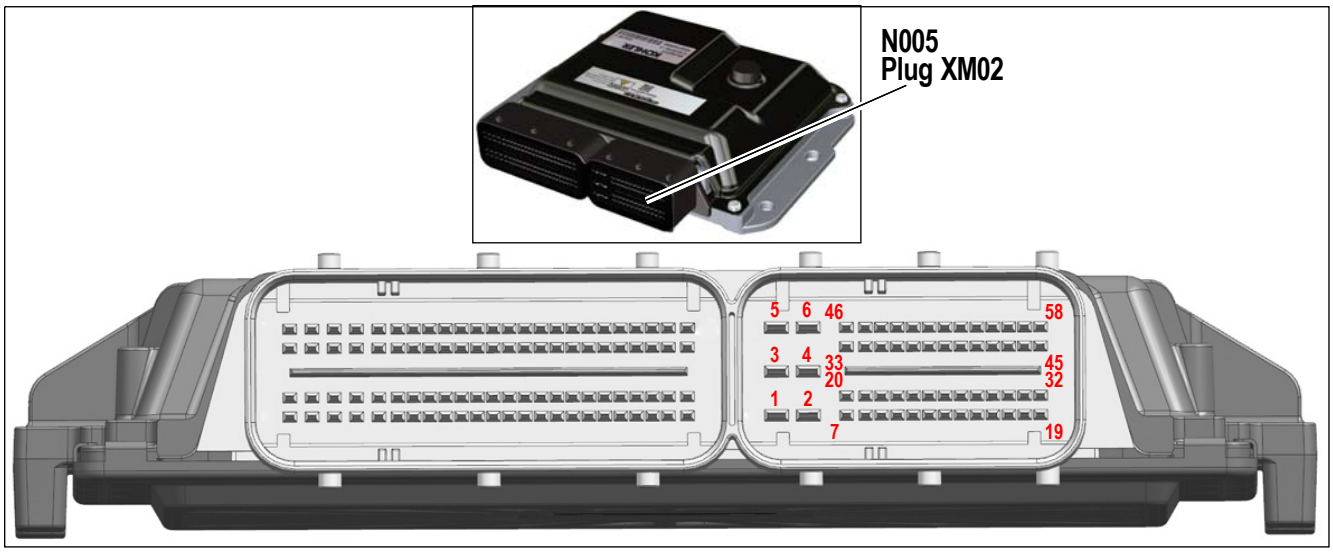

PIN	Input/output	Component	Description
46	On-board voltage	–	12 V
47	Input from drive interlock	N021 (4)	12 V
48	Input from drive interlock	N021 (4)	12 V
49	–	–	–
50	–	–	–
51	Internal engine CAN EGR valve	Y078 (5)	–
52	Internal engine CAN EGR valve	Y078 (2)	–
53	–	–	–
54	Input from drive interlock	N021 (2)	12 V
55	–	–	–
56	–	–	–
57	–	–	–
58	–	–	–

9.7 Control of telematics

Overview: control of telematics

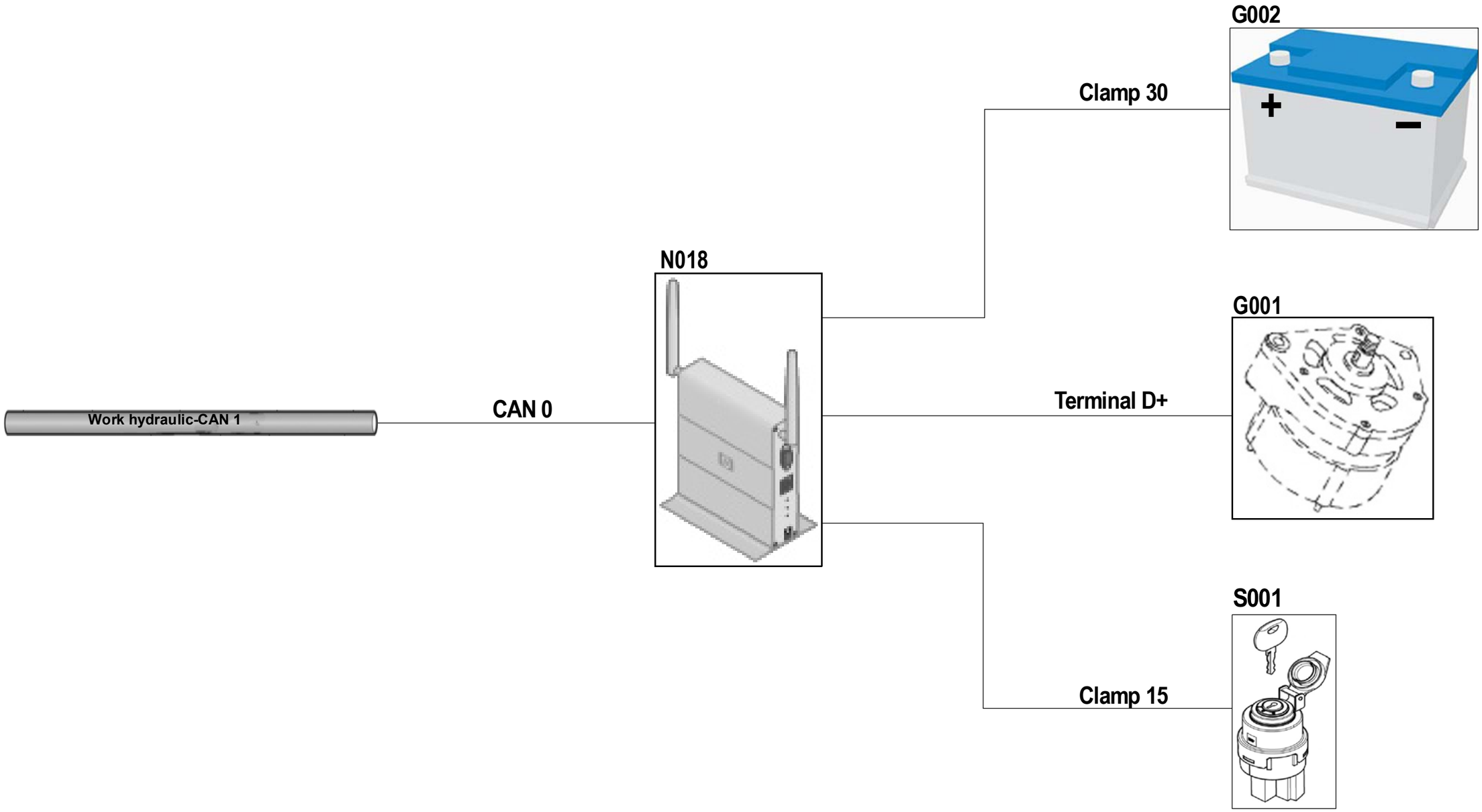

Element description of telematics module N018

Component	Description
G001	Alternator
G002	Battery
N018	Telematics module
S001	Starter

Pin assignment of telematics module N018

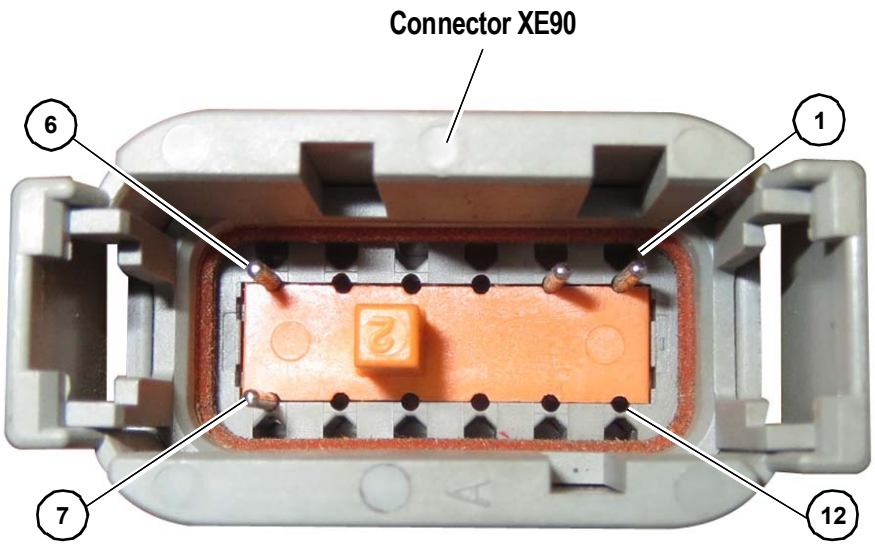

PIN	Cable colour	Measurand	Component	Description
1	BK	Ground	–	Vehicle cabin ground
2	WH	CAN 0 High	N004 (222) N004 (248)	Drive - CAN
3	–	–	–	–
4	BK	CAN 0 LOW	N004 (209) N004 (235)	Drive - CAN
5	RD	Alternator D+	G001 (D+/2)	Ground /12 volts
6	RD/WH	12 V	F031/5 A	Terminal 15
7	–	–	–	–
8	–	–	–	–
9	–	–	–	–
10	–	–	–	–
11	–	–	–	–
12	RD	On-board voltage	F007/3 A	Terminal 30

9.8 Control of drive interlock N021

Overview: control of drive interlock N021

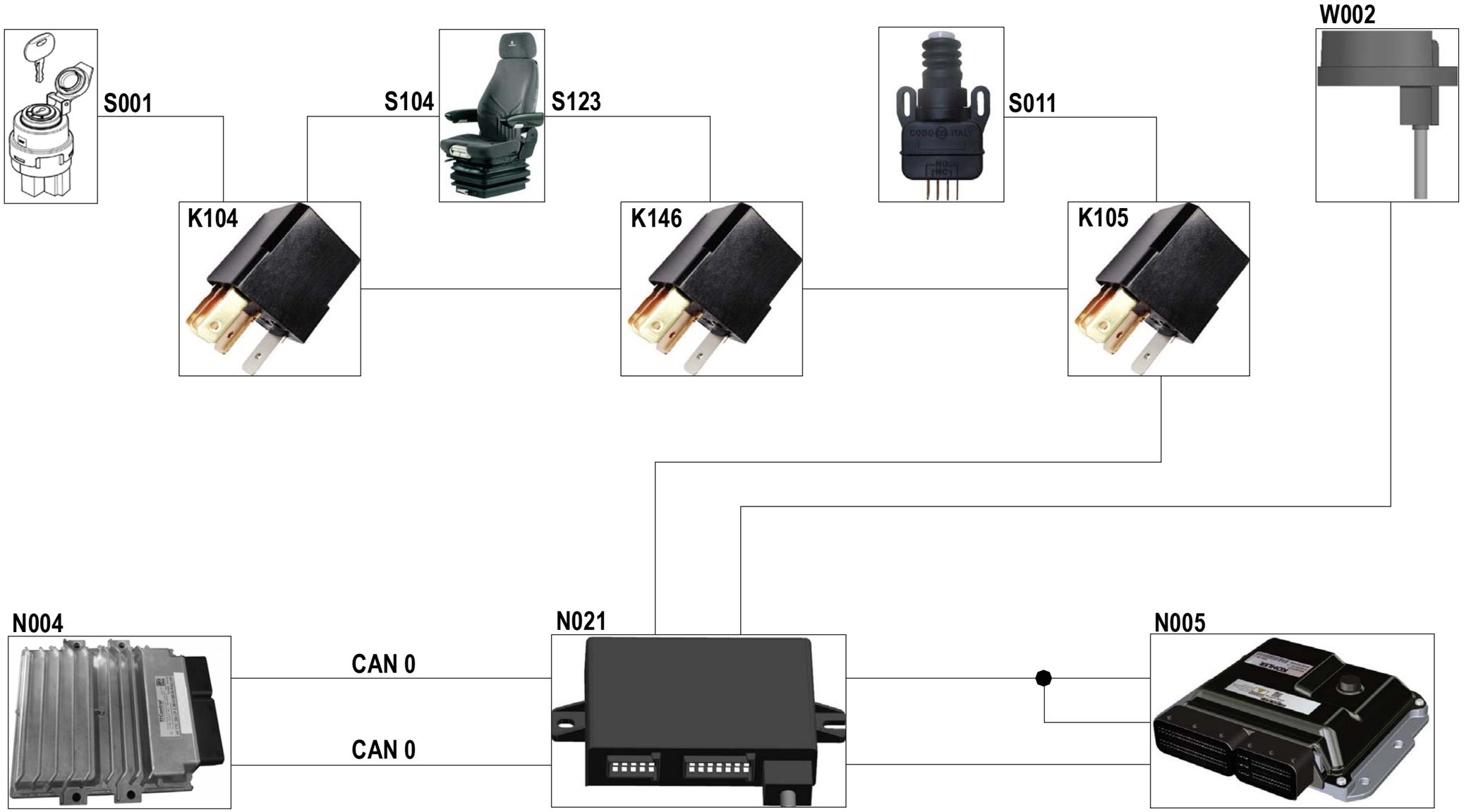

Element description of the drive interlock N021

Compo-nent	Component
K104	Switching relay for operator presence switch
K105	Parking brake switching relay
K146	Belt contact switch relay
N004	Operating hydraulics electronics
N005	Diesel engine electronics
N021	Immobiliser
S001	Preheating start switch
S011	Handbrake switch
S104	Operator presence switch
S123	Seat belt contact switch
W002	Drive interlock aerial

Pos.	Component	Designation
CAN0	CAN0 – Drive	–

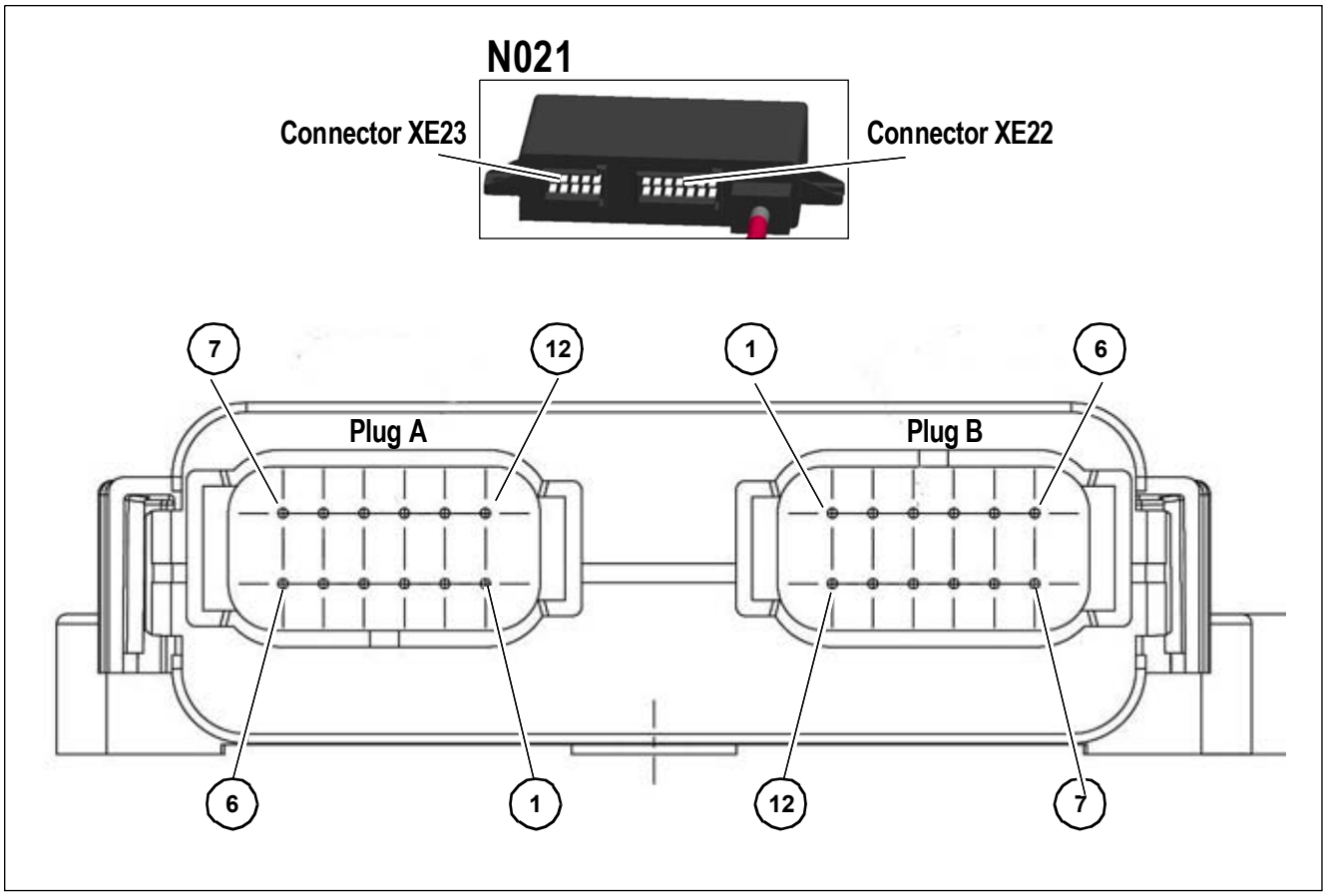

Pin assignment of the drive interlock N021

Plug A (grey)

PIN	Cable colour	Measurand	Component	Description
1	–	–	–	–
2	–	–	–	–
3	–	–	–	–
4	–	–	–	–
5	–	–	–	–
6	–	–	–	–
7	–	–	–	–
8	–	–	–	–
9	–	–	–	–
10	–	–	–	–
11	YE	Signal input	W002	Aerial
12	YE	Signal input	W002	Aerial

Plug B (black)

PIN	Cable colour	Measurand	Component	Description
1	PK	Input 12 V	S001 (50a) (8)	Preheating start switch
2	PK	Signal output	N005 (54)	Diesel engine electronics
3	RD/WH	On-board voltage	F031/5 A	Clamp 15
4	RD/WH	Signal output	N005 (47, 48)	Diesel engine electronics
5	–	–	–	–
6	–	–	–	–
7	RD	On-board voltage	F007/3 A	Clamp 30
8	RD/WH	On-board voltage	F024/3 A	Clamp 15
9	WH	CAN 0 High	N004 (222) N004 (248)	Frame electronics
10	BK	CAN 0 Low	N004 (209) N004 (235)	Frame electronics
11	BK	Ground	Cabin	–
12	–	–	–	–

9.9 Control of 14-pole front socket

Overview: control of 14-pole front socket

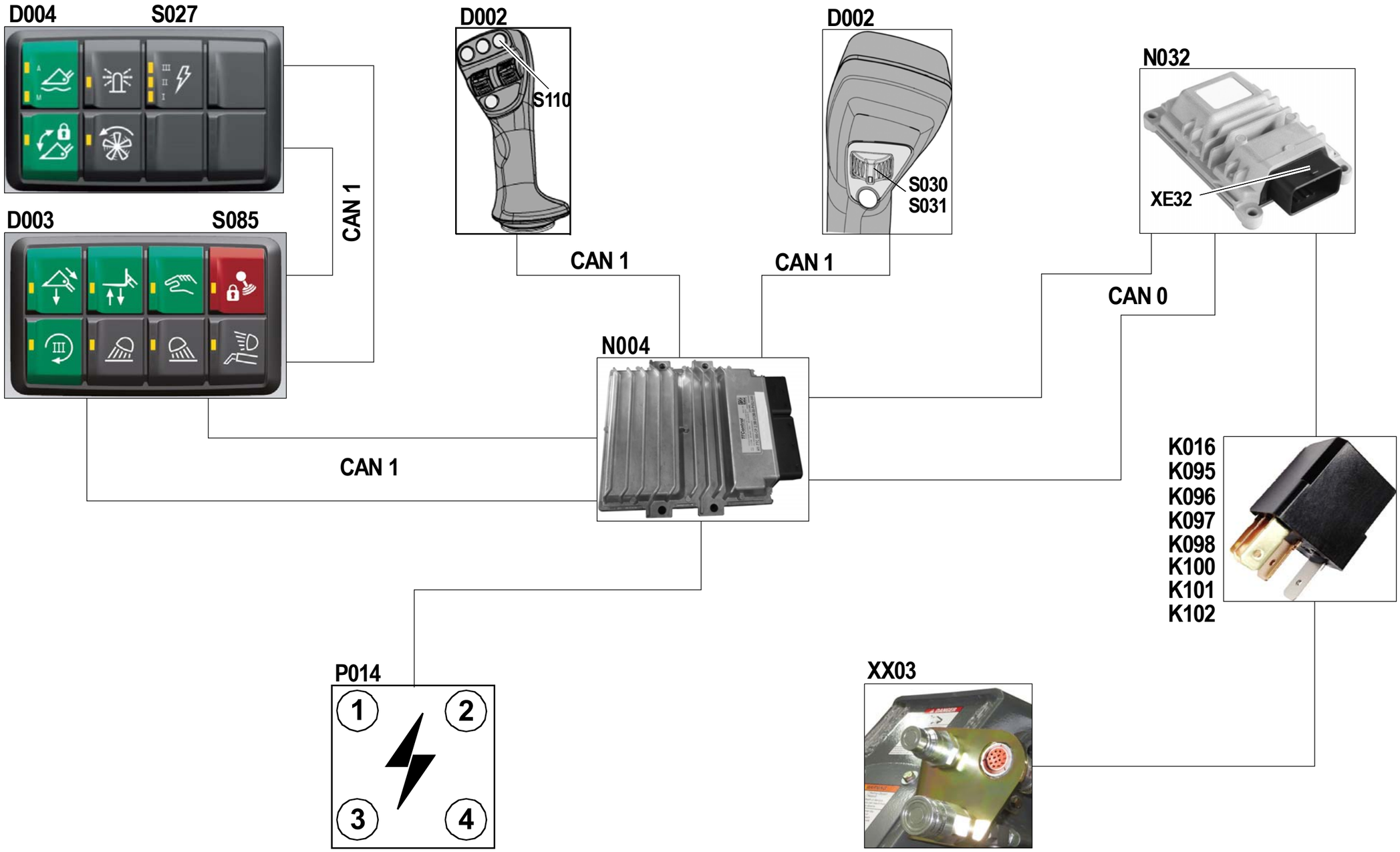

Description of inputs/outputs of 14-pole front socket XX03

Pos.	Component	Remarks
D004	Keypad	CAN 1
D005	Keypad	CAN 1
K016	Front power outlet switching relay	12 V
K095	Switching relay chute FF (G)	12 V
K096	Switching relay chute FF (H)	12 V
K097	Switching relay chute RIGHT (C)	12 V
K098	Switching relay chute LEFT (D)	12 V
K100	Switching relay chute DOWN (F)	12 V
K101	Switching relay chute UP (E)	12 V
K102	Push button step-by-step relay (J)	12 V
N004	Working hydraulics electronics / MVCU Main Vehicle Control Unit	Hydac
N032	Electronics 14-pole Front power outlet	Hydac
P014	Indicating instrument	Bauser
S027	Front socket/changeover switch	CAN 1
S030	“Unlock” push button	5 V
S031	“Lock” push button	5 V
S085	Button for long-haul travel lock	CAN 1
S110	Bucket repositioning/front socket push button	5 V
XE32	Electronics connector	48-pole
XX03	Front power outlet	14-pole

Pin assignment of electronics for front plug receptacle N032, plug XE32

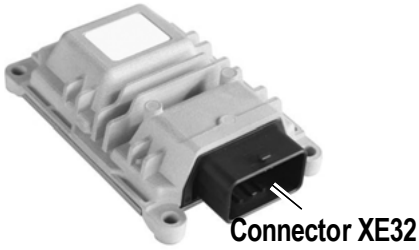

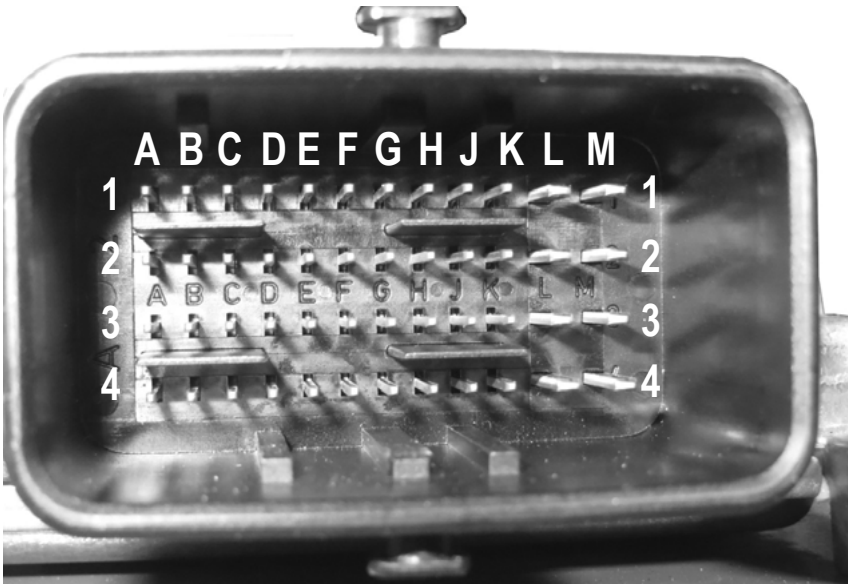

PIN	Cable colour	Description	To element (PIN)	Measurand
A1	BK-BN	Signal ground	K095 (85) K096 (85) K097 (85) K098 (85)	Ground
B1	BK-BN	Signal ground	K016 (85) K100 (85) K101 (85) K102 (85)	Ground
C1	YE	Signal output 2	K101 (86)	XX03 (E) 12 V
D1	YE	Signal output 3	K100 (86)	XX03 (F) 12 V
E1	YE	Signal output 4	K098 (86)	XX03 (D) 12 V
F1	YE	Signal output 5	K097 (86)	XX03 (C) 12 V
G1	YE	Signal output 6	K096 (86)	XX03 (H) 12 V
H1	YE	Signal output 7	K095 (86)	XX03 (G) 12 V
J1	YE	Signal output 0	K016 (86)	XX03 (K) (clamp 30 12 V)
K1	YE	Signal output 1	K102 (86)	XX03 (J) 12 V
L1	RD	Input on-board voltage	F059/30 A	Clamp 30 12 V
M1	RD	Input on-board voltage	Terminal 30	12 V

Plug assignment XE32

PIN	Cable colour	Description	To element (PIN)	Measurand
A2	–	–	–	–
B2	BK	CAN 0 (LOW)	–	CAN drive
C2	WH	CAN 0 (HIGH)	–	CAN drive
D2	–	–	–	–
E2	WH	–	–	–
F2	WH	–	–	–
G2	WH	–	–	–
H2	WH	–	–	–
J2	WH	–	–	–
K2	WH	–	–	–
L2	RD	Input on-board voltage	F059/30 A	Clamp 30 12 V
M2	RD	Input on-board voltage	F059/30 A	Clamp 30 12 V

Plug assignment XE32

PIN	Cable colour	Description	Component (PIN)	Measurand
A3	–	–	–	–
B3	GN	Input signal	K097 (87)	XX03 (C) 12 V
C3	GN	Input signal	K096 (87)	XX03 (H) 12 V
D3	GN	Input signal	K095 (87)	XX03 (G) 12 V
E3	RD	Input signal	K016 (87)	XX03 (K) 12 V
F3	–	–	–	–
G3	–	–	–	–
H3	–	–	–	–
J3	–	–	–	–
K3	–	–	–	–
L3	BK	Ground	–	XX03 (B) ground
M3	BK	Ground	–	XX03 (B) ground

Plug assignment XE32

PIN	Cable colour	Description	Component (PIN)	Measurand
A4	–	–	–	–
B4	GN	Input signal	K102 (87)	XX03 (J) 12 V
C4	GN	Input signal	K101 (87)	XX03 (E) 12 V
D4	GN	Input signal	K100 (87)	XX03 (F) 12 V
E4	GN	Input signal	K098 (87)	XX03 (D) 12 V
F4	–	–	–	–
G4	–	–	–	–
H4	–	–	–	–
J4	–	–	–	–
K4	RD/WH	Power supply	F059/30 A	12 V
L3	BK	Ground	–	XX03 (B) ground
M3	BK	Ground	–	XX03 (B) ground

Touch button S027 – front socket/switch-over in the keypad D004

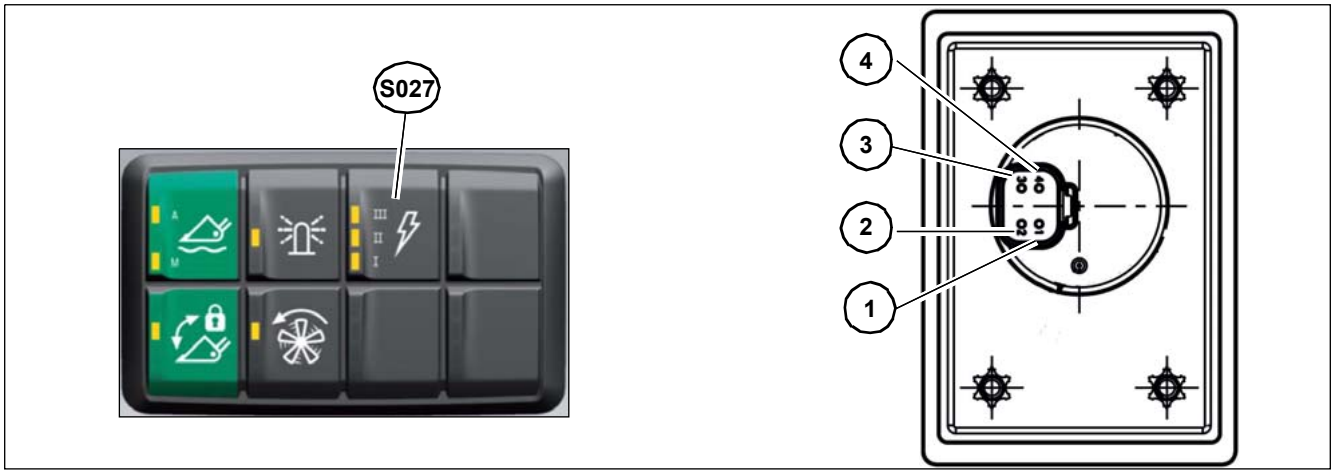

Pin assignment of keypad D004

PIN	Component	Measuring range
1	Voltage supply F032/5 A	12 V
2	Ground	Cabin
3	CAN 1	high
4	CAN 1	low

Function description

With the front socket keypad touch button **S027** three electric circuits can be switched on in succession.

The front socket XX03 is only active when the diesel engine is running and the lock for long-haul travel touch button**S085** is switched off.

1. With the help of the touch button **S030**/**S031** an attachment can be moved left/right or forward/backward depending on the circuit selected.
2. It is not possible to switch on two or more circuits at the same time.
3. By pressing the front socket touch button **S027** circuit I becomes active.
4. With every further actuation of the front socket touch button **S027**, the circuit is changed (scrolling continuously from I to III) and the corresponding LED lights up.
5. If circuit III is active, a renewed actuation of the front socket touch button **S027** switches the circuit off.

Behaviour when a diesel engine is restarted.

If the machine is restarted, all electric circuits of the front socket **XX02** are deactivated and must be reactivated.

Lock for long-haul travel touch button S044 in the keypad D003

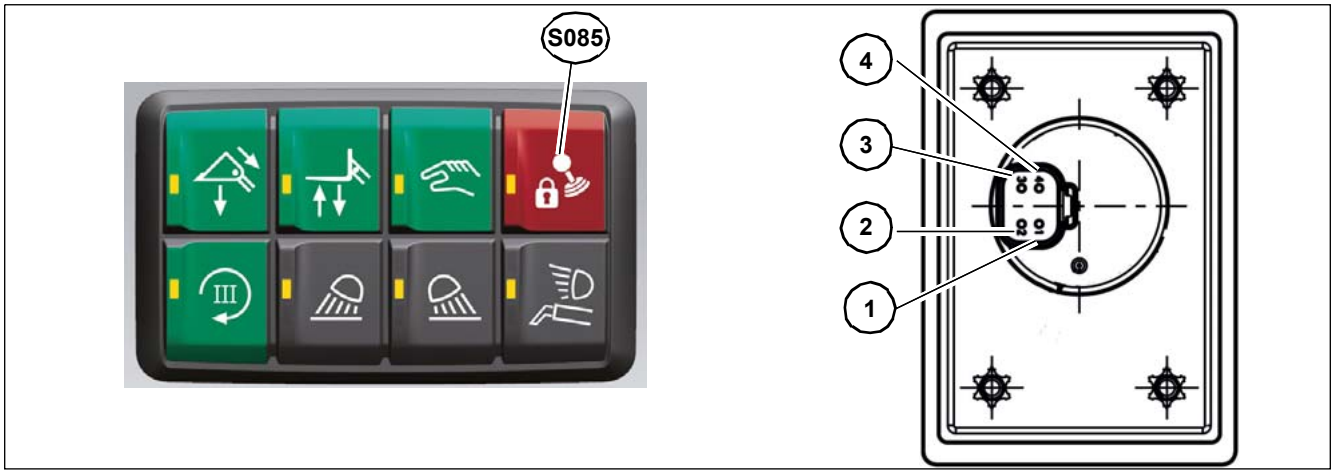

Pin assignment of keypad D003

PIN	Component	Measuring range
1	Voltage supply F032/5 A	12 V
2	Ground	Cabin
3	CAN 1	high
4	CAN 1	low

Function description

When the road travel lock function switch **S085** is switched to road travel lock ON, no hydraulic functions can be actuated. If the function is active, the lock for long-haul travel touch button**S085** lights up.

Joystick shut-down switched on

With the lock for long-haul travel touch button **S085** on the keypad **D003** a CAN message (CAN1) is sent to controller **N004**. The controller **N004** deactivates all outputs to the proportional valves on the control unit.

Joystick D002

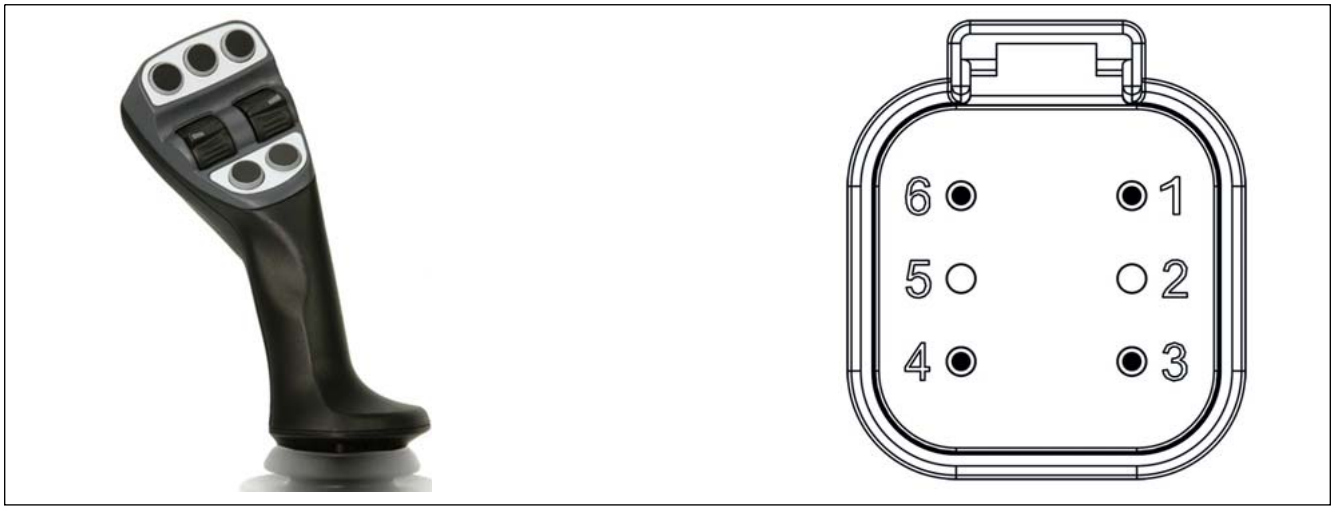

Pin assignment of Joystick D002

PIN	Connection	Measuring range
1	Ground (KL31)	Ground/cab
2	Voltage supply F010/3 A (KL30)	12 V
3	Switched voltage supply F032/5 A (KL15)	12 V
4	–	–
5	CAN 1	low
6	CAN 1	high

Description of joystick D002 (version 1)

Functional characteristics of joystick (handle)

The joystick is used to operate the loader unit as well as various additional functions.

The loader unit can only be completely operated by the control lever if:

1. the seat contact switch is actuated (operator in the seat)
2. Starter ON
3. the diesel engine is on
4. Lock for long-haul travel **S085** off

Front side of joystick D002

Pos.	Component	Function
A	Tip switch **S066**	The drive is deactivated (neutral)
B	Roller **S034/035**	Forward/reverse travel
C	Tip switch **S135**	Reduce speed level e.g. from rabbit to turtle
D	Tip switch **S136**	Increase speed level e.g. from turtle to rabbit
E	Tip switch **S110**	Reversing valve (front telescopic arm)
F	Roller **S038/039**	Extend/retract telescopic arm
G	Tip switch **S092**	Bucket repositioning

Reverse of joystick D002

Pos.	Component	Function
H	Roller **S030/031**	Unlock/lock third control circuit
I	Tip switch **S025**	Differential lock (**Y009**)

Description of joystick D002 (version 2)

Functional characteristics of joystick (handle)

The joystick is used to operate the loader unit as well as various additional functions.

The loader unit can only be completely operated by the control lever if:

1. the seat contact switch is actuated (operator in the seat)
2. Starter ON
3. the diesel engine is on
4. Lock for long-haul travel **S085** off

Front side of joystick D002

Pos.	Component	Function
A	Tip switch **S109**	Operation of electric circuit 1 of the 7-pole Front power outlet
B	Roller **S034/035**	Forward/reverse drive and neutral
C	Tip switch **S135**	Reduce speed level e.g. from rabbit to turtle
D	Tip switch **S136**	Increase speed level e.g. from turtle to rabbit
E	Tip switch **S110**	Reversing valve (front telescopic arm)
F	Roller **S038/039**	Extend/retract telescopic arm
G	Tip switch **S092**	Bucket repositioning

Reverse of joystick D002

Pos.	Component	Function
H	Roller **S030/031**	Unlock/lock third control circuit
I	Tip switch **S025**	Differential lock (**Y009**)

Relay assignment of front plug receptacle 14-pole

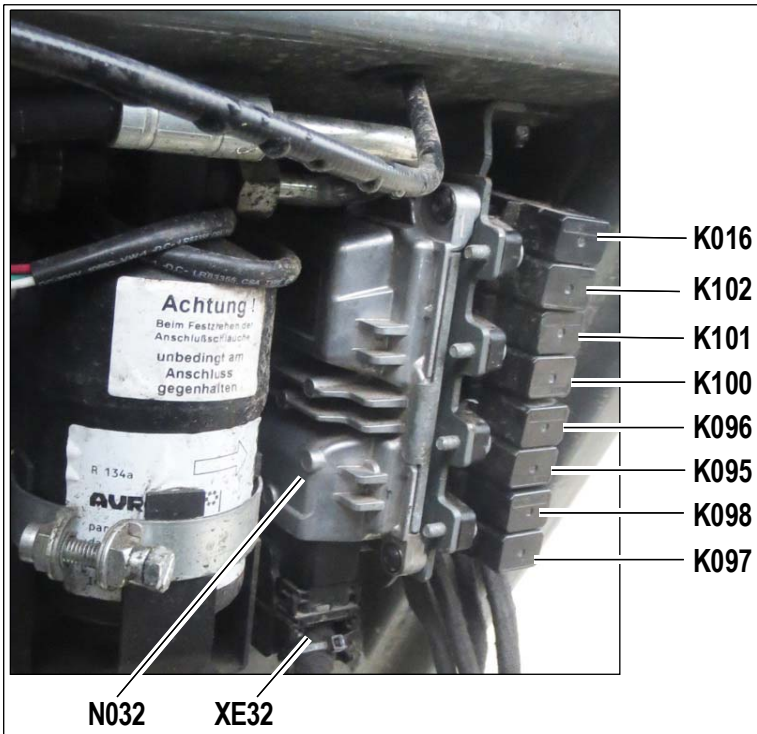

Control for the front plug receptacle

KCN	Component	Switched PIN Front plug receptacle, 14-pole	Remarks
K097	Switching relay chute right	XX03 (C)	12 V
K098	Switching relay chute left	XX03 (D)	12 V
K095	Switching relay chute FF	XX03 (G)	12 V
K096	Switching relay chute FF	XX03 (H)	12 V
K100	Switching relay chute down	XX03 (F)	12 V
K101	Switching relay chute up	XX03 (E)	12 V
K102	Switching relay touch button (joystick S110)	XX03 (J)	12 V
K016	Front power outlet switching relay	–	Power supply
XE32	Front power outlet	–	14-pole
N032	Front plug receptacle electronics KN032	–	–

14-pole front plug receptacle pin assignment

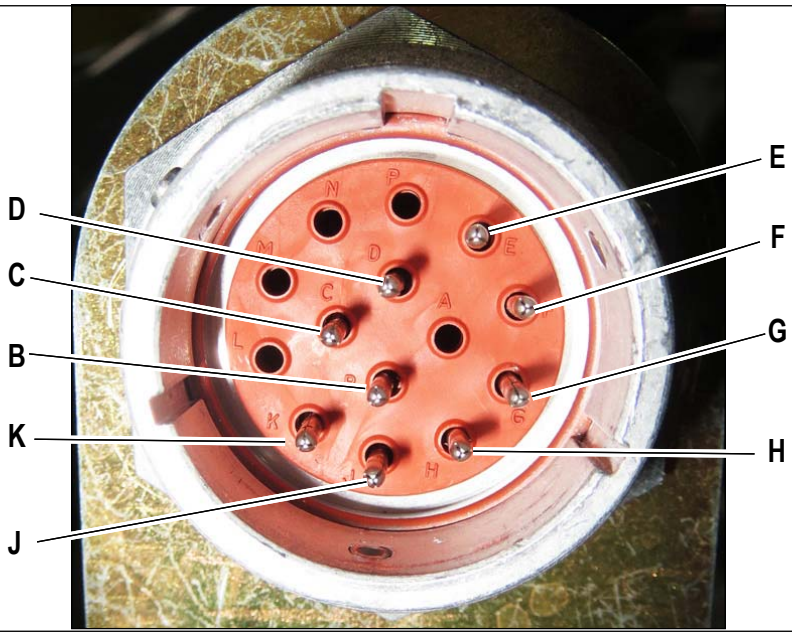

KCN	Component	PIN	Remarks
XX03	Chute right	(C)	12 V
XX03	Chute left	(D)	12 V
XX03	Chute FF	(G)	12 V
XX03	Chute FF	(H)	12 V
XX03	Chute down	(F)	12 V
XX03	Chute up	(E)	12 V
XX03	Touch button (Joystick S110)	(J)	12 V
XX03	Front power outlet	(K)	Electric power supply via K016 (87)
XX03	Front power outlet	(B)	Ground

Operation of the front plug receptacle touch button S110

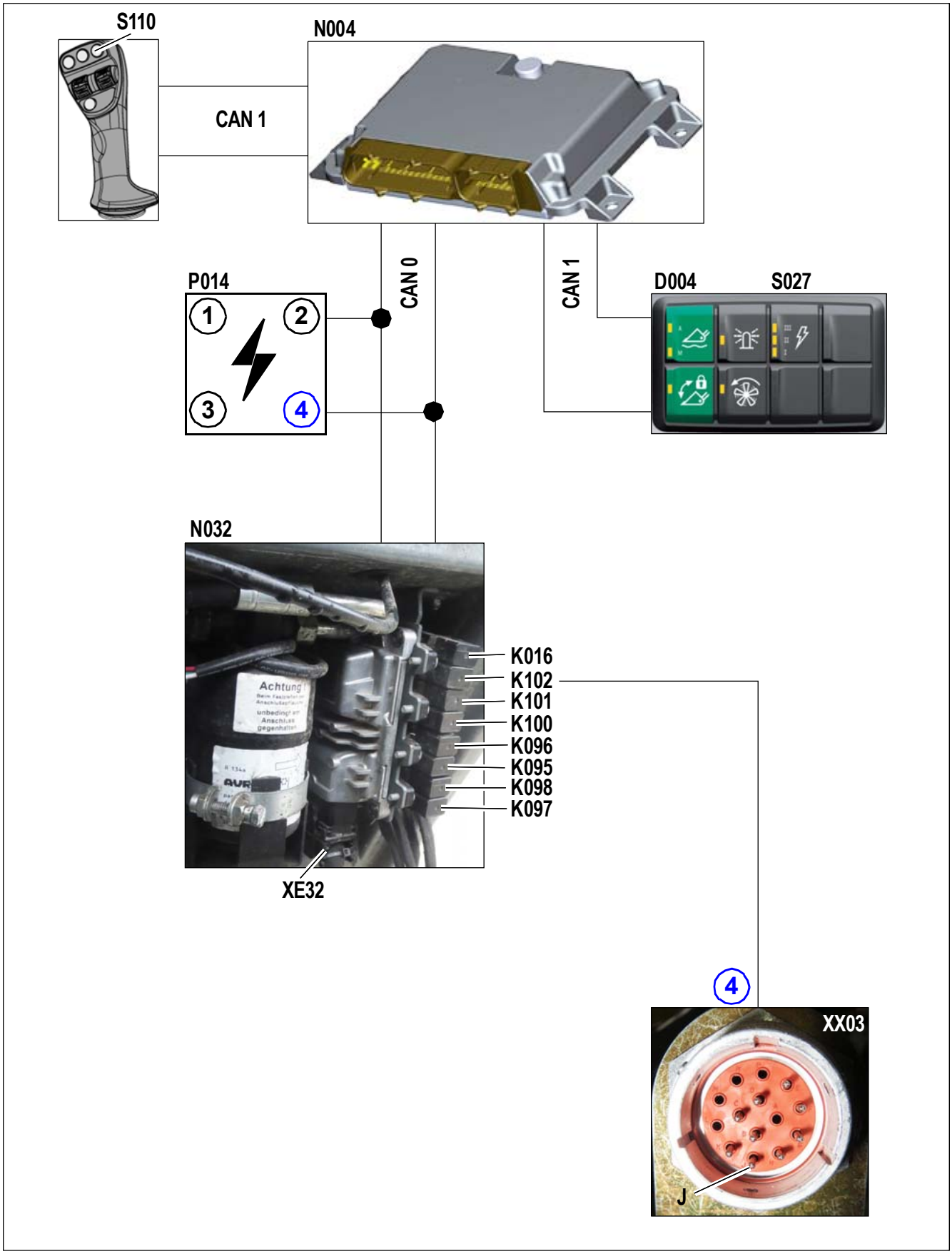

Functional characteristics of the front plug receptacle touch button S110

To apply voltage to the front socket **XX03** at Pin **J** the lock for long-haul travel touch button **S085** must be deactivated. The diesel engine must be running and the operator must be in the seat. With the touch button **S110**, the Pin **J** on the front socket **XX03** is switched on and Symbol 4 in the display instrument **P014** is displayed. If the touch button **S110** is pushed again, PIN **J** on the front socket **XX03** is switched off.

Via touch button **S110** a CAN is transmitted to electronics control unit **N004** and a CAN message is sent to the electronics **N032** front socket. The relay **102** is energized on (86) and the PIN **J** is supplied with a voltage of 12 V on the front socket **XX03**.

If touch button **S110** is pressed again, via a CAN message to the electronics control unit **N032**, the PIN **J** on the front socket **XX03** is deactivated.

Front plug receptacle circuit breaker S030 (to the right)

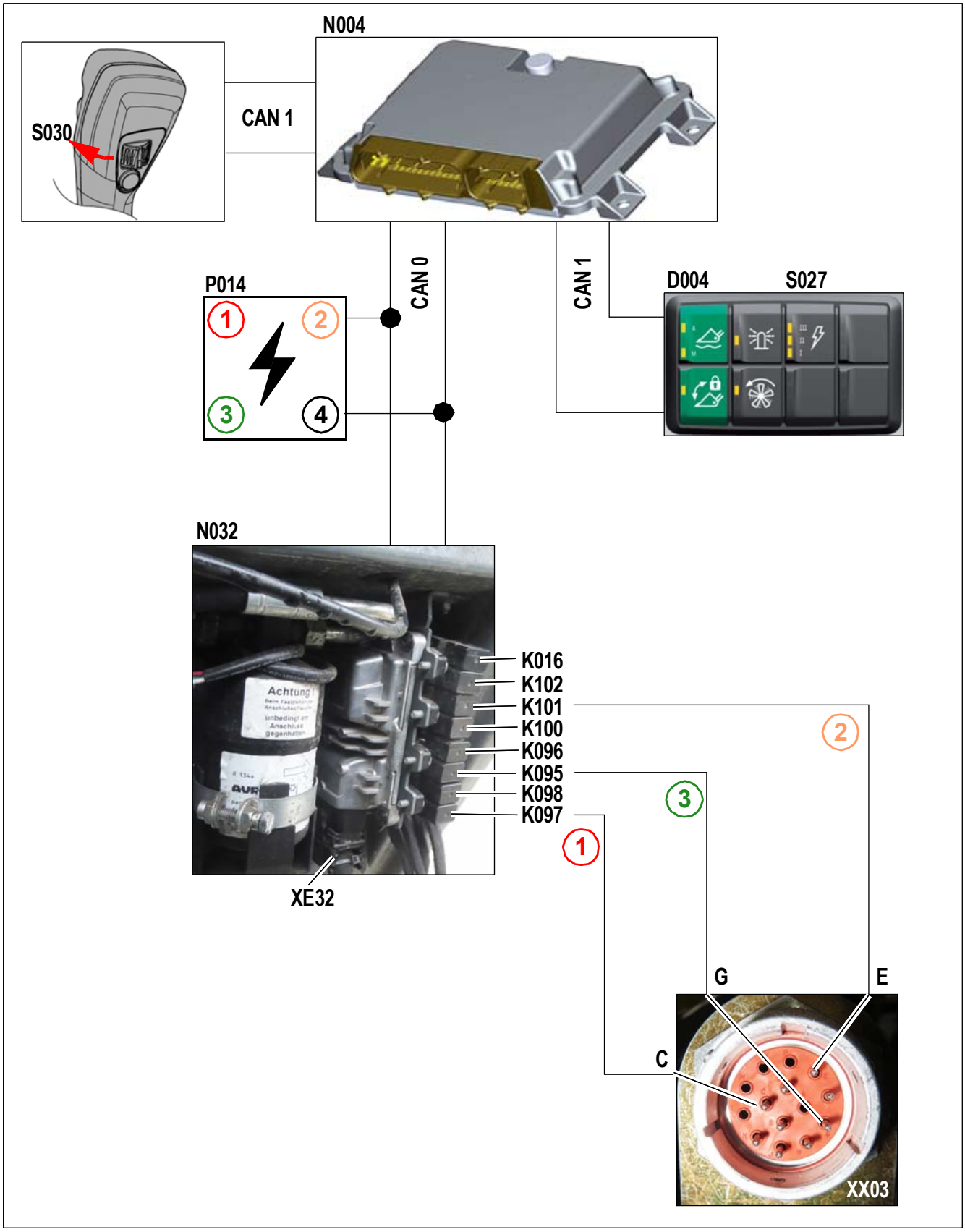

Functional characteristics of circuit breaker S030

With switch **S027**, three different circuits can be selected.

Circuit 1

- With the switch/touch button**S027** in position **I** circuit 1 (display in display) can be selected.

1. If the switch **S030** is pressed to the right, a CAN message is sent to the work hydraulics electronics **N004**.
2. Via a CAN message, this is sent to the display **P014** and the front plug receptacle electronics **N032**.
3. The front plug receptacle electronics **N032** controls the relay **K097** PIN (86. Thus the PIN **C** of the front plug receptacle **XX03** is powered with 12 volts.

Circuit 2

- With the switch / touch button **S027** in position **II,** select the circuit 2 (shown in display).

1. If the switch **S030** is pressed to the right, a CAN message is sent to the work hydraulics electronics **N004**.
2. Via a CAN message, this is sent to the display **P014** and the front plug receptacle electronics **N032**.
3. The front plug receptacle electronics **N032** controls the relay **K101** PIN (86. Thus the PIN **E** of the front plug receptacle **XX03** is powered with 12 volts.

Circuit 3

- With the switch/touch button**S027** in position **III** circuit 3 (display in display) can be selected.

1. If the switch **S030** is pressed to the right, a CAN message is sent to the work hydraulics electronics **N004**.
2. Via a CAN message, this is sent to the display **P014** and the front plug receptacle electronics **N032**.
3. The front plug receptacle electronics N032 controls the relay K095 PIN (86). Thus the PIN G of the front plug receptacle XX03 is powered with 12 volts.

Front plug receptacle circuit breaker S031 (to the left)

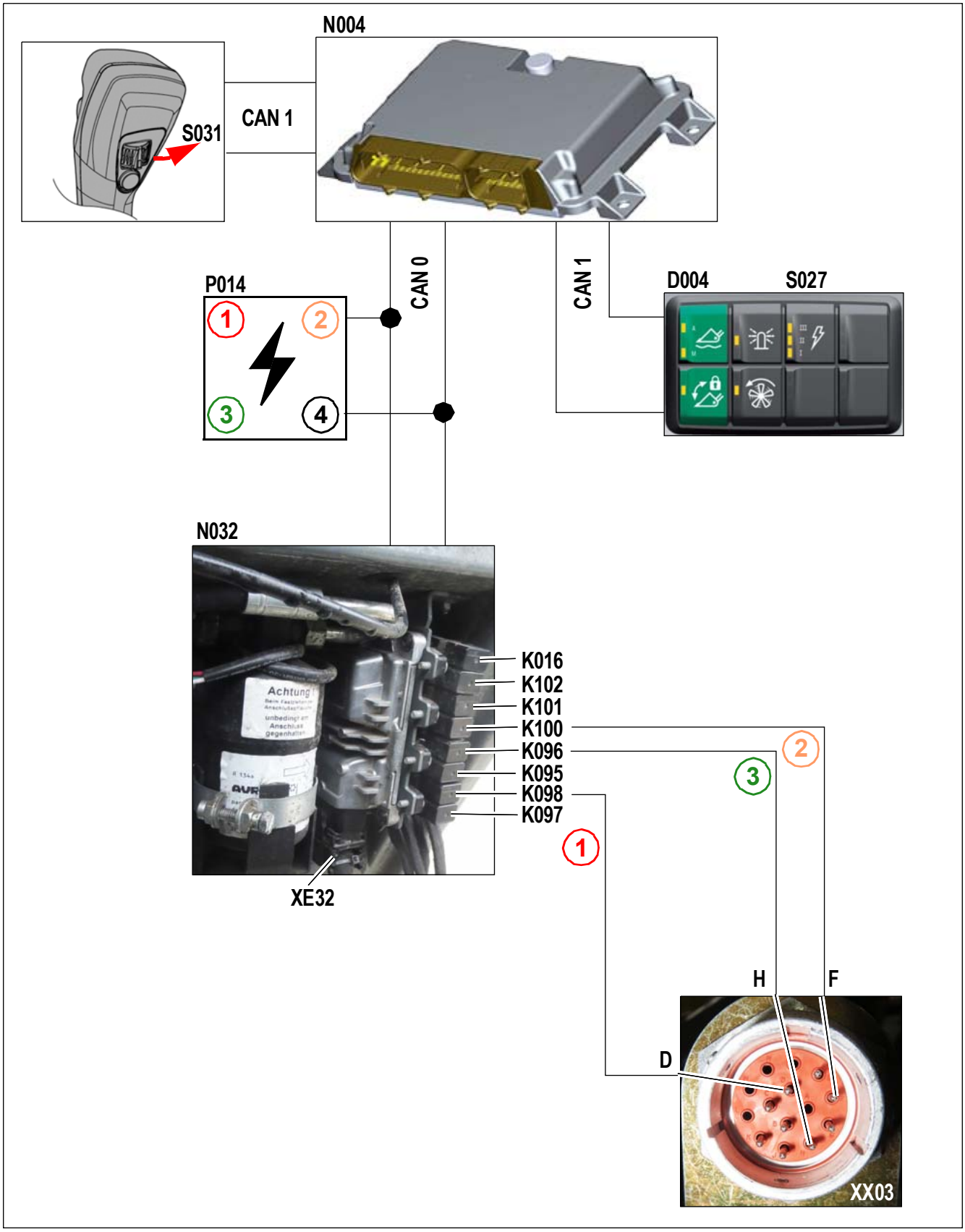

Functional characteristics of circuit breaker S031

With the circuit breaker **S027,** three different circuits can be selected in the position **II** .

Circuit 1

- With the switch/touch button**S027** in position **I** circuit 1 (display in display) can be selected.

1. If the switch **S031** is pressed to the left, a CAN message is sent to the work hydraulics electronics **N004**.
2. Via a CAN message, this is sent to the display **P014** and the front plug receptacle electronics**N032** .
3. The front plug receptacle electronics**N032** controls the relay **K 098** PIN (86). Thus the PIN **D** of the front plug receptacle**XX03** is powered with 12 volts.

Circuit 2

- With the switch / touch button **S027** in position **II,** select the circuit 2 (shown in display).

1. If the switch **S031** is pressed to the left, a CAN message is sent to the work hydraulics electronics **N004**.
2. Via a CAN message, this is sent to the display **P014** and the front plug receptacle electronics **N032**.
3. The front plug receptacle electronics **N032** controls the relay **K100** PIN (86. Thus the PIN **F** of the front plug receptacle **XX03** is powered with 12 volts.

Circuit 3

- With the switch/touch button**S027** in position **III** circuit 3 (display in display) can be selected.

1. If the switch **S031** is pressed to the left, a CAN message is sent to the work hydraulics electronics **N004**.
2. Via a CAN message, this is sent to the display **P014** and the front plug receptacle electronics**N032**.
3. The front plug receptacle electronics**N032** controls the relay **K 096** PIN (86). Thus the PIN **H** of the front plug receptacle**XX03** is powered with 12 volts.

9.10 Control of 7-pole front socket

Overview: control of 7-pole front socket

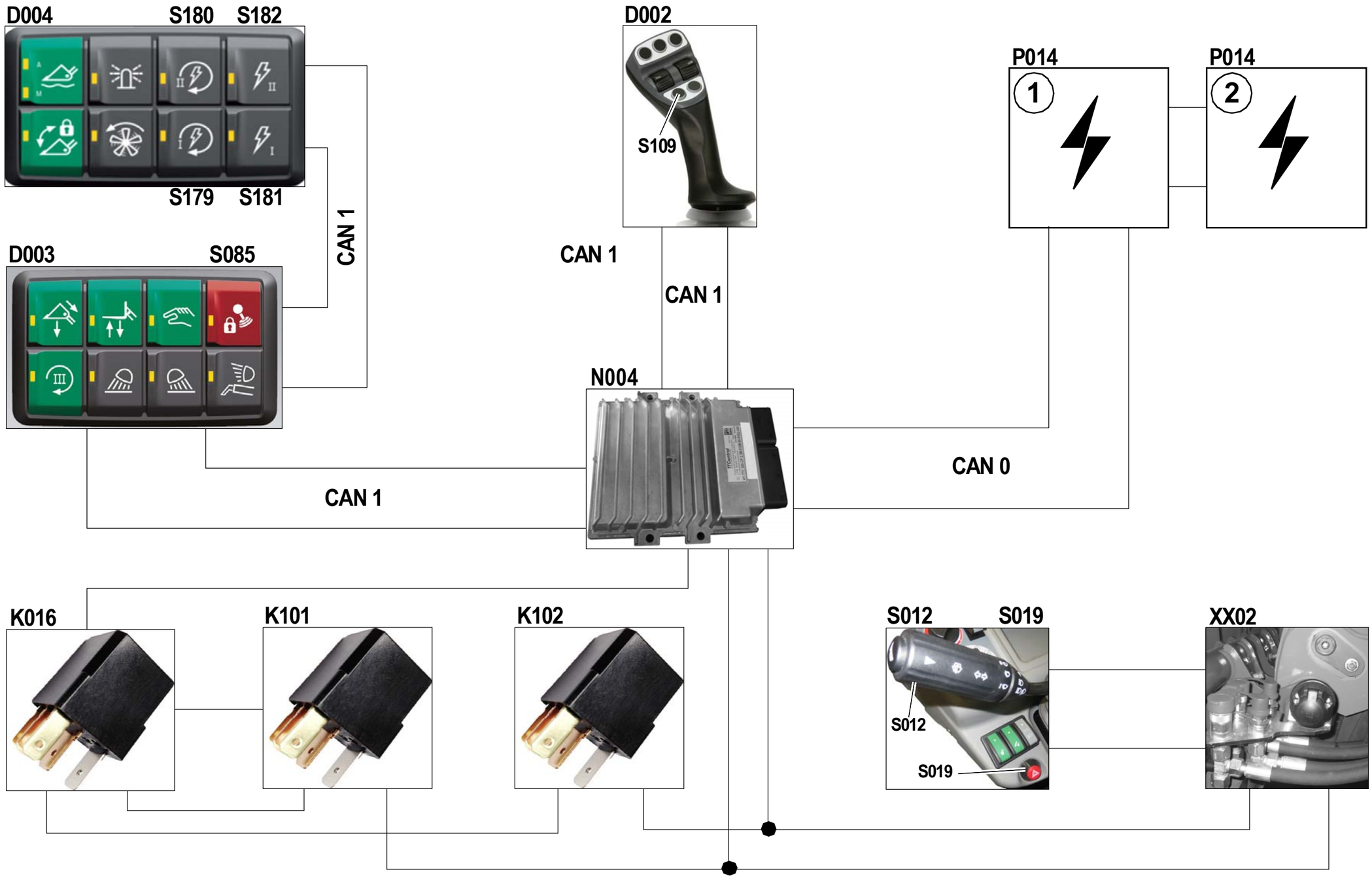

Description of 7-pole front socket XX02

Pos.	Component	Remarks
CAN 0	Machine travel	–
CAN 1	Work hydraulics	–
D002	Control lever electronics	CAN 1
D003	CAN keypad	CAN 1
D004	CAN keypad	CAN 1
K016	Front power outlet switching relay	12 V
K101	Switching relay of front socket (S179 and S181)	12 V
K102	Switching relay of front socket (S180 and S182)	12 V
N004	Working hydraulics electronics / MVCU Main Vehicle Control Unit	Hydac
P014	Indicating instrument (display) for additional machine information	Bauser
S012	Steering-column control lever (left)	12 V
S019	Hazard lights switch	12 V
S085	Switch for joystick cut-off during road travel (lock for long-haul travel)	CAN 1
S109	Touch button for control lever for electric connection 1 (Joystick Version 2)	CAN 1
S179	Front socket, signal 1 (continuous)	CAN 1
S180	Front socket, signal 2 (continuous)	CAN 1
S181	Front socket, signal 1 (jog mode)	CAN 1
S182	Front power outlet Signal 2 inching mode	CAN 1
XX02	Front power outlet	7-pole

Pin assignment on the front plug receptacle XX02

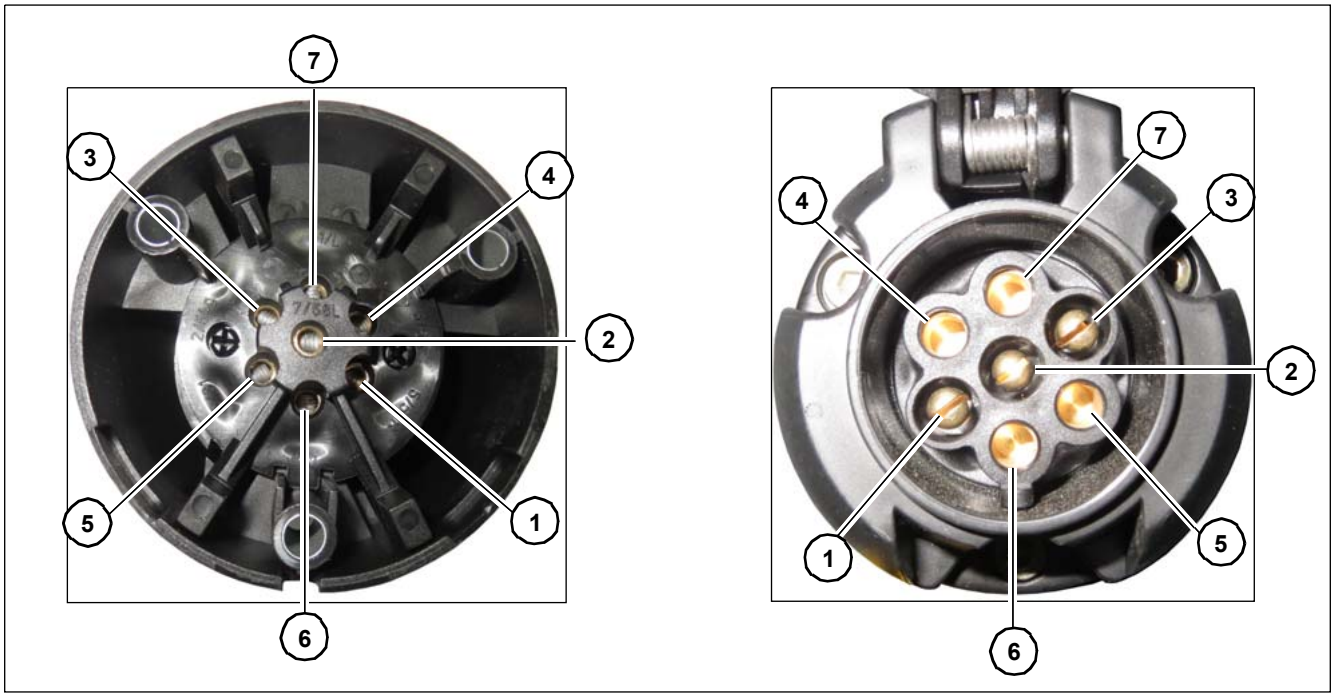

Pos.	Cable colour	Connection XX02	Remarks
1	GY	58R/5	12 V supply F17/10A
2	GY	58L/7	12 V supply F17/10A
3	GY	54G/2	12 V output Signal 1 (S179 and S181)
4	GY	54/6	12 V output Signal 2 (S180 and S182)
5	BK	31/3	Ground
6	GY	R/4	Right blinker from S012 (R) and S019 (R)
7	GY	L/1	Left blinker from S012 (L) and S019 (L)

Function description

In order to be able to commission front socket **XX02**, the ignition must be switched on, and the lock for long-haul travel switch **S085** must be deactivated.

Activating the lock for long-haul travel switch **S085** deactivates all circuits of the 7-pole plug receptacle and prohibits operation through the keypad **D004** and the electrical connection touch button 1 **S109** on the joystick **D002** (version 2).

The front socket switching relays **K101** and **K102** are read back to the work hydraulics electronics **N004** by the control on Pin 124 and Pin 132. In the case of faulty signals, the front socket **XX02** will be deactivated.

Behaviour when a diesel engine is restarted.

If the machine is restarted, all electric circuits of the front socket **XX02** are deactivated and must be reactivated.

The front socket XX02 has two electric circuits 1 and 2, which are manually connectible by means of relay.

- Push button operation for electric circuit 1 via the switch **S181**
- Continuous operation for electric circuit 1 via the switch **S179**
- Push button operation for electric circuit 2 via the switch **S182**
- Continuous operation for electric circuit 2 via the switch **S180**

For safety reasons, push button operation has priority over continuous operation.

If the push button operation is actuated while continuous operation is active, the continuous operation is deactivated, and push button operation becomes active.

Continuous operation can only be activated when the push button operation is switched off.

Operation via joystick D002 (Version 2) touch button S109

If the joystick **D002** (Version 2) installed, electric circuit I can be actuated by pressing the touch button electric connection 1 **S109**. Operation via the touch button electric connection 1 **S109** on the joystick **D002** (Version 2) has priority over the switch continuous operation electric circuit I **S181**. In other words, if the switch circuit breaker electric circuit **S181** is active (LED on) and the touch button electric connection 1**S109** on the joystick D002 (Version 2) is pressed at the same time, the LED goes out, and the continuous operation of electric circuit I remains active for only as long as the touch button electric connection 1**S109** is pushed (push button operation).

Lock for long-haul travel touch button S044 in the keypad D003

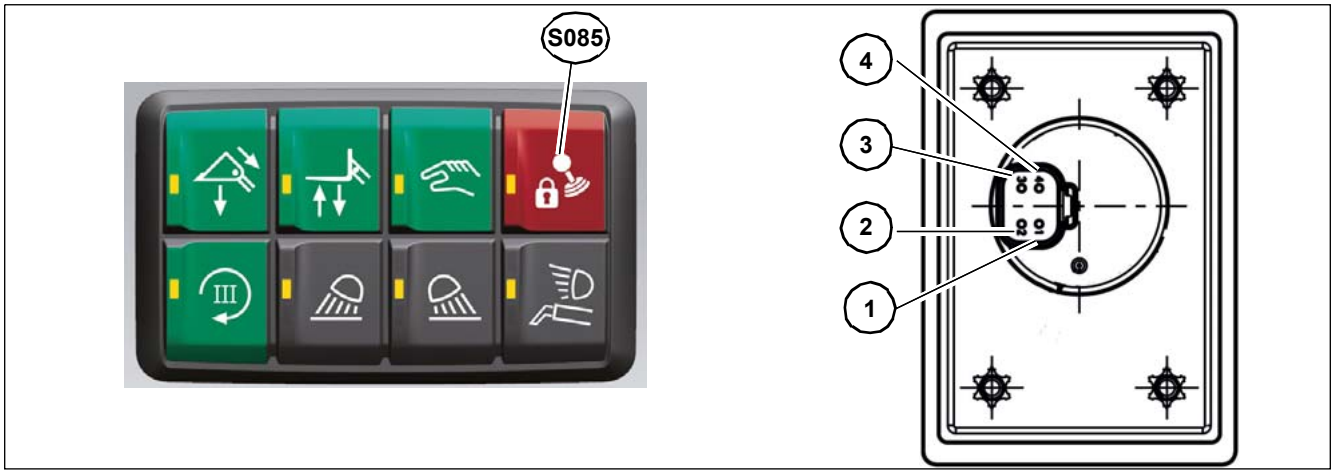

Pin assignment of keypad D003

PIN	Component	Measuring range
1	Voltage supply F032/5 A	12 V
2	Ground	Cabin
3	CAN 1	high
4	CAN 1	low

Function description

When the road travel lock function switch **S085** is switched to road travel lock ON, no hydraulic functions can be actuated. If the function is active, the lock for long-haul travel touch button**S085** lights up.

Joystick shut-down switched on

With the lock for long-haul travel touch button **S085** on the keypad **D003** a CAN message (CAN1) is sent to controller **N004**. The controller **N004** deactivates all outputs to the proportional valves on the control unit.

Front socket touch button S179, S180, S181, S182 in the keypad D004

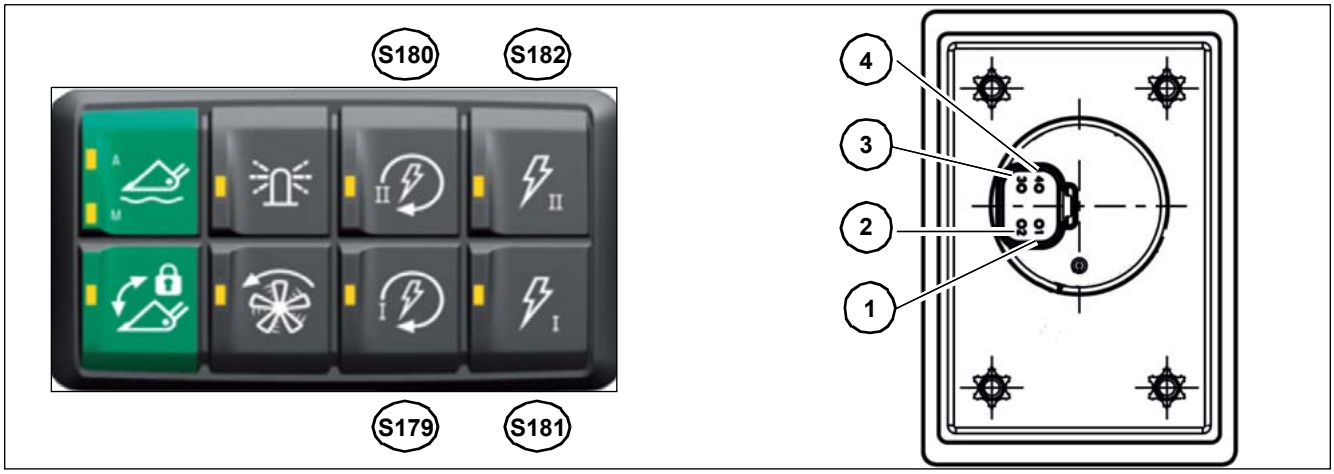

Pin assignment of keypad D003

PIN	Component	Measuring range
1	Voltage supply F032/5 A	12 V
2	Ground	Cabin
3	CAN 1	high
4	CAN 1	low

Function description

- Push button operation for electric circuit 1 via the switch **S181**
- Continuous operation for electric circuit 1 via the switch **S179**
- Push button operation for electric circuit 2 via the switch **S182**
- Continuous operation for electric circuit 2 via the switch **S180**

For safety reasons, push button operation has priority over continuous operation.

If the push button operation is actuated while continuous operation is active, the continuous operation is deactivated, and push button operation becomes active.

Continuous operation can only be activated when the push button operation is switched off.

Joystick D002

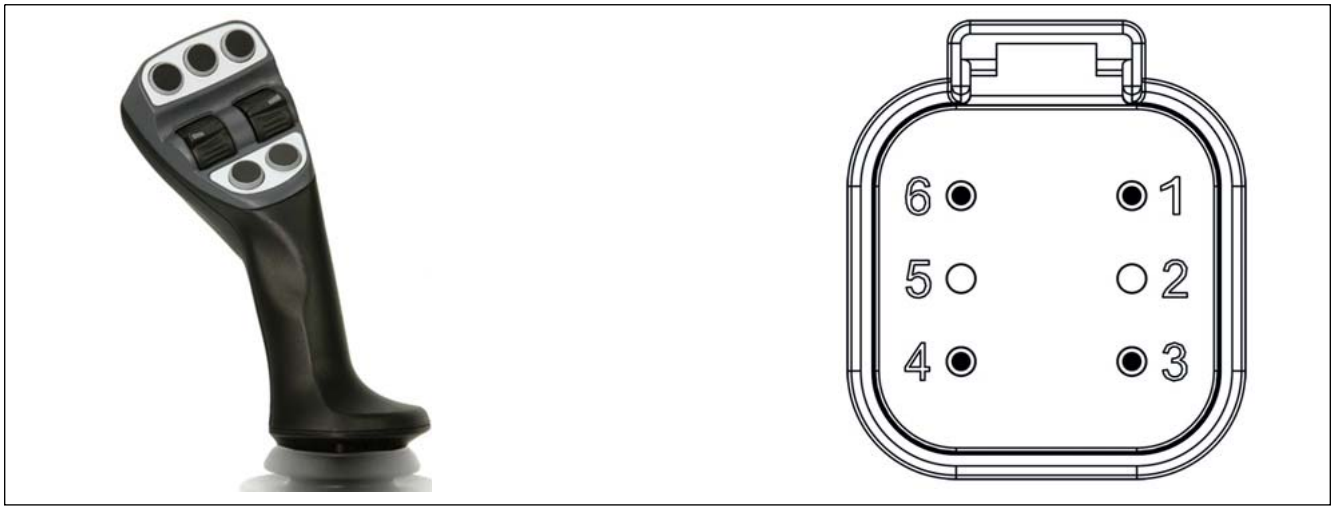

Pin assignment of Joystick D002

PIN	Connection	Measuring range
1	Ground (KL31)	Ground/cab
2	Voltage supply F010/3 A (KL30)	12 V
3	Switched voltage supply F032/5 A (KL15)	12 V
4	–	–
5	CAN 1	low
6	CAN 1	high

Description of joystick D002 (version 1)

Functional characteristics of joystick (handle)

The joystick is used to operate the loader unit as well as various additional functions.

The loader unit can only be completely operated by the control lever if:

1. the seat contact switch is actuated (operator in the seat)
2. Starter ON
3. the diesel engine is on
4. Lock for long-haul travel**S085** off

Front side of joystick D002

Pos.	Component	Function
A	Tip switch **S066**	The drive is deactivated (neutral)
B	Roller **S034/035**	Forward/reverse travel
C	Tip switch **S135**	Reduce speed level e.g. from rabbit to turtle
D	Tip switch **S136**	Increase speed level e.g. from turtle to rabbit
E	Tip switch **S110**	Reversing valve (front telescopic arm)
F	Roller **S038/039**	Extend/retract telescopic arm
G	Tip switch **S092**	Bucket repositioning

Reverse of joystick D002

Pos.	Component	Function
H	Roller **S030/031**	Unlock/lock third control circuit
I	Tip switch **S025**	Differential lock (**Y009**)

Description of joystick D002 (version 2)

Functional characteristics of joystick (handle)

The joystick is used to operate the loader unit as well as various additional functions.

The loader unit can only be completely operated by the control lever if:

1. the seat contact switch is actuated (operator in the seat)
2. Starter ON
3. the diesel engine is on
4. Lock for long-haul travel **S085** off

Front side of joystick D002

Pos.	Component	Function
A	Tip switch **S109**	Operation of electric circuit 1 of the 7-pole Front power outlet
B	Roller **S034/035**	Forward/reverse drive and neutral
C	Tip switch **S135**	Reduce speed level e.g. from rabbit to turtle
D	Tip switch **S136**	Increase speed level e.g. from turtle to rabbit
E	Tip switch **S110**	Reversing valve (front telescopic arm)
F	Roller **S038/039**	Extend/retract telescopic arm
G	Tip switch **S092**	Bucket repositioning

Reverse of joystick D002

Pos.	Component	Function
H	Roller **S030/031**	Unlock/lock third control circuit
I	Tip switch **S025**	Differential lock (**Y009**)

Steering-column control lever S012

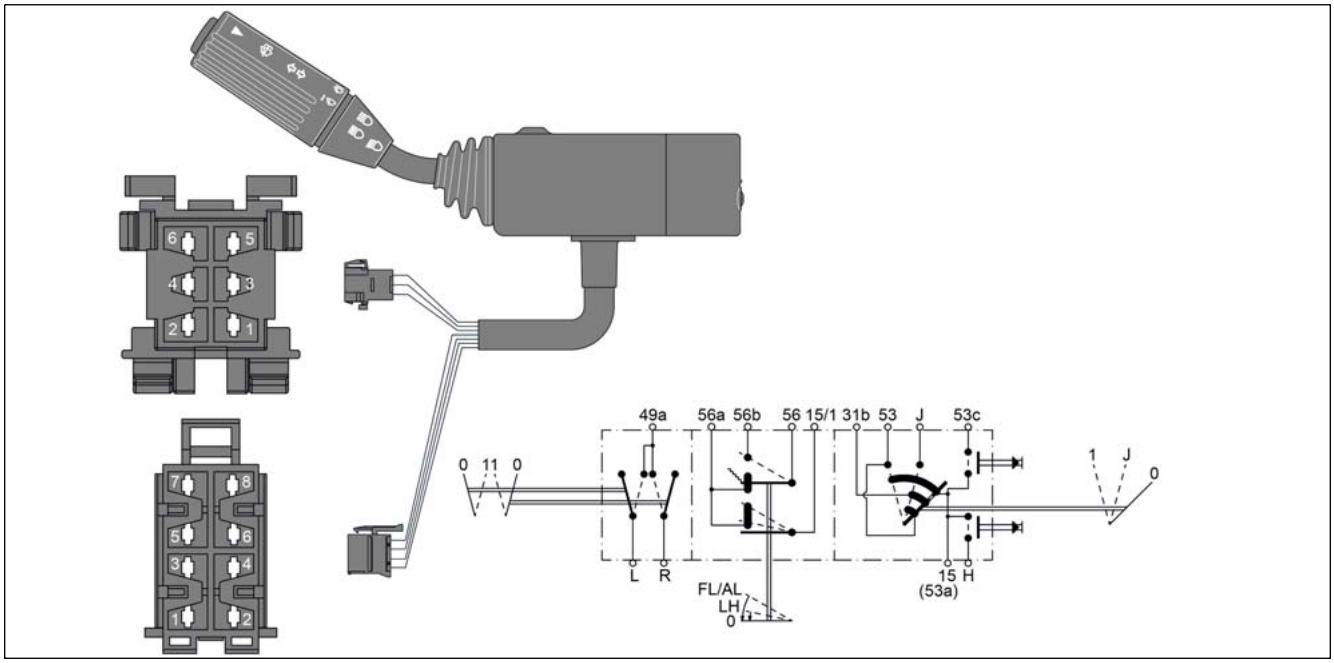

Pin assignment of plug XL00

PIN	Connection S012	Component	Measuring range
1	L	Output to left headlight H076 (5) Output to left tail light H078 (1) Output to rear socket XX01 (1) Output to front socket XX02 (L1)	12 V
2	R	Output to right headlight H077 (5) Output to right tail light H079 (1) Output to rear socket XX01 (4) Output to front socket XX02 (6)	12 V
3	49a	Input from warning light switch S019 (49a)	12 V
4	15/1	Input F016/20A	12 V
5	56b	Input F021/7,5A	12 V
6	56a	Output display instrument P014 (22)	12 V

Pin assignment of plug XL01

PIN	Connection S012	Component	Measuring range
1	15 (53a)	Input F026/20A	12 V
2	–	–	–
3	53	Output wiper level N004 K023 (186)	12 V
4	31b	Output to interval relay K025 (53M)	12 V
5	H	Output to signal horn B002 (1)	12 V
6	53c	Output to Wipe/wash pump, front M005 (+) Wiper/washer S020 (4) Interval relay K025 (T)	12 V
7	J	Output to interval relay K025 (I)	12 V
8	56	Input from seat contact switch S104 (3)	12 V

Warning light switch S019

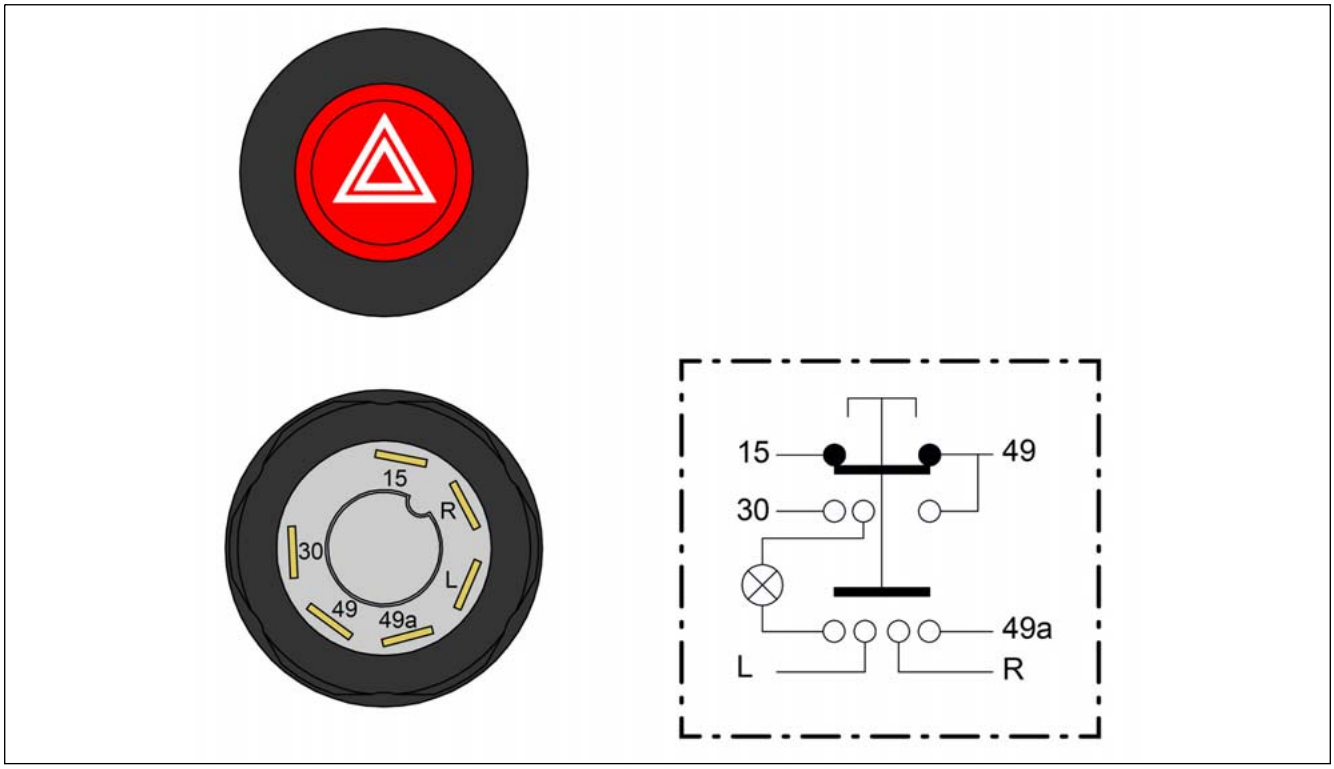

Pin assignment of S019

PIN	Connection S019	Component	Measuring range
1	15	Power supply F025/20A	12 V
2	–	–	–
3	30	Power supply F080/20A	12 V
4	31b	Output to the blink relay K010 (C2)	12 V
5	49a	Output to the blink relay K010 (49a) Output to the steering column switch S012 (49a)	12 V
6	L	Output to left headlight H076 (5) Output to left tail light H078 (1) Output to rear socket XX01 (1) Output to front socket XX02 (L1)	12 V
7	R	Output to right headlight H077 (5) Output to right tail light H079 (1) Output to rear socket XX01 (4) Output to front socket XX02 (6)	12 V

9.11 Control of 7-pole rear socket

Overview: control of 7-pole rear socket

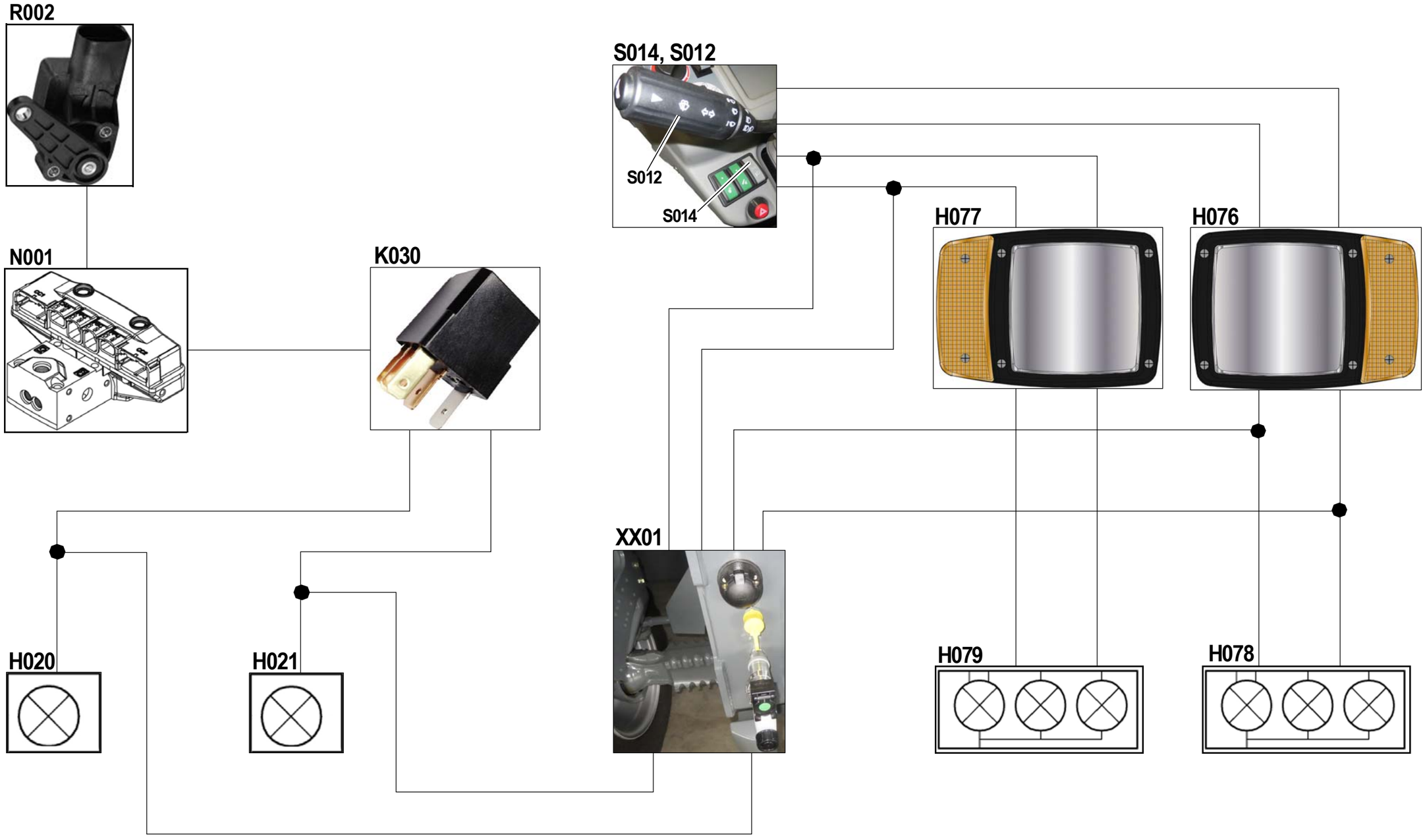

Description of 7-pole rear socket XX01

Pos.	Component	Remarks
H020	Brake lights	12 V
H021	Brake lights	12 V
H076	Combined front left light	12 V
H077	Combined front right light	12 V
H078	Combined rear left light	12 V
H079	Combined rear right light	12 V
K030	Brake lights switching relay	12 V
N001	Traction electronics	–
R002	Inching pedal	5 V
S012	Steering-column control lever	12 V
S014	Light switch	12 V
XX01	Rear power outlet	7-pole

Pin assignment on the rear plug receptacle XX01

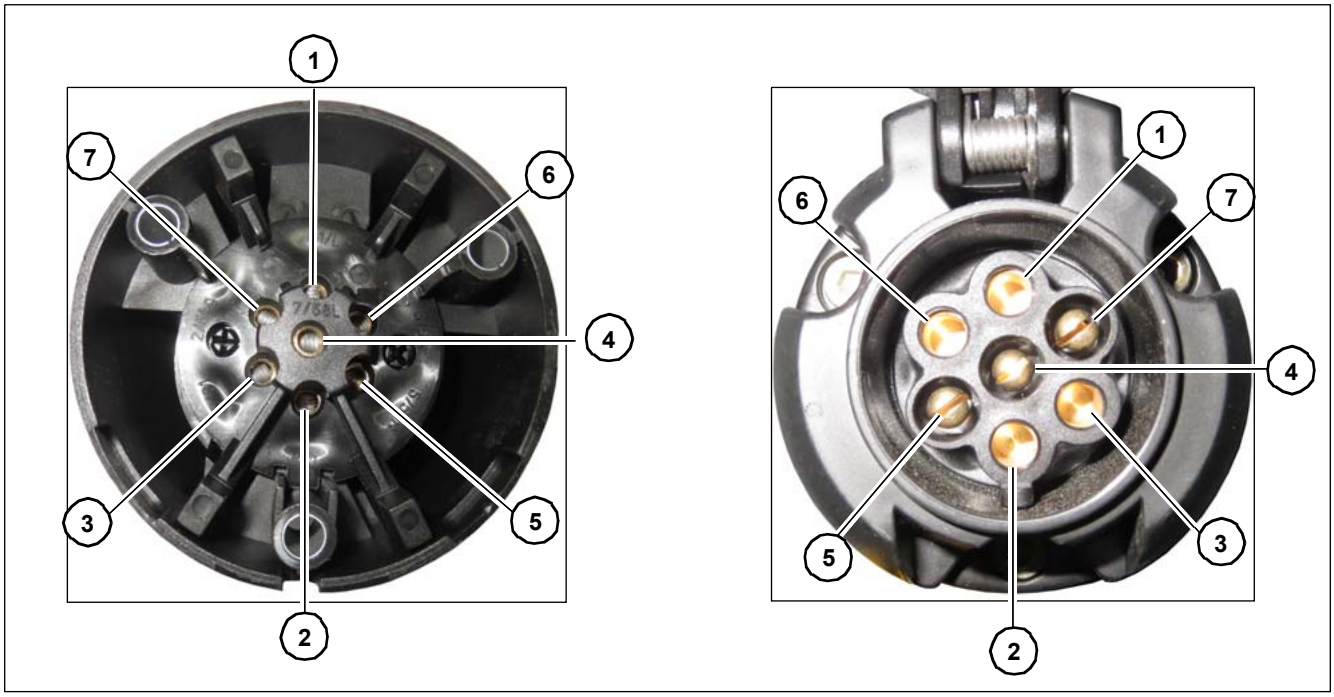

Pos.	Cable colour	Connection XX02	Remarks
1	BK/WH	L/1	Left blinker from S012 (L) and S019 (L)
2	BK/GN	R/4	Right blinker from S012 (R) and S019 (R)
3	BK	31/3	Ground
4	GY/BK	58L/7	H078 left tail lamp
5	GY/RD	58R/5	H079 right tail lamp
6	RD	54/6	Output from brake light switching relay K030 (4)
7	–	–	–

9.12 Joystick control

Control of joystick D002

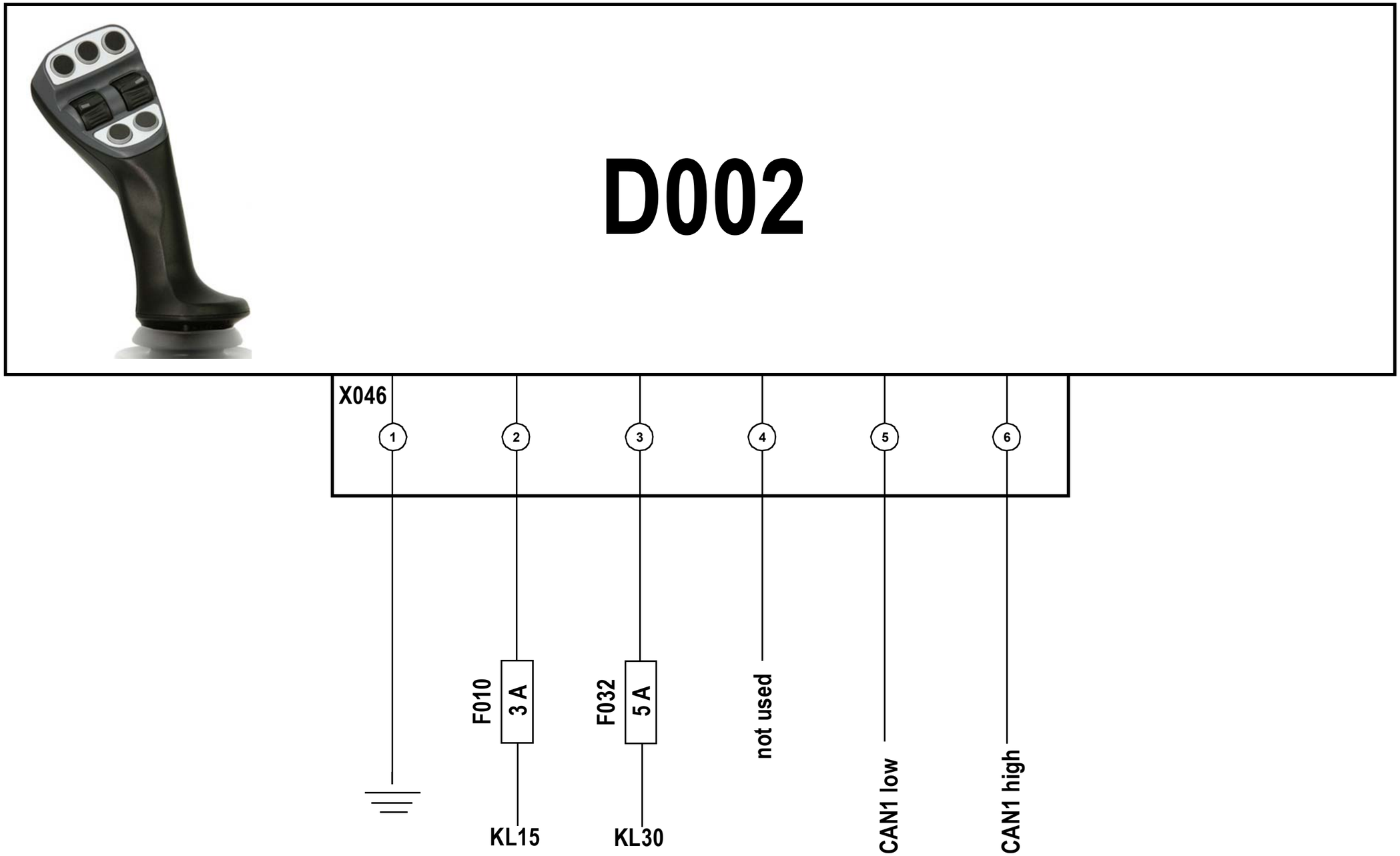

Description of joystick D002

Components

Pos.	Component	Remarks
D002	Joystick	CAN1

PIN	Component	Measuring range
1	Ground (KL31)	Ground/cab
2	Switched voltage supply F010/3 A (KL15)	12 V
3	Voltage supply F032/5A (KL30)	12 V
4	–	–
5	CAN 1	low
6	CAN 1	high

9.13 Control of safe load indicator P006

Control of safe load indicator P006

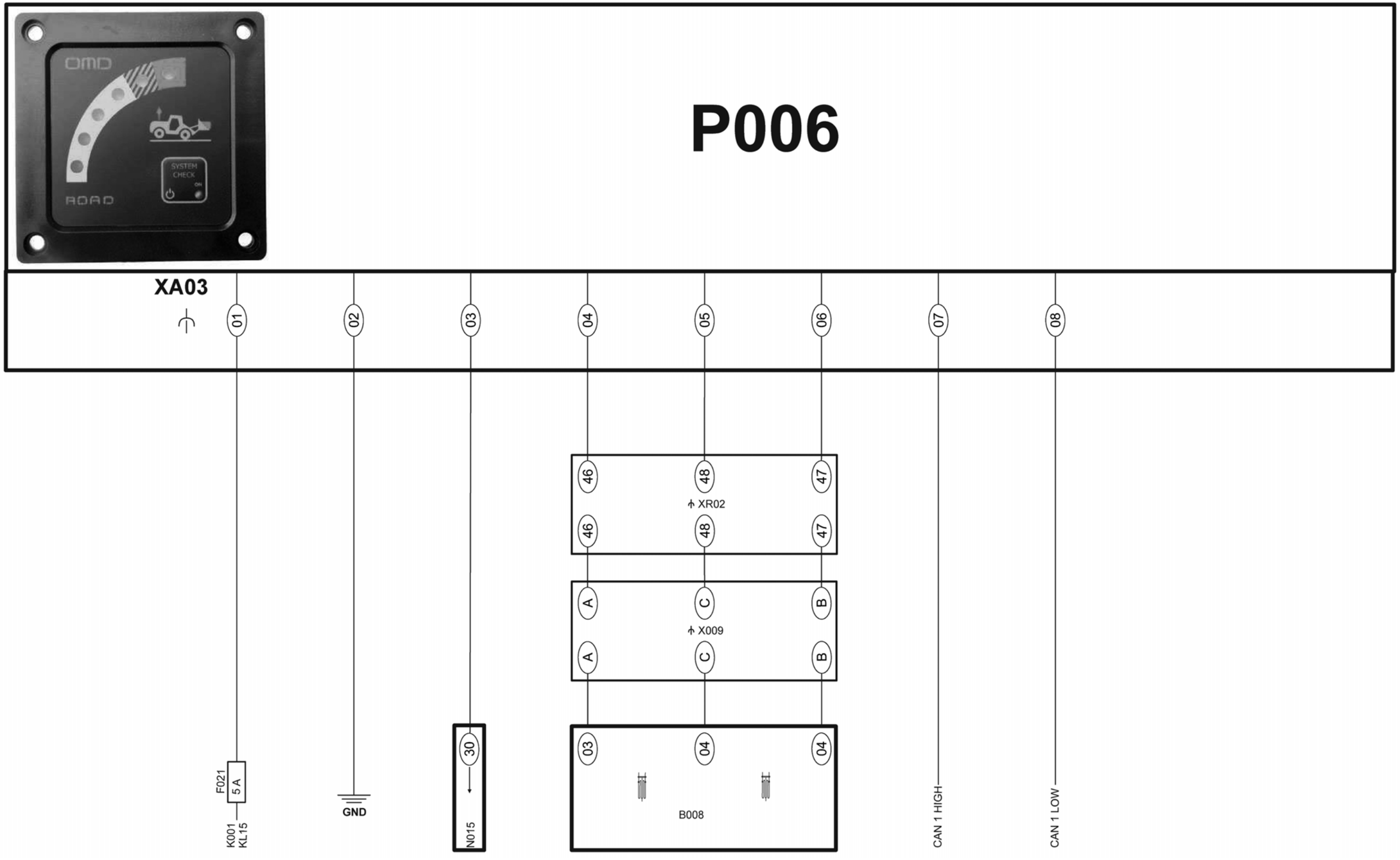

Description of safe load indicator P006

Pos.	Component	Remarks
P006	Safe load indicator	-

Connec-tor	Pin	Component number	Name of component
XA03	01	F021	Power supply (K001/ KL15)
XA03	02	Ground	Earth connection
XA03	03	N015	Cabin electronics
XA03	04	B008	Load sensor – strain gage
XA03	05	B008	Load sensor – strain gage
XA03	06	B008	Load sensor – strain gage
XA03	07	CAN 1 High	Work hydraulics CAN 1 HIGH
XA03	08	CAN 1 LOW	Work hydraulics CAN 1 LOW

9.14 Adjusting the safe load indicator P006

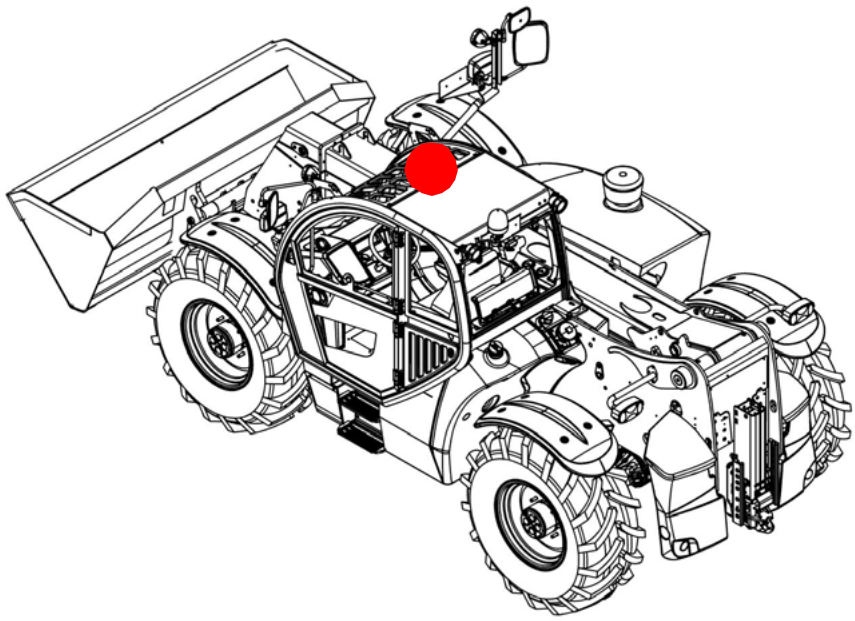

	Value	KCN	Remark/designation	
		P006	Safe load indicator	
For non-specified tightening torques, see chapter “Introduction/tightening torques”				

Information

Position a load of **approx. 1300 – 1800 kg** (2866 – 3968 lb) in front of the machine so that it can be picked up without having to move the machine

The machine must not be moved during the entire calibration procedure!

Calibrating the safe load indicator P006

0%-point calibration

Perform 0 % calibration without an attachment

1. Park the machine on horizontal, level and firm ground.
2. Apply the parking brake.
3. Retract telescopic boom **A** as far as it will go

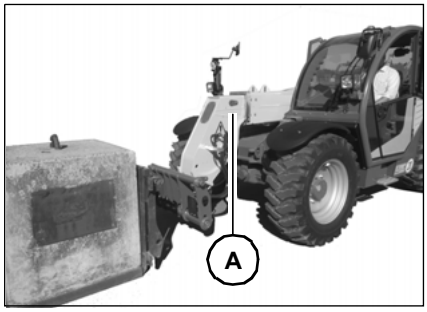

4. Raise telescopic boom **B** as far as it will go (0 % load)
5. Stop the diesel engine and the starter.

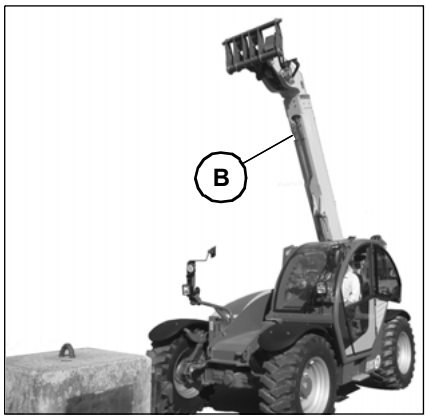

6. Press and hold button **S** on safe load indicator **P006**
7. Start the diesel engine and keep button **S** pressed until LED **05** illuminates. Keep button **S** pressed until LED **05** goes out.
8. Release button **S**

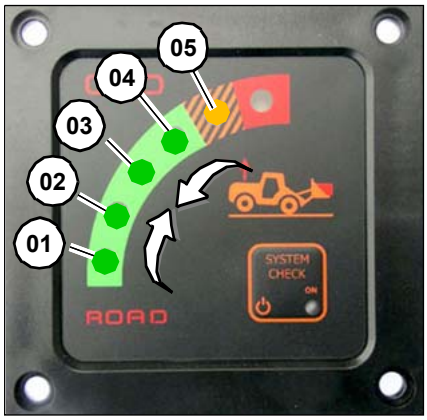

➥ LEDs can be seen going inward from **01** to **03** and from **05** to **03**.
➥ A warning sounds.

The next step must be performed within 10 s – as soon as the LED 03 lights up.

Otherwise the calibration procedure is cancelled, and calibration has to be enabled again.

9. Wait until LED **03** illuminates.
10. Briefly press push button **B**

➥ LED **01** illuminates.

Information

The machine must be at a complete standstill before step 11 is performed.

► If the machine is still oscillating, this can lead to error**604** at a later time.

11. If the machine no longer oscillates and is at a complete standstill, press push button **S** again briefly

➥ LEDs **01** to **03** illuminate.

Information

Do not move the machine and telescopic arm!

► The 0 % point is adjusted internally in safe load indicator **P006**

12.Wait until LED **06** illuminates.

The 0% calibration is completely set.

Information

Now the 100 % point has to be calibrated.

► *– see “Calibrating the 100 % point” on page 9-89*.

Calibrating the 100 % point

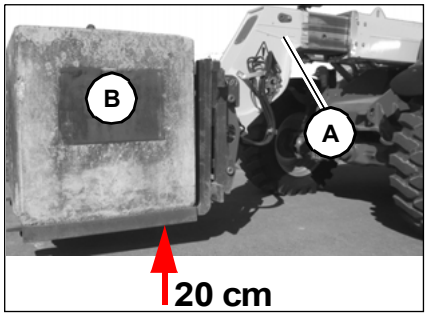

1. Lower telescopic arm **A** and pick up a weight of **approx. 1300 – 1800 kg (2866 – 3968 lb)** and lock it without moving the telehandler.

> **Information**
>
> The weight must not slip during calibration.

2. Raise telescopic arm **A** approx. 20 cm (11.8 in) above the ground.

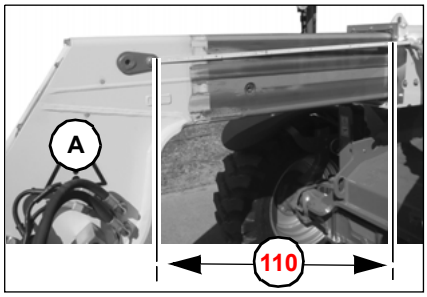

3. Extend telescopic boom **A** horizontally until the rear wheels are slightly lifted off the ground.
4. Measure the extension dimension as exemplified in the imaged with 110 cm (43.3 in).

Calculating the setting dimension E

The following calculation serves as an example.

Setting dimension **E** = extension dimension 110 cm (43.3 in) – 60%

Result: 110 cm (43.3 in) - 60%= 44 cm (17.3 in)

Example of calculation

- 60 x 110 = 6600
- 6,600 : 100 = 66
  ➥ 110 cm (43.3 in) - 66 = 44 cm (17.3 in)

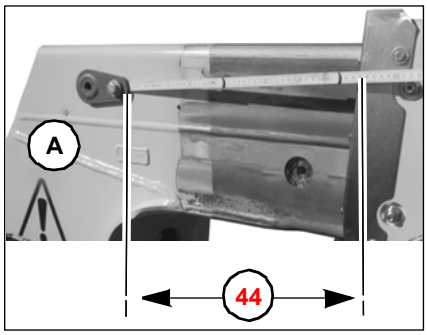

5. Retract telescopic **A**66 (26 in) cm
   ➥ The telescopic arm **A** is now extended 44 cm (17.3 in)

> **Information**
>
> The machine must be at a complete standstill before step 6 is performed. (at least 5 s)
>
> ► If the machine is still oscillating, this can lead to error**604** at a later time.

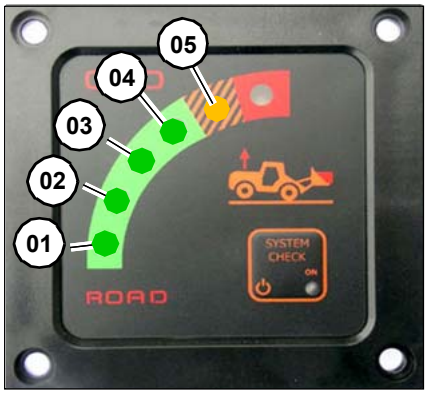

6. If the machine no longer oscillates and is at a complete standstill, press push button **S** again briefly
   ➥ A warning sounds.

   ➥ LEDs **01** to **05** flash at the same time.
   ➥ The 100% calibration is completely set.

Safe load indicator P006 is calibrated now.

Checking calibration

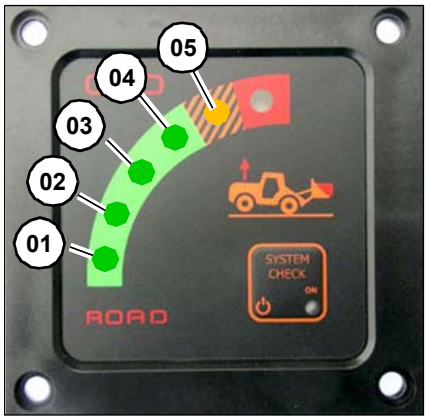

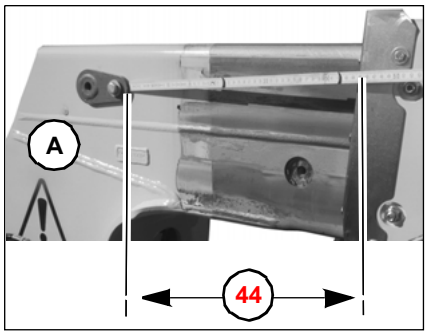

1. Diesel engine and starter OFF.
2. After 30 s Start the diesel engine.
3. The same weight must be used as before during calibration.
4. Lower telescopic arm **A** and pick up a weight of **approx. 1300 – 1800 kg (2866 – 3968 lb)** and lock it without moving the telehandler.

Information

The weight must not slip during calibration.

5. Fully retract the telescopic boom.
   ➥ LEDs **01** to **03** illuminate.
6. Raise telescopic boom **A** approx. 20 cm above the ground.
7. Slowly extend the telescopic arm horizontally until the overload protection is activated (the telescope function is locked).
   ➥ LEDs **01** to **05** flash.
8. The pre-determined setting dimension of 44 cm (17.3 in) must not be undershot during shut-down.
   ➥ If the setting dimension is exceeded, repeat the complete calibration procedure.

Calibration is finished successfully.

Error code during normal operation

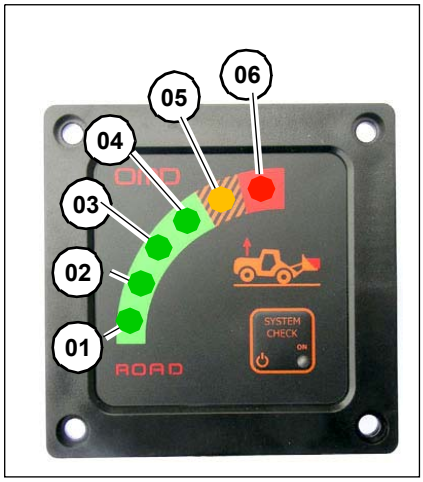

LED colours

01 – 04 = green

05 = orange

06 = red

01	02	03	04	05	06	Error	Cause
						Time-out	Internal, program flow does not react within the expected time
						Digital output error	Digital output does not react as expected
						Redundancy	Difference of sensor current in cells A & B > 5 %
						Control unit error	Control unit not found, no answer or incorrect answer
						Calculation error	Internal, calculation beyond threshold value
						Beyond range	Sensor current too high, sensor short circuit
						Uncalibrated	System has not been calibrated
						Boom angle supplies incorrect signal or none at all	See error display in diagnostic tool
						Below range	Sensor current too low, sensor not connected
						Limit switch supplies incorrect signal	See error display in diagnostic tool
						Incorrect on-board voltage	
						Telescopic arm not or incorrectly calibrated	
						Incorrect +5 V supply	
						Release switch supplies incorrect signal	
						Limit switch not correct	
						Malfunctioning proportional valve	
						Release switch bypassed/ pressed too long	

Error codes in calibration mode

01	02	03	04	05	06	Error	Cause
						Calibration failed	Invalid measured value/difference between min and max too small/sensor current outside the tolerance
						Beyond range	Sensor current too high, no compensation possible
						Below range	Sensor current too low, no compensation possible

9.15 Load sensor B008

Remove/install load sensor

Preparing work

Operating supplies:

- Loctite® 7063
- Loctite® 638
- Terostat 450
- Terostat MS 939

Technical data

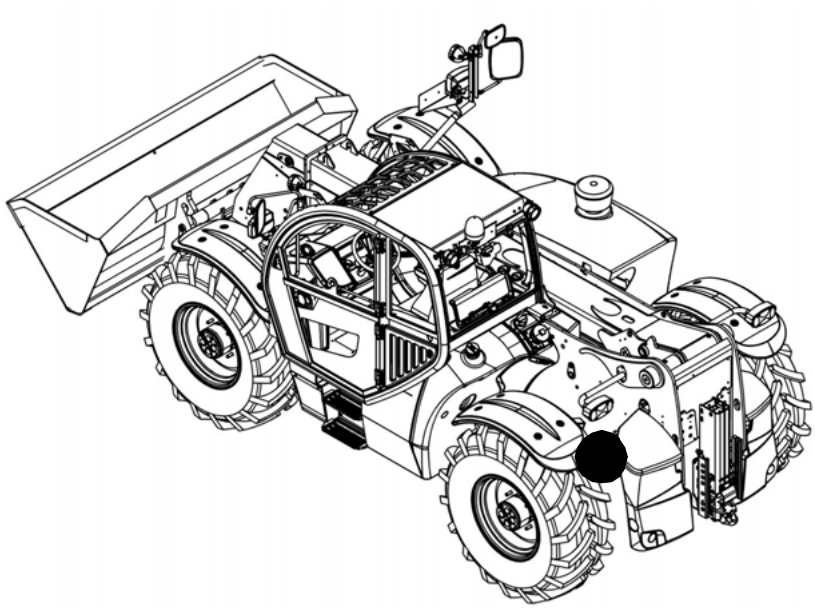

	Value	KCN	Remark/designation	
		B008	Load sensor	
For non-specified tightening torques, see chapter “Introduction/tightening torques”				

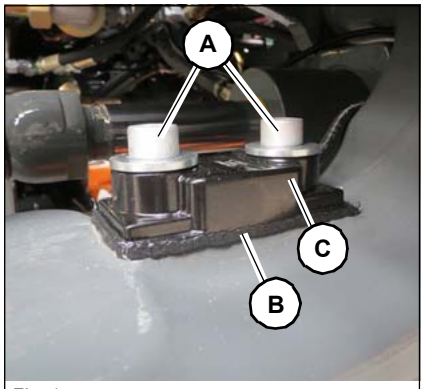

Fig. 1

Removing

1. Disconnect cable from the wiring harness.
2. Remove screws **A**.
3. Cut open glue line **B**.
4. Carefully release the sensor **C B008** from the mounting surface.

Installation

Basically, a new load sensor **B008** has to be used with new screws!

WARNING

Risk of injury due to incorrect functioning of load sensor!

If the load sensor is not installed properly this can lead to serious injuries.

► During assembly, basically always one new load sensor is used with new screws.

► The bushings may not be taken out of the sensor

► During assembly use only the assembly components and cleaning agents as indicated.

► Observe information and expiry date on packaging or containers of assembly components and cleaning agents!

► Shaft and sensor need to be at the same temperature for assembly
(min. 10°C(50°F)).

Fig. 2

- The surfaces of the load sensor **B008** may not be touched.
- Make sure that the bushings from the load sensor **B008** do not fall out.

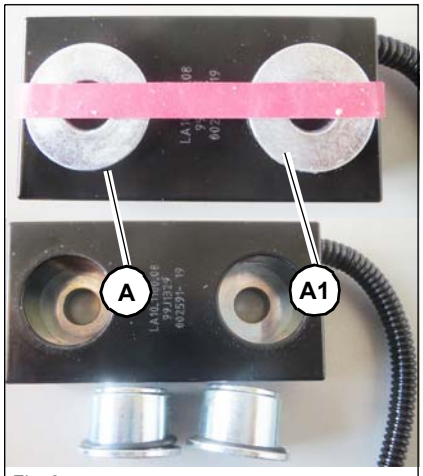

Fig. 3

- When delivered, the bushings are affixed with a rubber band.
- If bushings fall out of the load sensor **B008** check that the surface has not suffered any deformation or damage. If there is no damage or deformation to be seen, clean bushings and load sensor **B008** thoroughly.

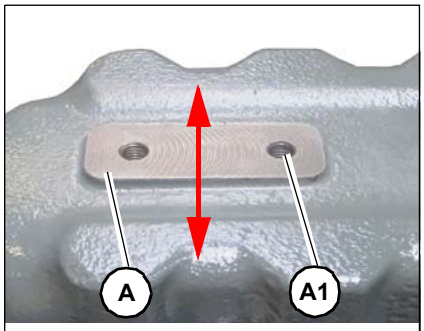

Fig. 4

It is essential that the following steps are observed:

1. Rethread both threads **A1** (M10) at 90 ° to the installation surface **A** on the rear axle.
2. Clean the installation surface **A** across to the axle with sandpaper (180 graining) (shiny metallic). See fig. 212
   ➥ All remains of adhesive must be fully removed from the installation surface **A**.
3. Blow clean the threaded bores **A1** thoroughly.
4. Check the depth of thread with a hexagon head cap screw M10 x 20 mm. Screw the screw fully by hand.
   ➥ The thread length is OK if the screw head of the hexagon head cap screw rests completely on the installation surface **A**.

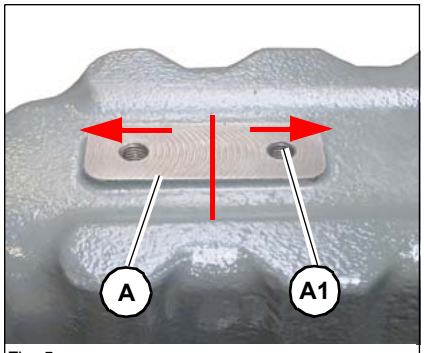

Fig. 5

5. Wipe the mounting surface **A** at the rear axle with a lint-free cloth, dampened with Loctite® 7063, wiping away from the centre of the surface.
6. Blow clean the threaded bores **A1** again thoroughly.
7. Wipe the mounting surface **A** at the rear axle with a lint-free cloth, dampened with Loctite® 7063, wiping away from the centre of the surface.

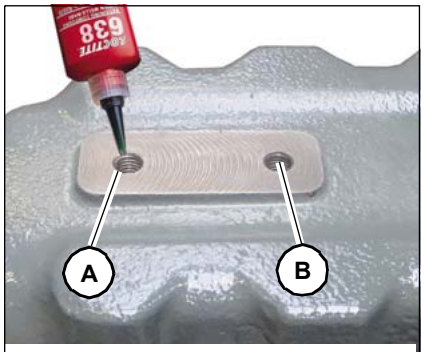

Fig. 6

8. Apply a drop of Loctite® 638 each to both threads **A** and **B** .

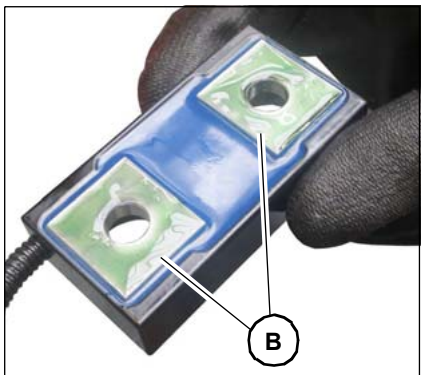

Fig. 7

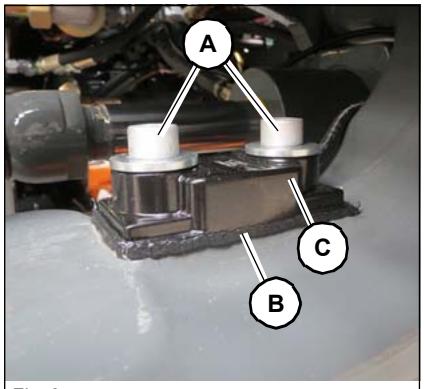

Fig. 8

9. Clean the new load sensor with a lint-free cloth, dampened with Loctite® 7063.
10. Apply Loctite® 638 evenly to the mounting surfaces **B** on the new load sensor **B008** .
11. Position the mounting surfaces **B** of the new load sensor **B008** on the mounting surface **A** of the rear axle.
12. Use new screws **A** (M10 x 35, 12.9).
    - ➥ Biasing torque 20 Nm (14.8 ft.lb)
    - ➥ Torque setting 70 Nm (51.6 ft. lbs)
13. Clean the gap **B** between load sensor **C B008** and rear axle with a clean brush and Terostat 450.
14. Seal the gap **B** between load sensor **C B008** and rear axle with Terostat MS 939. Start in the middle of the long side of the load sensor.
15. Insert cable into wiring harness.

Notice

If the vehicle is moved immediately after installation of the load sensor, the load sensor can become loose.

► Do not move the vehicle for at least 6 hours.

16. Recalibrate overload warning device – *see "Calibrating the safe load indicator P006" on page 9-86*.

9.16 Setting the position pickup B028

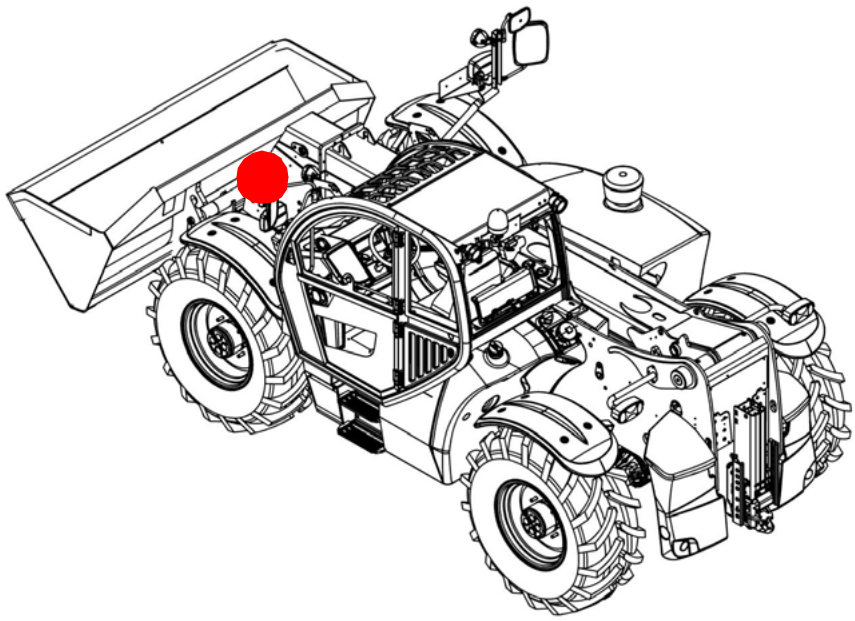

	Value	KCN	Remark/designation	
		B028	Position pickup for bucket repositioning	
For non-specified tightening torques, see chapter “Introduction/tightening torques”				

Function description

If touch button **S092**(bucket repositioning) on the joystick **D002** is pressed, a CAN message is transmitted to controller **N004**. The proportional valves for tilting in **Y068** and dumping out **Y069** are controlled via a characteristic curve. The characteristic curve is influenced in relation to the position pickup **B028** (bucket repositioning automatics). The transducer **B028** transmits the values to controller **N004** and the empty shovel **Y068** and fill shovel **Y069** proportional valves are controlled.

Position pickup B028 (bucket repositioning)

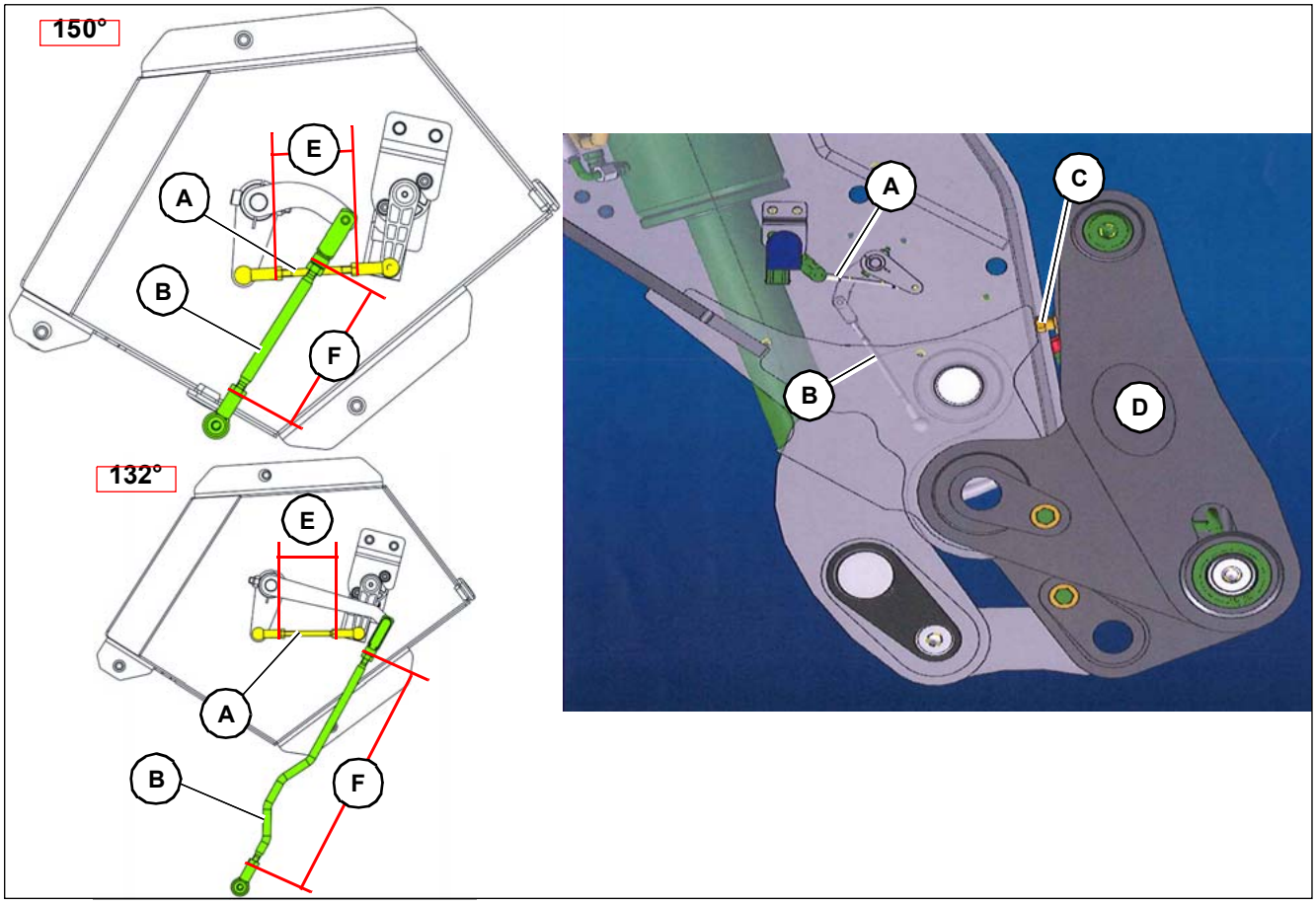

Check tilt limit

1. Tip supporting plate **D** all the way.
   ➥ The stops **C** must touch the lifting arm.

Set tilt stops

1. Rotate stops **C** all the way.
2. Completely tilt supporting plate **D** (until the tipping cylinder is extended all the way).
3. Place stops **C** on the lifting arm. Rotate the stop screw half a revolution and secure.

Basic adjustment of the rod assembly for the position pick-up of the bucket retraction automatics B028

Loader unit	150°	132°
Rods **A** (Clearance **E**)	55 mm	
Rods **B** (clearance **F**)	102,7 mm	239 mm

1. Park the machine on horizontal, level and firm ground.
2. Apply the parking brake.
3. Connect the diagnosis tool.
4. Start the diesel engine.
5. Tip supporting plate **D** to the detent.
   ➥ For a tipped supporting plate**D** the value for
   150° loader unit: 0.6 – 1.3 V
   132° loader unit: = 0.6 – 1.14 V
6. Tip out supporting plate **D** to the detent.
   ➥ For an emptied supporting plate **D** the value for
   150° loader unit: 3.7 – 1.3 V
   132° loader unit: = 3.86 – 1.14 V

Start calibration with diagnosis tool

➥ Follow the instructions provided by the diagnosis tool

9.17 Setting the rotary angle sensor R023

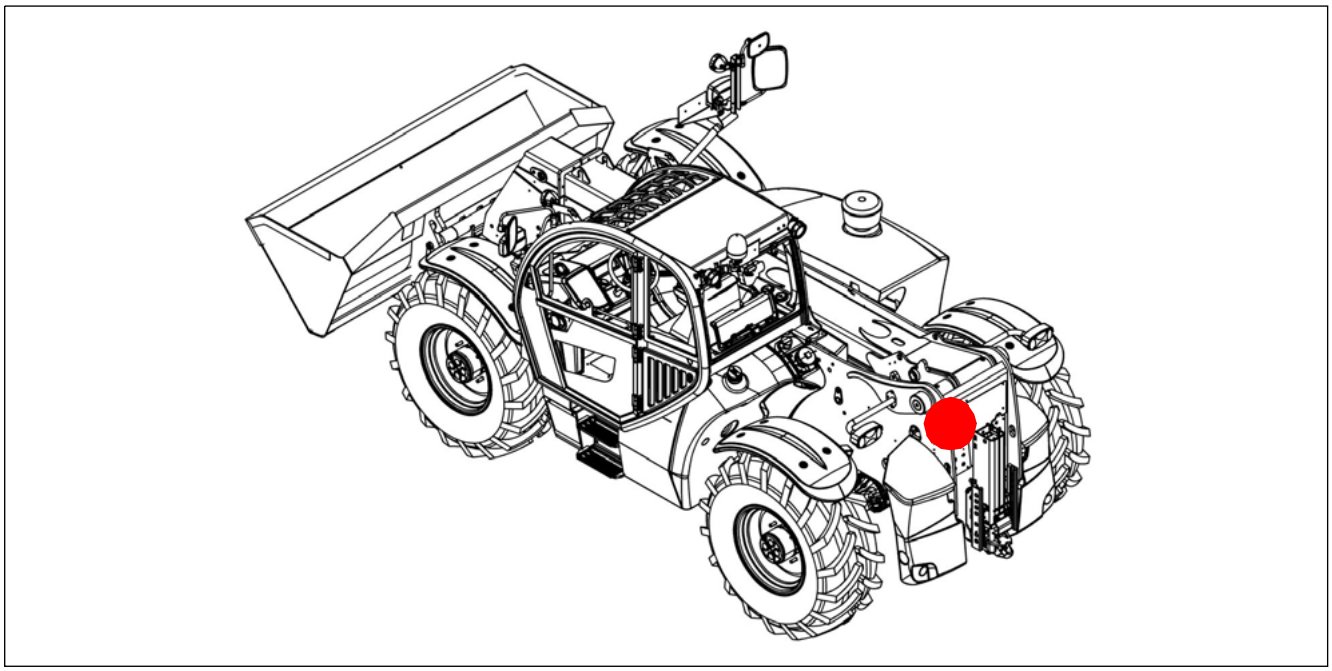

	Value	KCN	Remark/designation	
		R023	Rotary angle sensor	
For non-specified tightening torques, see chapter “Introduction/tightening torques”				

Function description

Together, the boom angle sensor **R023** and the load sensor (strain gauge) **B008** ascertain the load limit via a characteristic curve. This prevents the possibility of an overload from occurring.

The boom angle sensor **R023** is needed for limit-position damping. The speed of the boom is reduced via the characteristic curve within a range of 3°- 6° before the end stop.

If the boom is moved without a command from the joystick **D002**, the boom angle sensor **R023** detects a change. This then triggers an error message in display **P014**

Boom angle sensor R023

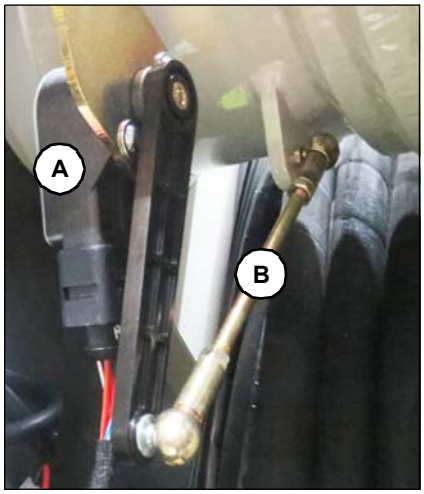

Basic adjustment of rod assembly B of angle sensor A R023

1. Park the machine on horizontal, level and firm ground.
2. Apply the parking brake.
3. Connect the diagnosis tool.
4. Start the diesel engine.
5. Move telescopic arm all the way up while holding down touch button hydraulic shut down **S084.**
   Telescopic arm all the way up:
   ➥ The value must be 2.67 – 4.4 V.
6. Move telescopic arm all the way down.
   Telescopic arm all the way down
   ➥ The value must be 0.6 – 2.33 V.

Adjusting the rod assembly B

Current value too low

➥ Shorten rods **B**

Current rating too high

➥ Extend rods **B**

1. Move telescopic arm all the way down while holding down touch button hydraulic shut down **S084**.
   ➥ The current rating may not be over 4.4 V

- The angle of rotation sensor **A R023** can only be calibrated with the diagnosis tool.

9.18 Inputs for indicating instrument P014

Overview of inputs for indicating instrument P014

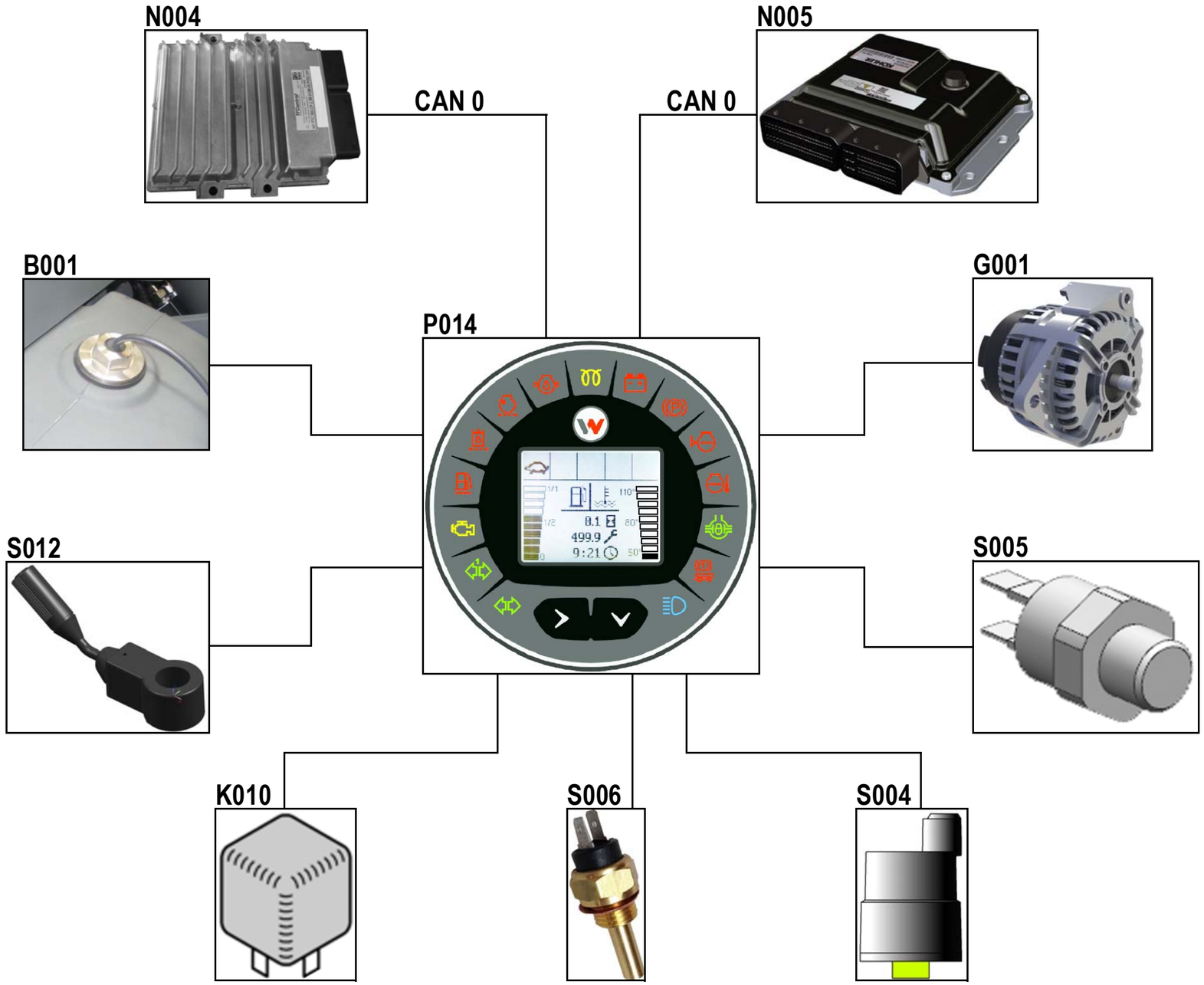

Component description, inputs for indicating instrument P014

Pos.	Component	Remarks
B001	Fuel gauge	–
G001	Alternator	12 V
K010	Turn indicator relay	12 V
N004	Controller	TTC580
N005	Diesel engine electronics	Kohler
P014	Indicating instrument	Bauser
S004	Pressure switch, air filter	–
S005	Pressure switch, hydraulic oil	–
S006	Temperature switch, hydraulic oil	–
S012	Steering-column control lever	12 V

Pin assignment indicating instrument P014, connector XA01

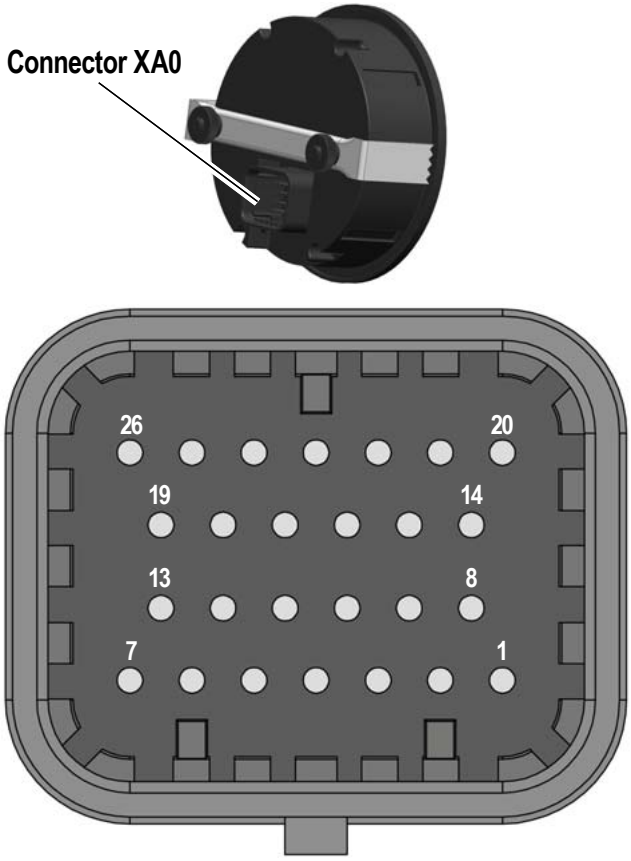

PIN	Measurand	Component (PIN)	Description
1	–	–	–
2	–	–	–
3	Input signal	G001 (B+)	Alternator
4	–	–	–
5	–	–	–
6	–	–	–
7	Input signal	B001	Fuel gauge
8	–	–	–
9	Input signal	S004	Pressure switch, air filter
10	–	–	–
11	–	–	–
12	–	–	–
13	–	–	–
14	–	–	–
15	–	–	–
16	Input signal	S005	Pressure switch, hydraulic oil

Pin assignment indicating instrument P014, connector XA01

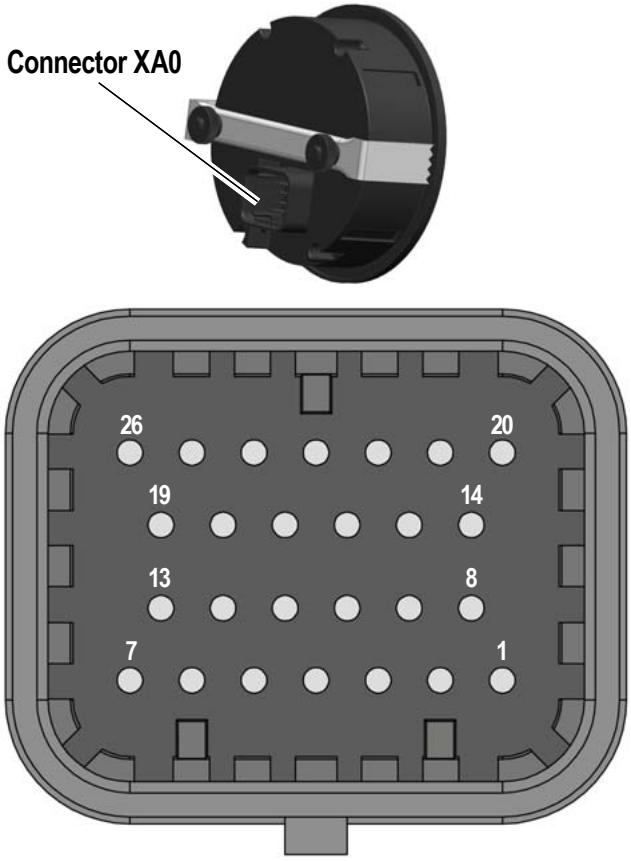

PIN	Measurand	Component (PIN)	Description
17	Input signal	S006 (1)	Temperature switch, hydraulic oil
18	Input signal	K010 (31)	Turn indicator relay
19	Input signal	K010 (49)	Turn indicator relay
20	Input on-board voltage	F023/3 A	K001/tl.15
21	Ground		
22	Input signal	S012 (56a)	Steering-column control lever
23	CAN 0 Low	–	Vehicle CAN
24	CAN 0 High	–	Vehicle CAN
25	–	–	–
26	–	–	–

9.19 Camera (option)

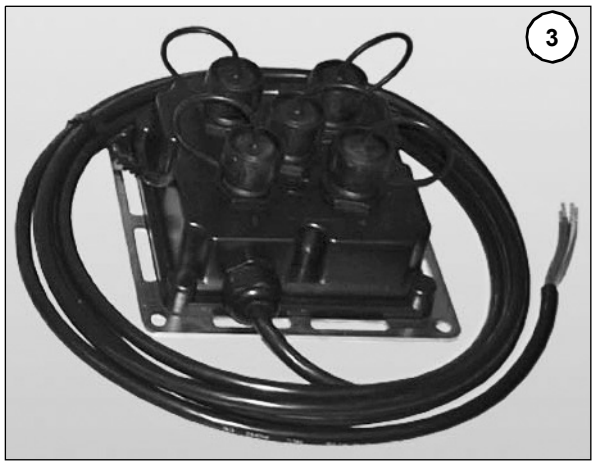

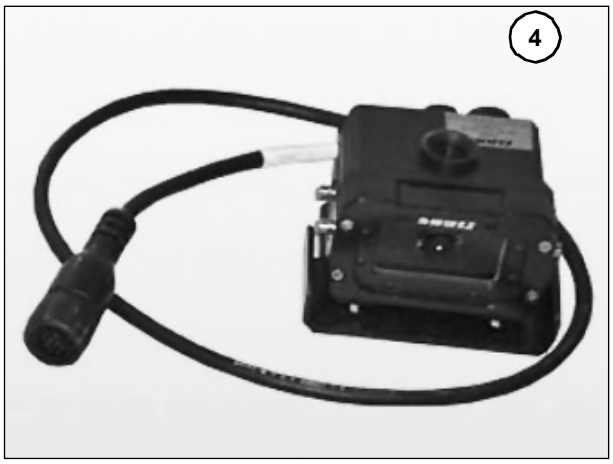

Designation

Pos.	Component
1	Terminal and supply cable
2	Camera cable
3	Switch box
4	Camera

How it works

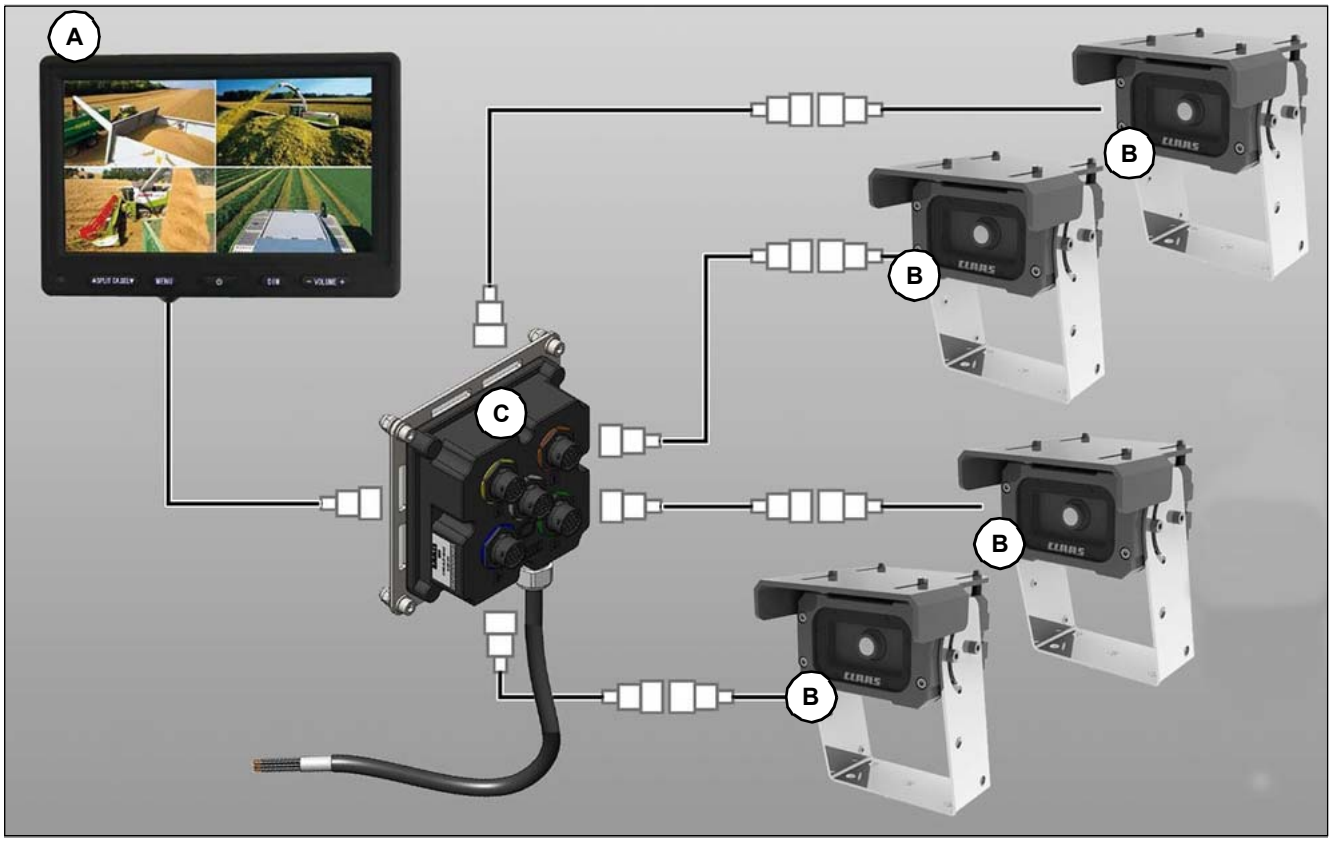

Component	Description
PROFI CAM video system	The PROFI CAM video system is a video transmission system for monitoring machine functions or supporting the operator during reverse travel.
Screen	The monitor **A** allows the separate or simultaneous presentation of up to 4 camera images. Changeover between the separate camera images can be performed either manually or automatically.Automatic control, for example depending on certain machine movements, is ensured with 3 trigger signal inputs. Screen brightness can be set automatically with the integrated light sensor. The screen is dust and spray-water protected.
Camera	The video signal of the PROFI CAM camera **B** is transmitted to the switch box **C** via cable. A video transmitter and antennas are integrated in the housing of the PROFI CAM PLUS camera. A video distributor enables cable-based decoupling of the video signal during radio operation. The colour camera is dust-proof and protected against water during high-pressure and steam-jet cleaning. For work in particularly dirty environments, the camera is equipped with a double front glass that can be unscrewed for cleaning.
Switch box	The switch box **C** interconnects the components of the PROFI CAM video system. It ensures the signal exchange and operating voltage. On the switch box **C**, up to 4 video sources such as cameras **B** and video receivers **D** as well as 1 monitor **A** can be connected to display the camera images. Depending on the camera, the signals are transmitted from the camera to the switch box by either cable or radio transmission. The switch box is dust-proof and protected against water during high-pressure and steam-jet cleaning.

Switch box assignment

Cable assignment A

Colour	Assignment
Brown	GND ground
Black	Input to board voltage from fuse F024/3A (K001/Clamp 15)
Green/yellow	Trigger 1
Gray	Trigger 2
Blue	Trigger 3

Connecting cable assignment

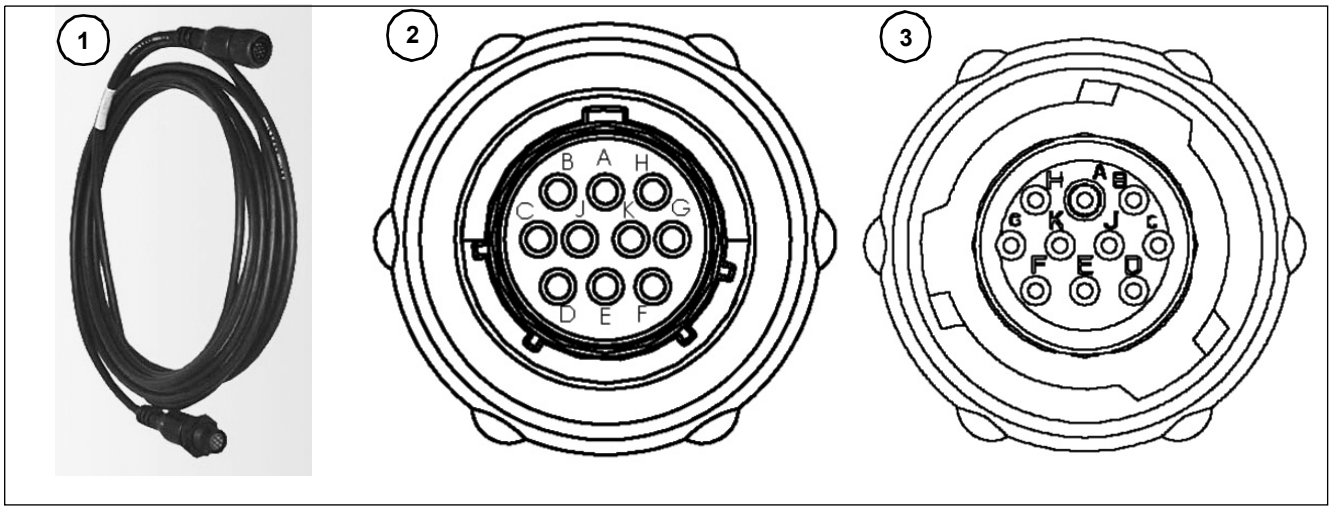

Pos.	Component
1	Cable
2	Cable jack
3	Cable connector

Cable jack/connector assignment

Pos.	Colour	Assignment
A	WH	Trigger 1
B	RT	Video 1
C	BR	Trigger 2
D	GN	Video 2
E	RS	Trigger 3
F	BL	Video 3
G	GE	TxD
H	BL	Video 4
J	GN/GR	12 V
K	Screen	GND

Display mode

Menu	Description
Adjusts the display mode. - Selects the display mode. For each display range: - Selects the display range/source (S1 – S4). - Selects the camera image (CA1 – CA4) for the selected display range.	
SPLIT 1	View 1 with two cameras
SPLIT 2	View 2 with two cameras
PIP	View 1 with three cameras
TRIPLE	View 2 with three cameras
QUAD	View with four cameras

Menu CAM/mode

Submenu	Description
CA1, CA2, CA3, CA4 SPLIT 1, SPLIT 2 PIP TRIPLE QUAD	Enables/disables the camera/display mode. - Selects the submenu for the required camera/required display mode. - Enables the camera connections/display modes used: ON = camera/display mode enabled - Disables the camera connections/display modes not used: OFF = camera/display mode disabled This avoids displaying an empty screen when calling a camera connection that is not assigned.

9.20 Diagrams

Information on working with the diagram

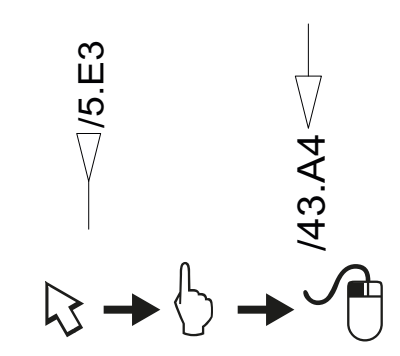

Fig. 9

Jump labels

There are jump labels on each page. These consist of a slash and a number followed by a point. This number is a page number. After the point is a combination of capital letters and a number These refer to drawing quadrants.

If the arrow points away from the jump label, the signal comes from another page. If the arrow points to the jump label, the signal goes to another page.

Example *Fig. 9*:

Jump label	Explanation
/5.E3	The signal comes from page, quadrant E3
/43.A4	The signal continues on page 43, quadrant A4

If you hover over the jump label with the mouse, the arrow turns into a finger. By left clicking the mouse, you will be taken to the page specified in the jump label.

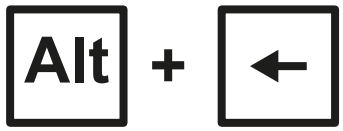

Fig. 10

Jump back

If you would like to jump back to the previous page, use the key combination represented in *Fig. 10*

You can use this key combination until you reach the cover sheet.

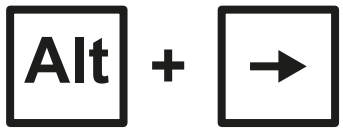

Fig. 11

Jump ahead

If you would like to track the signal again, use the key combination represented in *Fig. 11*.

You can use this key combination until you reach the page on which the signal tracking ended.

circuit diagram

418-02

KRAMER
Kramer Werke GmbH
Wacker Neuson Straße 1 / D- 88630 Pfullendorf
Tel.: +49 (0) 7552 9288 -0
Fax: +49 (0) 7552 9288 -49

Diese Zeichnung darf ohne unsere ausdrückliche Genehmigung weder vervielfältigt, noch dritten Personen oder Mitbewerbern im Original oder als Kopie ausgehändigt werden. Eigentums- und Urheberrecht vorbehalten.

	date	name
User		Inzstuea1
Proved	20.06.2016	Inzkraum
Reading station		

TOC

Mat. -Nr. 1000364531

Doc. -Nr. 2060093317

Revision	03
Ersetzt Version	02
Gewicht in [kg]	

A3

SheetName	SheetName 1	SheetName 2
Inh_01	Blattverzeichnis	-
Inh_02	Blattverzeichnis	-
Inh_03	Blattverzeichnis	-
2	Display	
3	ECU connector	
4	Diesel engine	
5	main fuses circuit board	
6	relay circuit board	
7	MVCU TTC580	
8	Main distribution	
9	Travelling drive	
10	Camera	
11	Safe load indicator OMD II	
12	Immobiliser	
13	brake and Brake lights	
14	Camera	
15	CAN0 and diagnostics Cabin	
16	CAN1 and diagnostics Cabin	
17	CAN and diagnostics Motor	
18	CAN and diagnostics Chassis	
19	Central lubrication system	
20	Supply Control valve	
21	Supply Control valve	
22	Diesel particulate filter external	
23	Operator seat	
24	Diesel engine Cooling	
25	Diesel engine parts	
26	Diesel engine RPM throttle	
27	Diesel engine Start	
28	heating and Air conditioning	
29	Window heating	

KRAMER
Kramer Werke GmbH
Wacker Neuson Straße 1 / D- 88630 Pfullendorf
Tel.: +49 (0) 7552 9288 -0
Fax: +49 (0) 7552 9288 -49

Diese Zeichnung darf ohne unsere ausdrückliche Genehmigung weder vervielfältigt, noch dritten Personen oder Mitbewerbern im Original oder als Kopie ausgehändigt werden. Eigentums- und Urheberrecht vorbehalten.

	date	name
User		lnzkraum
Proved		
Reading station		

Blattverzeichnis
-

Mat. -Nr. 1000364531 Doc. -Nr. 2060093317

Revision
Ersetzt Version
Gewicht in [kg]

Inh_01/105

A3

SheetName	SheetName 1	SheetName 2
30	illumination	
31	Working head lamps	
32	Indicating instrument	
33	Radio	
34	Safe load indicator system	
35	Electrical power supply	
36	PTO shaft	
37	Quickhitch facility	
38	Pressure relief	
39	Reversing light	
40	Load stabiliser	
41	Rotating beacon	
42	Horn and Light warning buzzer	
43	Differential lock	
44	Front power outlet 14-Pin	
45	Front power outlet 7-Pin	
46	Power outlet 12 V power outlet	
47	Steering mode switch	
48	switch illumination	
49	Travelling drive	
50	Sensor Telescopic boom	
51	valve Telescopic boom	
52	Rear three-point power lift	
53	Autohitch trailer coupling	
54	Trailer brake	
55	Turn indicator system	
56	Wiper system	
57	Earth Splice EBW	
58	Earth Splice FRW	
59	Earth Splice CBW	
BMK_01	Betriebsmittelverzeichnis	-

KRAMER
Kramer Werke GmbH
Wacker Neuson Straße 1 / D- 88630 Pfullendorf
Tel.: +49 (0) 7552 9288 -0
Fax: +49 (0) 7552 9288 -49

Diese Zeichnung darf ohne unsere ausdrückliche Genehmigung weder vervielfältigt, noch dritten Personen oder Mitbewerbern im Original oder als Kopie ausgehändigt werden. Eigentums- und Urheberrecht vorbehalten.

	date	name
User		lnzkraum
Proved		
Reading station		

Blattverzeichnis
-

Mat. -Nr. 1000364531 Doc. -Nr. 2060093317

Revision
Ersetzt Version
Gewicht in [kg]

A3

SheetName	SheetName 1	SheetName 2
BMK_02	Betriebsmittelverzeichnis	-
BMK_03	Betriebsmittelverzeichnis	-
BMK_04	Betriebsmittelverzeichnis	-
BMK_05	Betriebsmittelverzeichnis	-
BMK_06	Betriebsmittelverzeichnis	-
BMK_07	Betriebsmittelverzeichnis	-
BMK_08	Betriebsmittelverzeichnis	-
BMK_09	Betriebsmittelverzeichnis	-
BMK_10	Betriebsmittelverzeichnis	-
BMK_11	Betriebsmittelverzeichnis	-
BMK_12	Betriebsmittelverzeichnis	-
BMK_13	Betriebsmittelverzeichnis	-
BMK_14	Betriebsmittelverzeichnis	-
BMK_15	Betriebsmittelverzeichnis	-
BMK_16	Betriebsmittelverzeichnis	-
BMK_17	Betriebsmittelverzeichnis	-
BMK_18	Betriebsmittelverzeichnis	-
BMK_19	Betriebsmittelverzeichnis	-

KRAMER
Kramer Werke GmbH
Wacker Neuson Straße 1 / D- 88630 Pfullendorf
Tel.: +49 (0) 7552 9288 -0
Fax: +49 (0) 7552 9288 -49

Diese Zeichnung darf ohne unsere ausdrückliche Genehmigung weder vervielfältigt, noch dritten Personen oder Mitbewerbern im Original oder als Kopie ausgehändigt werden. Eigentums- und Urheberrecht vorbehalten.

	date	name
User		lnzkraum
Proved		
Reading station		

Blattverzeichnis
-

Mat. -Nr. 1000364531
Doc. -Nr. 2060093317

Revision
Ersetzt Version
Gewicht in [kg]

A3

+CB -P014		Display 819.5		
PIN		PIN or CAN	DESCRIPTION	Ref-PAGE
1	LED12	PIN / CAN	engine coolant temperature	
2	LED8	PIN / CAN	pre-heat / wait to start lamp	
3	LED9		battery charging	/25.A3
4		PIN	throttle valve	
5		PIN	optional	
6	LED14	PIN	pressure sensor trailer brake	
7	LCD	PIN	fuel level	/32.A2
8	LED7	PIN / CAN	engine oil pressure	
9	LED6	PIN / CAN	air filter blocked	/32.A4
10	LCD	PIN / CAN	front axle steering	
11	LCD	PIN / CAN	all wheel steering	
12	LCD	PIN / CAN	fast speed / low speed	
13	LCD	PIN / CAN	dog gear	
14	LCD	PIN / CAN	synchronism	
15	LED10	PIN / CAN	parking brake	
16	LED5	PIN / CAN	hydraulic oil filter blocked	/32.A5
17	LCD	PIN / CAN	hydraulic oil temperature high	/24.A5
18	LED1	PIN	turn light	/55.D4
19	LED2	PIN	turn light trailer	/55.D4
20	+UB	PIN	Power +	/20.D6
21	GND	PIN	GND	
22	LED15	PIN	high beam	/30.E6
23		PIN	CAN L	/15.A4
24		PIN	CAN H	
25	LED13	PIN / CAN	differential lock	
26	LED11	PIN / CAN	engine coolant level	
	LED4	CAN	water in fuel	
	LED3	CAN	engine warning	

KRAMER
Kramer Werke GmbH
Wacker Neuson Straße 1 / D- 88630 Pfullendorf
Tel.: +49 (0) 7552 9288 -0
Fax: +49 (0) 7552 9288 -49

Diese Zeichnung darf ohne unsere ausdrückliche Genehmigung weder vervielfältigt, noch dritten Personen oder Mitbewerbern im Original oder als Kopie ausgehändigt werden. Eigentums- und Urheberrecht vorbehalten.

	date	name
User		Inzstuea1
Proved	20.06.2016	Inzkraum
Reading station		

Display

Mat.-Nr. 1000364531 Doc.-Nr. 2060093317

Revision	03
Ersetzt Version	02
Gewicht in [kg]	

A3

+EB -N005		ECU A Connector	
PIN	SIGNAL	DESCRIPTION	Ref-PAGE
61		T-MAP sensor	/4.A1
14			
23			
38			
43		Crankshaft sensor	/4.A2
19			
46			
42		Camshaft sensor	/4.A2
18			
24			
31		Fuel temp. sensor	/4.A2
39			
7		Coolant temp. sensor	
49			/4.A4
73			
74	IN	Injector 1	
3	IN	Injector 2	
26	IN	Injector 3	
51	IN	Injector 4	
16		Rail pressure sensor	/4.A3
40			
41			
45			

+EB -N005		ECU A Connector	
PIN	SIGNAL	DESCRIPTION	Ref-PAGE
21	OUT	Hand accelerator power supply 1 (primary) (HT1)	
32	IN	Hand accelerator sensor track 1 (primary) (HT1)	
58	OUT	Hand accelerator GND 1 (primary) (HT1)	
8	OUT	Hand accelerator GND 2 (secondary) (HT2)	
36	IN	Hand accelerator sensor track 2 (secondary) (HT2)	
86	IN	Tacho output	
79	IN	Neutral	
68	OUT	Grid heater lamp	
69	OUT	MIL lamp	
70	OUT	Check engine lamp	
72	OUT	Water in fuel lamp	
71	OUT	Grid heater	
88	OUT	Variable speed electric fan	
87	OUT	Low speed electric fan	
67	OUT	High speed electric fan	
34	IN	Fuel level sensor	
35	IN	Fuel pressure switch	/22.D7
9	OUT	Fuel inlet pressure GND	
10	OUT	Hydraulic pressure GND	
13	OUT	Air filter differential pressure GND	
15	OUT	Fuel level GND	
37	IN	Hydraulic pressure sensor	
63	IN	Fuel inlet pressure sensor	
91	OUT	Starter motor relay output	/27.E4
83	IN	Isochronous switch	
82	OUT	PTO switch 1	
47	IN	Fuel inlet pressure/Hydraulic Pressue power supply	
80	IN	Optional switch	
94	OUT	Lift pump relay output	/27.E5
11	OUT	Vehicle speed GND	
78	IN	Water in fuel switch	/25.D4

+EB -N005		ECU B Connector	
PIN	SIGNAL	DESCRIPTION	Ref-PAGE
55	IN	PTO switch 2	
16	OUT	Sensor GND	
47	IN	Ignition	/20.E7
48	IN	Ignition	
36	OUT	Coolant temperature output	
23	OUT	Main accelerator power supply 1 (primary) /ACC1)	
24	IN	Main accelerator sensor track 1 (primary) /ACC1)	
25	OUT	Main accelerator GND 1 (primary) /ACC1)	
10	OUT	Main accelerator power supply 2 (primary) /ACC2)	
11	IN	Main accelerator sensor track 2 (primary) /ACC2)	
12	OUT	Main accelerator GND 2 (primary) /ACC1)	
38	IN/OUT	J1939 CAN-H	/17.E3
39	IN/OUT	J1939 CAN-L	
41		Brake switch	
30	IN	Vehicle speed/Variable speed electri fan limit	
9	OUT	Air filter differential pressure supply	
53	IN	Dirty air filter switch	
21	IN	Air filter differential pressure sensor	
43	IN	Optional sensor	
42	IN	Fuel level switch	
2	IN	Signal GND	/22.D5
1	IN	Signal GND	
4	IN	Signal GND	
3	IN	Signal GND	
5	IN	Power supply	/20.D3
6	IN	Power supply	
46	IN	Power supply	
33	OUT	Main relay commend	/27.E3
34	OUT	Main relay command	
54	IN	12V command to ECU (starter motor)	/27.E6
51	IN/OUT	EGR valve (CAN)	/17.E4
52	IN/OUT		
	PWR	EGR valve (CAN)	/27.D2
	OUT	Oil pressure switch	
40	IN	Oil pressure lamp	
7	OUT	Fuel pump	
20	OUT		
18	OUT	Case ground	

KRAMER
Kramer Werke GmbH
Wacker Neuson Straße 1 / D- 88630 Pfullendorf
Tel.: +49 (0) 7552 9288 -0
Fax: +49 (0) 7552 9288 -49

Diese Zeichnung darf ohne unsere ausdrückliche Genehmigung weder vervielfältigt, noch dritten Personen oder Mitbewerbern im Original oder als Kopie ausgehändigt werden. Eigentums- und Urheberrecht vorbehalten.

	date	name
User		Inzstuea1
Proved	20.06.2016	Inzkraum
Reading station		

ECU connector

Mat.-Nr. 1000364531 Doc.-Nr. 2060093317

Revision	03
Ersetzt Version	02
Gewicht in [kg]	

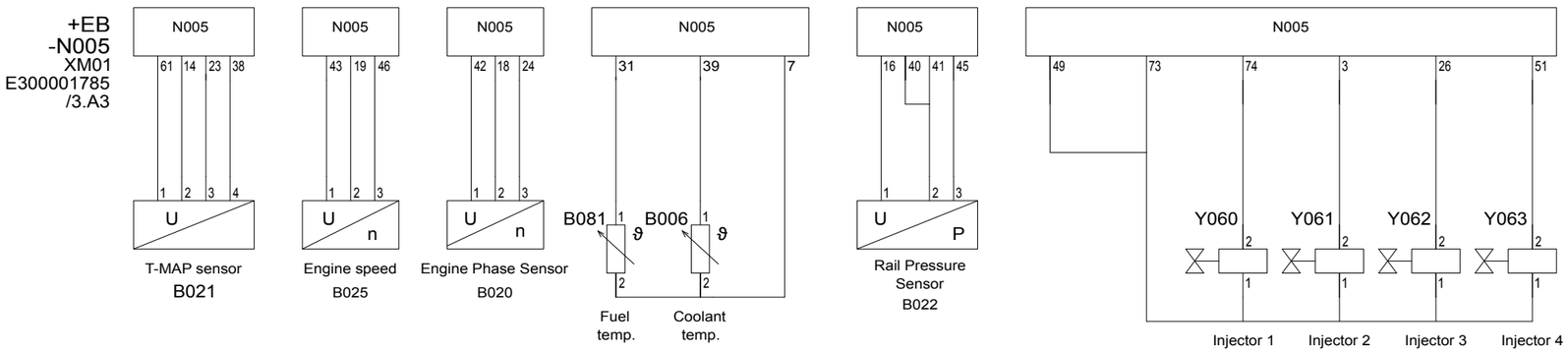

KRAMER
Kramer Werke GmbH
Wacker Neuson Straße 1 / D- 88630 Pfullendorf
Tel.: +49 (0) 7552 9288 -0
Fax: +49 (0) 7552 9288 -49

Diese Zeichnung darf ohne unsere ausdrückliche Genehmigung weder vervielfältigt, noch dritten Personen oder Mitbewerbern im Original oder als Kopie ausgehändigt werden. Eigentums- und Urheberrecht vorbehalten.

	date	name
User		
Proved	20.06.2016	Inzkraum
Reading station		

Diesel engine

Mat. -Nr. 1000364531

Doc. -Nr. 2060093317

Revision	03
Ersetzt Version	02
Gewicht in [kg]	

A3

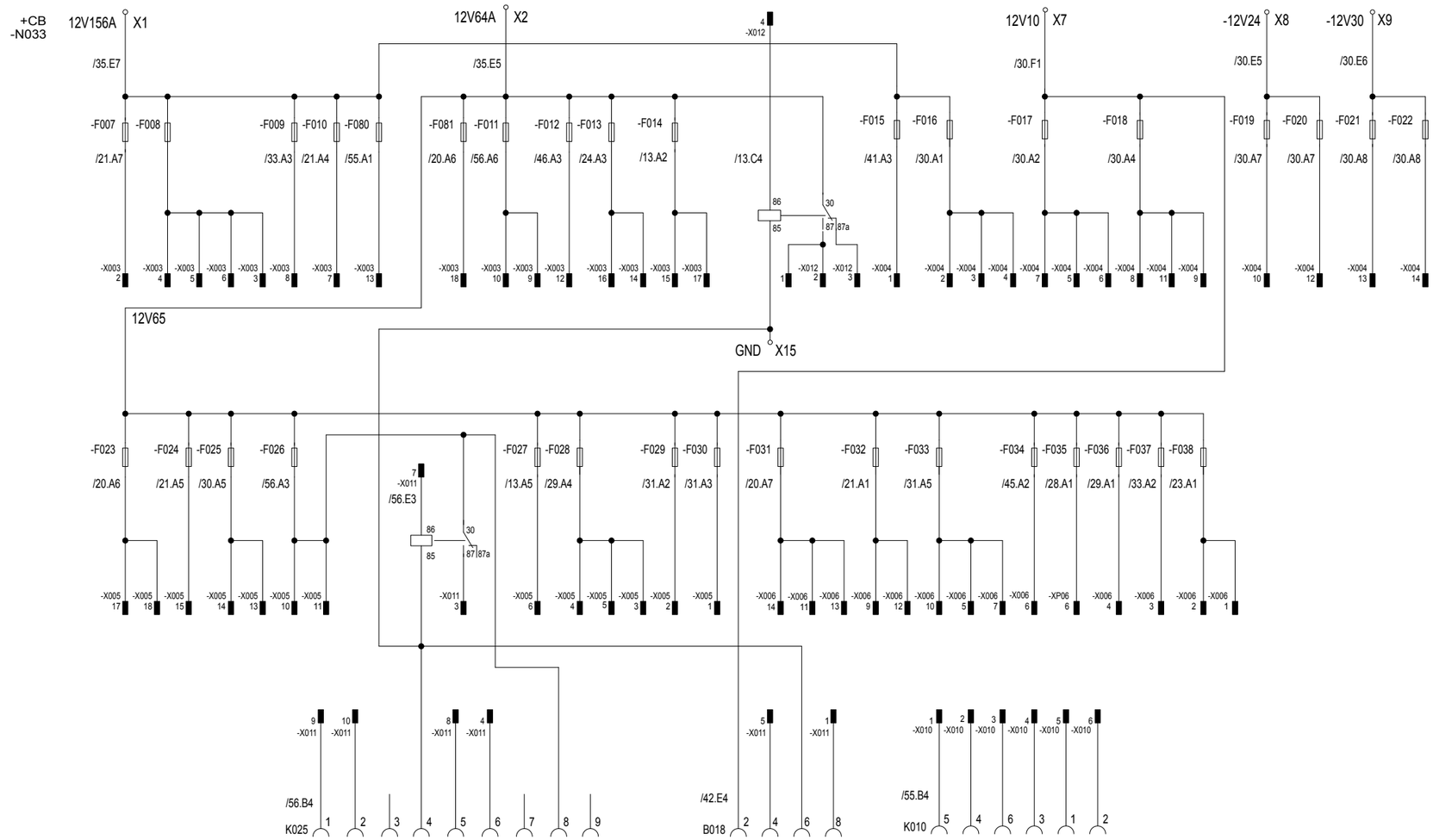

KRAMER
Kramer Werke GmbH
Wacker Neuson Straße 1 / D- 88630 Pfullendorf
Tel.: +49 (0) 7552 9288 -0
Fax: +49 (0) 7552 9288 -49

Diese Zeichnung darf ohne unsere ausdrückliche Genehmigung weder vervielfältigt, noch dritten Personen oder Mitbewerbern im Original oder als Kopie ausgehändigt werden. Eigentums- und Urheberrecht vorbehalten.

	date	name
User		Inzschwn
Proved	20.06.2016	Inzkraum
Reading station		

main fuses circuit board

Mat.-Nr. 1000364531

Doc.-Nr. 2060093317

Revision	03
Ersetzt Version	02
Gewicht in [kg]	

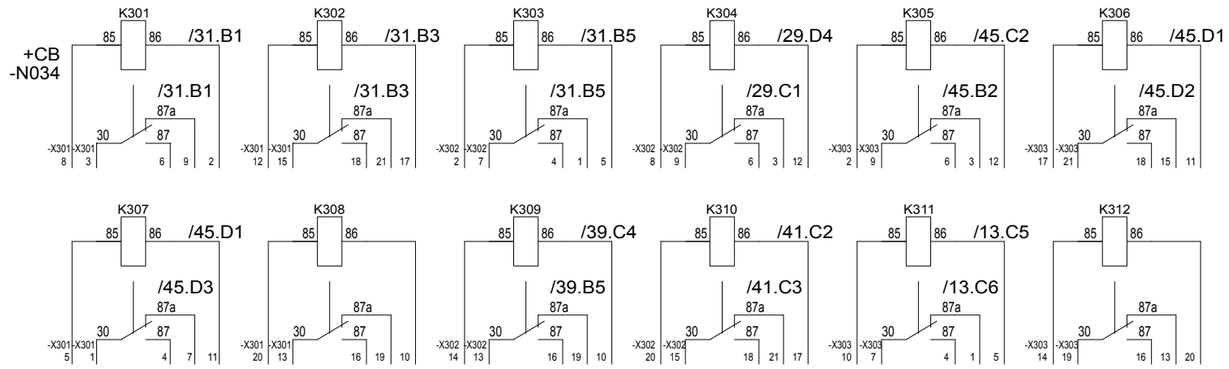

KRAMER
Kramer Werke GmbH
Wacker Neuson Straße 1 / D- 88630 Pfullendorf
Tel.: +49 (0) 7552 9288 -0
Fax: +49 (0) 7552 9288 -49

Diese Zeichnung darf ohne unsere ausdrückliche Genehmigung weder vervielfältigt, noch dritten Personen oder Mitbewerbern im Original oder als Kopie ausgehändigt werden. Eigentums- und Urheberrecht vorbehalten.

	date	name
User		Inzschwn
Proved	20.06.2016	Inzkraum
Reading station		

relay circuit board

Mat.-Nr. 1000364531

Doc.-Nr. 2060093317

Revision	03
Ersetzt Version	02
Gewicht in [kg]	

A3

+CB
-N004

HY-TTC 580

PIN	DESCRIPTION	SIGNAL	Ref-PAGE	NOTE
101	n.c.	DIN		
102	n.c.	DIN		
103	DPF	RIN		
104	Seat contact CH1	RIN	/23.F3	
105	Angl snsr lift arm Sig. 1	AIN	/50.F3	
106	Angl snsr tilt cyli. Sig.2	AIN	/50.F8	
107	3 point lift rear button	AIN	/52.E5	
108	Temp.switch Klima.	AIN	/28.F3	
109	AutoHitch unlocked	DIN	/53.F2	
110	Acclrtn pedal Signal 1	AIN	/26.F2	
111	Loadpress. snsr 3point	AIN	/52.E4	
112	PTO rear button	AIN	/36.F3	
113	Joystick 3point Sig. 1	AIN	/52.E7	
114	Hand throttle Signal 2	AIN	/26.F7	
115	Belt contact	AIN	/23.F5	
116	Hydr.deactivation active	DIN	/50.E2	
117	Quick change not acttd	DIN	/50.E1	
118	BAT-	BAT-	/20.E4	
119	BAT-	BAT-		
120	BAT-	BAT-		
121	BAT-	BAT-		
122	100% Load signal	DIN	/34.E3	
123	Parking Brake	DIN	/13.F2	
124	refeed K101	DIN	/45.F2	
125	n.c.	DIN		
126	n.c.	DIN		
127	Hydr. oil temperature	Temp	/24.F6	
128	µswtch stearing level	RIN	/47.F4	
129	Angl. snsr lift arm Sig.2	AIN	/50.F3	
130	Angl. snsr tilt cyli. Sig.1	AIN	/50.F8	
131	3point lower rear button	AIN	/52.E6	
132	refeed K102	AIN	/45.F3	
133	AutoHitch locked	DIN	/53.F2	
134	Acclrtn pedal Signal 2	AIN	/26.F3	
135	n.c.	AIN		
136	Load stabiliser on	AIN	/40.F1	
137	Joystick 3point sig. 2	AIN	/52.E7	
138	Hand throttle signal 1	AIN	/26.F6	
139	Seat contact CH2	AIN	/23.F4	
140	Hydr.deactivation inactive	DIN	/50.E2	
141	Quick change acttd	DIN	/50.E1	
142	BAT-	BAT-	/20.E5	
143	BAT-	BAT-		
144	BAT-	BAT-		
145	BAT-	BAT-		
146	Contact switch diff lock	DIN		
147	Parking Brake	DIN	/13.F2	
148	coolant level snsr	DIN	/24.B2	
149	Working light front	DOUT	/31.A1	
150	Speed snsr H1 sig1	DIN	/49.E4	
151	n.c.	FreqIN		
152	Working light tele arm	DOUT	/31.A4	
153	n.c.	DOUT		
154	Quick change release	PWM	/37.A1	
155	Front socket 7pol K101	DOUT / AIN	/45.A1	
156	Ride control	PWM	/40.A5	
157	Fan	PWM	/24.B2	
158	Front socket 7pol K016	DOUT / AIN	/45.A1	
159	switch valve rear aux	DOUT	/53.A6	
160	Hydr. trailer brake	PWM	/54.A2	
161	n.c.	DOUT		
162	3point floating tilt	PWM	/52.A2	
163	Reverse fan	DOUT	/24.B1	
164	n.c.	DOUT		
165	Retract telescopic arm	PWM CFB	/51.A3	
166	Release AutoHitch	DOUT	/53.A6	
167	n.c.	DOUT		

PIN	DESCRIPTION	SIGNAL	Ref-PAGE	NOTE
168	Lower tele arm	PWM CFB	/51.A4	
169	PCOR-valve	DOUT		
170	n.c.	DOUT		
171	Tilt forward (Dump)	PWM CFB	/51.A5	
172	3point valve lower	PWM	/52.A2	
173	Working light rear	DOUT	/31.A2	
174	n.c.	DIN		
175	n.c.	FreqIN		
176	Beacon	DOUT	/41.B2	
177	Ride control	PWM	/40.A3	
178	Quick change release	PWM	/37.A1	
179	Front socket 7pol sig2	DOUT / AIN	/45.A1	
180	n.c.	PWM		
181	Dumper tilt unlock	DOUT	/53.A7	
182	Differential lock	DOUT	/43.A4	
183	rear aux. lift	PWM	/53.A4	
184	Quick change release	DOUT	/37.A2	
185	n.c.	DOUT		
186	rear aux. lower	PWM	/53.A5	
187	n.c.	DOUT		
188	Relay driving signals	DOUT		
189	Extend telescopic arm	PWM CFB	/51.A3	
190	Switch valve front aux	DOUT	/37.A2	
191	n.c.	DOUT		
192	Tele lift	PWM CFB	/51.A4	
193	PTO valve	PWM	/36.A4	
194	n.c.	DOUT		
195	Tilt back (Roll In)	PWM CFB	/51.A4	
196	3point valve lift	PWM	/52.A2	

PIN	DESCRIPTION	SIGNAL	Ref-PAGE	NOTE
201	BAT+	BAT+	/20.E4	
202	BAT+	BAT+		
203	BAT+	BAT+		
204	BAT+	BAT+		
205	BAT+	BAT+		
206	BAT+	BAT+		
207	P/O steady no wakeup	K15	/20.D5	
208	n.c.	LIN		
209	CAN0 -	CAN 0, Low	/15.A1	
210	CAN1 -	CAN 1, Low	/16.C1	
211	CAN2 -	CAN 2, Low		
212	n.c.	CAN 3, Low		
213	n.c.	CAN 4, Low		
214	n.c.	CAN 5, Low		
215	n.c.	CAN 6, Low		
216	n.c.	CAN 2 +		
217	Sensor GND 1	Sensor -	/50.F7	
218	n.c.	TD+		
219	n.c.	TD-		
220	WAKE_UP	WAKE_UP		
221	5...10V Sensor power	5V Sensor PWR	/50.A1	
222	CAN0 +	CAN 0, High	/15.A1	
223	CAN1 +	CAN 1, High	/16.C1	
224	CAN2 +	CAN 2, High		
225	n.c.	CAN 3, High		
226	n.c.	CAN 4, Low		
227	n.c.	CAN 5, Low		
228	n.c.	CAN 6, Low		
229	n.c.	CAN 2 -		
230	Sensor GND 2	Sensor -	/50.F6	
231	n.c.	RD+		
232	n.c.	RD-		
233	n.c.	RTC		
234	5V Sensor +	5V Sensor +	/50.A3	
235	resistor CAN0 -	CAN0 -	/15.E1	
236	resistor CAN1 -	CAN1 -	/16.E1	
237	resistor CAN2 -	CAN2 -		
238	Tele arm extndd clsd	DIN	/50.F6	
239	n.c.	DIN		
240	n.c.	DIN		
241	n.c.	DIN		
242	n.c.	RS232		
243	Sensor GND	Sensor ground	/24.F6	
244	Sensor GND	SGND	/23.F2	
245	Sensor GND	SGND	/26.F2	
246	BAT + (CPU)	BAT + (CPU)	/20.E2	
247	5V Sensor +	5V Sensor +	/50.A3	
248	resistor CAN0 +	CAN0 +	/15.E1	
249	resistor CAN1 +	CAN1 +	/16.E1	
250	resistor CAN2 +	CAN2 +		
251	Tele arm extndd brk cont	DIN	/50.F6	
252	Oiltemp. swtch coolant	DIN		
253	n.c.	DIN		
254	n.c.	DIN		
255	n.c.	RS232		
256	SGND	SGND	/26.F3	
257	SGND	SGND	/26.F4	
258	SGND	SGND	/26.F4	

KRAMER
Kramer Werke GmbH
Wacker Neuson Straße 1 / D- 88630 Pfullendorf
Tel.: +49 (0) 7552 9288 -0
Fax: +49 (0) 7552 9288 -49

Diese Zeichnung darf ohne unsere ausdrückliche Genehmigung weder vervielfältigt, noch dritten Personen oder Mitbewerbern im Original oder als Kopie ausgehändigt werden. Eigentums- und Urheberrecht vorbehalten.

	date	name
User		Inzstuea1
Proved	20.06.2016	Inzkraum
Reading station		

MVCU TTC580

Mat.-Nr. 1000364531 Doc.-Nr. 2060093317

Revision	03
Ersetzt Version	02
Gewicht in [kg]	

A3

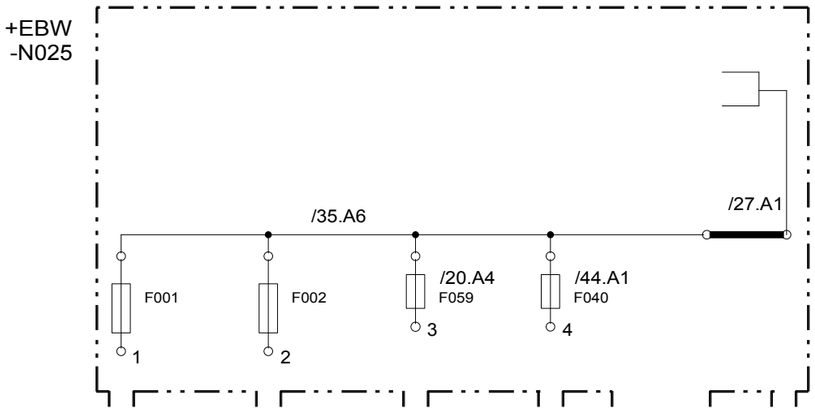

KRAMER
Kramer Werke GmbH
Wacker Neuson Straße 1 / D- 88630 Pfullendorf
Tel.: +49 (0) 7552 9288 -0
Fax: +49 (0) 7552 9288 -49

Diese Zeichnung darf ohne unsere ausdrückliche Genehmigung weder vervielfältigt, noch dritten Personen oder Mitbewerbern im Original oder als Kopie ausgehändigt werden. Eigentums- und Urheberrecht vorbehalten.

	date	name
User		Inzschwn
Proved	20.06.2016	Inzkraum
Reading station		

Main distribution

Mat. -Nr. 1000364531

Doc. -Nr. 2060093317

Revision	03
Ersetzt Version	02
Gewicht in [kg]	

+EB -N001		Steuerung H1 Pumpe		
PIN	CON.	SIGNAL	DESCRIPTION	Ref-PAGE
1	CC1	PWR	Battery -	/20.D1
2	CC1		Battery +	
3	CC1		Sensor +	/49.C6
4	CC1		Sensor -	/49.D6
8	CC1		Sensor +	/49.A3
9	CC1		Sensor -	/49.E3
5	CC1	IN	Mtr RPM In (Frequency)	/49.E5
6	CC1	IN	Frwrd In (Digital)	
7	CC1	IN	Rvrs In (Digital)	
10	CC1	IN	Drv Pdl In (Analog-Norm)	/49.D6
11	CC1	IN		
12	CC1	IN	Ntrl In (Digital)	
11	CC2	IN	Md Swtch A In (Digital)	
2	CC2	IN	Md Swtch B In (Digital-Norm)	
12	CC2	IN		
7	CC2	IN	Inch In (Analog-Norm)	/49.B6
1	CC2	IN		
4	CC2	IN	Mtr Drctn In (Analog)	/49.E4
3	CC2	OUT	PROP/PCOR Out (PWM)	/49.A2
8	CC2	OUT	Mtr BPD Out (Digital)	/49.A2
9	CC2	OUT	Dgtl Out B2 -	/13.E5
10	CC2	OUT	Dgtl Out B1 +	
5	CC2		Sensor +	/49.A6
6	CC2		Sensor -	/49.B6

+EB -N001		Steuerung H1 Pumpe		
PIN	CON.	SIGNAL	DESCRIPTION	Ref-PAGE
1	CAN		High	/17.E2
2	CAN		Low	
3	CAN		Shield	
1	PPC			
2	PPC	IN		
3	PPC			
4	PPC			
5	PPC	IN		
6	PPC			
1	PPU		Sensor +	
2	PPU	IN	Pmp RPM In (Frequency)	/49.A1
3	PPU		Sensor -	
1	PSC		PWM C1 +	/49.C1
6	PSC		PWM C1 -	
2	PSC		PWM C2 +	/49.E1
5	PSC		PWM C2 -	
3	PSC	OUT	Digital Output A1 +	/39.A4
4	PSC	OUT	Digital Output A2 -	
1	CC3			
2	CC3			

KRAMER
Kramer Werke GmbH
Wacker Neuson Straße 1 / D- 88630 Pfullendorf
Tel.: +49 (0) 7552 9288 -0
Fax: +49 (0) 7552 9288 -49

Diese Zeichnung darf ohne unsere ausdrückliche Genehmigung weder vervielfältigt, noch dritten Personen oder Mitbewerbern im Original oder als Kopie ausgehändigt werden. Eigentums- und Urheberrecht vorbehalten.

	date	name
User		Inzschwn
Proved	20.06.2016	Inzkraum
Reading station		

Travelling drive

Mat.-Nr. 1000364531 Doc.-Nr. 2060093317

Revision	03
Ersetzt Version	02
Gewicht in [kg]	

+CB -N031		Camera Switch Box M9100167	
PIN		DESCRIPTION	Ref-PAGE
1 2 3 4		Switch Box	/14.C4
BK		PWR	
BN		GND	/21.D5
GNYE		Trigger 1	
GY		Trigger 2	/39.C6
BU		Trigger 3	

KRAMER
Kramer Werke GmbH
Wacker Neuson Straße 1 / D- 88630 Pfullendorf
Tel.: +49 (0) 7552 9288 -0
Fax: +49 (0) 7552 9288 -49

Diese Zeichnung darf ohne unsere ausdrückliche Genehmigung weder vervielfältigt, noch dritten Personen oder Mitbewerbern im Original oder als Kopie ausgehändigt werden. Eigentums- und Urheberrecht vorbehalten.

	date	name
User		lnzschwn
Proved	20.06.2016	lnzkraum
Reading station		

Camera

Mat.-Nr. 1000364531 Doc.-Nr. 2060093317

Revision	03
Ersetzt Version	02
Gewicht in [kg]	

A3

+CB -P006		Lastanzeige OMD II	
PIN	SIGNAL	DESCRIPTION	Ref-PAGE
1		PWR +	/34.C4
2		GND	
3	-VE	Cutoff output S1	/34.A3
4	-VE	Sensor 1	/34.E2
5	+VE	Sensor 2	/34.A1
6		Sensor	/34.E2
7		CAN H	/16.C2
8		CAN L	

KRAMER
Kramer Werke GmbH
Wacker Neuson Straße 1 / D- 88630 Pfullendorf
Tel.: +49 (0) 7552 9288 -0
Fax: +49 (0) 7552 9288 -49

Diese Zeichnung darf ohne unsere ausdrückliche Genehmigung weder vervielfältigt, noch dritten Personen oder Mitbewerbern im Original oder als Kopie ausgehändigt werden. Eigentums- und Urheberrecht vorbehalten.

	date	name
User		lnzkraum
Proved	20.06.2016	lnzkraum
Reading station		

Safe load indicator OMD II

Mat. -Nr. 1000364531 Doc. -Nr. 2060093317

Revision	03
Ersetzt Version	02
Gewicht in [kg]	

A3

+CB -N021	Steuergerät Wegfahrsperre		
PIN	SIGNAL	DESCRIPTION	
1	KEY_7	KEY	
2	KEY_6		
3	KEY_5		
4	KEY_4		
5	KEY_3		
6	KEY_2		
7	KEY_1		
8	KEY_0		
9	LED_L	LED DRV	
10	LED_H		
11	ANT_1	Antenna	
12	ANT_2		
1	K3_COM	K3	/27.C6
2	K3_NO		
3	K2_COM	K2	/20.C7
4	K2_NO		
5	K1_NO	K1	
6	K1_NC		
12	K1_COM		
8	15/54	15/54 Ignition Key	/21.D6
9	CAN_H	CAN-Bus	/15.A5
10	CAN_L		
7	+Batt.In	Power	/21.D6
11	GND		

KRAMER
Kramer Werke GmbH
Wacker Neuson Straße 1 / D- 88630 Pfullendorf
Tel.: +49 (0) 7552 9288 -0
Fax: +49 (0) 7552 9288 -49

Diese Zeichnung darf ohne unsere ausdrückliche Genehmigung weder vervielfältigt, noch dritten Personen oder Mitbewerbern im Original oder als Kopie ausgehändigt werden. Eigentums- und Urheberrecht vorbehalten.

	date	name
User		lnzkraum
Proved	20.06.2016	lnzkraum
Reading station		

Immobiliser

Mat.-Nr. 1000364531 Doc.-Nr. 2060093317

Revision	03
Ersetzt Version	02
Gewicht in [kg]	

A3

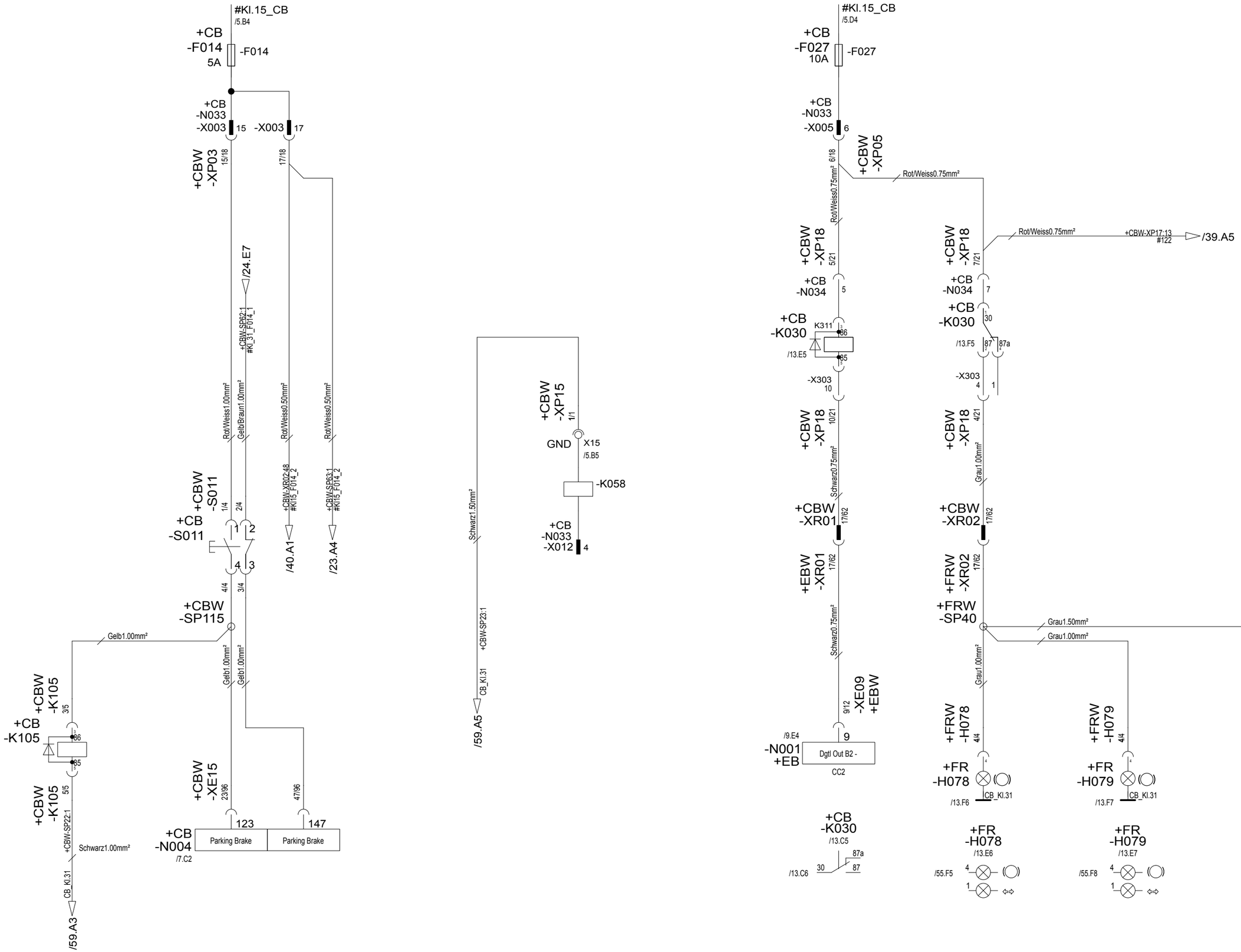

KRAMER
Kramer Werke GmbH
Wacker Neuson Straße 1 / D- 88630 Pfullendorf
Tel.: +49 (0) 7552 9288 -0
Fax: +49 (0) 7552 9288 -49

Diese Zeichnung darf ohne unsere ausdrückliche Genehmigung weder vervielfältigt, noch dritten Personen oder Mitbewerbern im Original oder als Kopie ausgehändigt werden. Eigentums- und Urheberrecht vorbehalten.

	date	name
User		Inzschwn
Proved	20.06.2016	Inzkraum
Reading station		

brake and Brake lights

Mat.-Nr. 1000364531
Doc.-Nr. 2060093317

Revision	03
Ersetzt Version	02
Gewicht in [kg]	

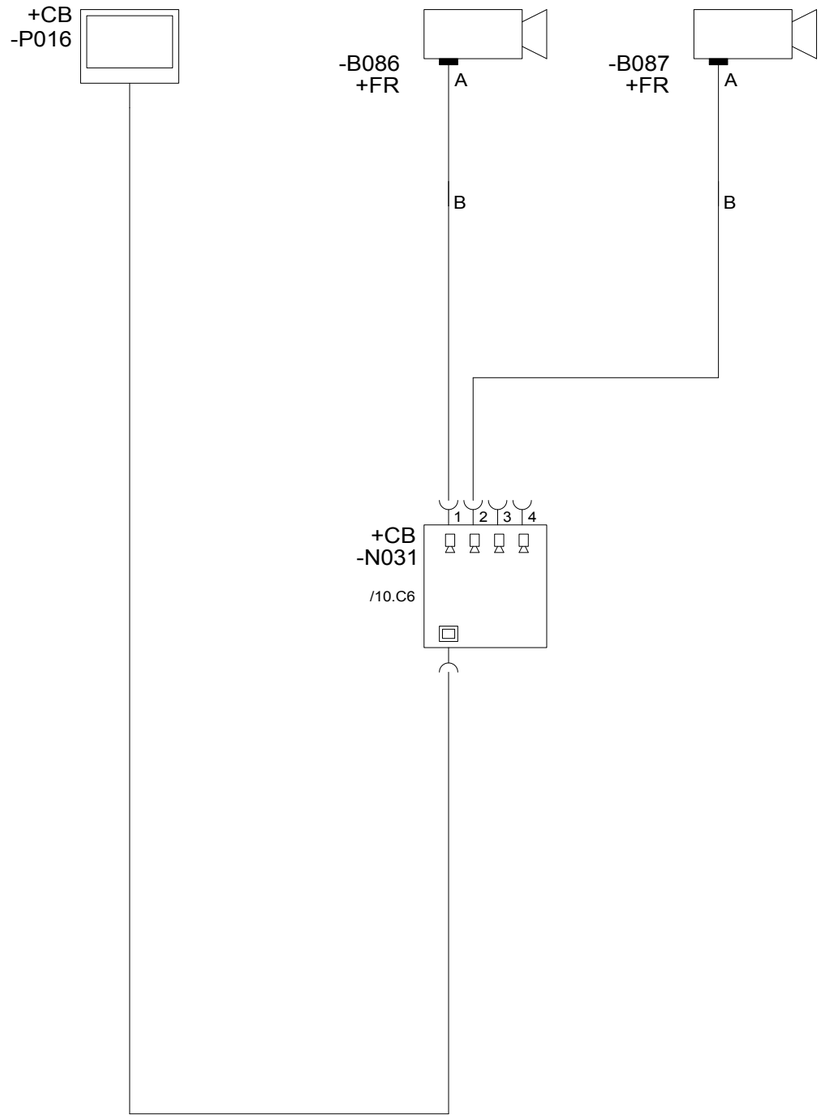

KRAMER
Kramer Werke GmbH
Wacker Neuson Straße 1 / D- 88630 Pfullendorf
Tel.: +49 (0) 7552 9288 -0
Fax: +49 (0) 7552 9288 -49

Diese Zeichnung darf ohne unsere ausdrückliche Genehmigung weder vervielfältigt, noch dritten Personen oder Mitbewerbern im Original oder als Kopie ausgehändigt werden. Eigentums- und Urheberrecht vorbehalten.

	date	name
User		Inzschwn
Proved	20.06.2016	Inzkraum
Reading station		

Camera

Mat. -Nr. 1000364531

Doc. -Nr. 2060093317

Revision	03
Ersetzt Version	02
Gewicht in [kg]	

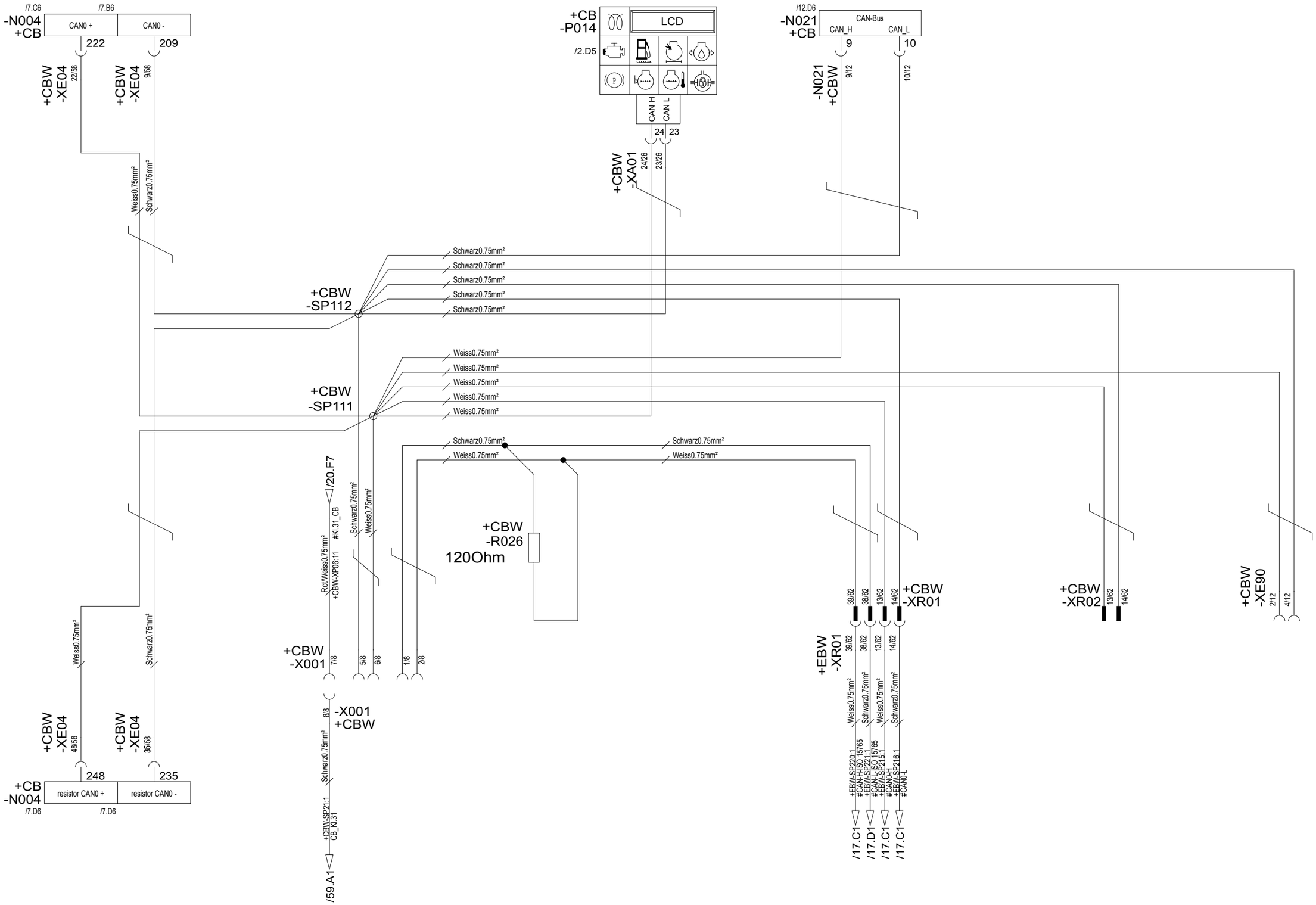

KRAMER
Kramer Werke GmbH
Wacker Neuson Straße 1 / D- 88630 Pfullendorf
Tel.: +49 (0) 7552 9288 -0
Fax: +49 (0) 7552 9288 -49

Diese Zeichnung darf ohne unsere ausdrückliche Genehmigung weder vervielfältigt, noch dritten Personen oder Mitbewerbern im Original oder als Kopie ausgehändigt werden. Eigentums- und Urheberrecht vorbehalten.

	date	name
User		Inzschwn
Proved	20.06.2016	Inzkraum
Reading station		

CAN0 and diagnostics Cabin

Mat.-Nr. 1000364531 Doc.-Nr. 2060093317

Revision	03
Ersetzt Version	02
Gewicht in [kg]	

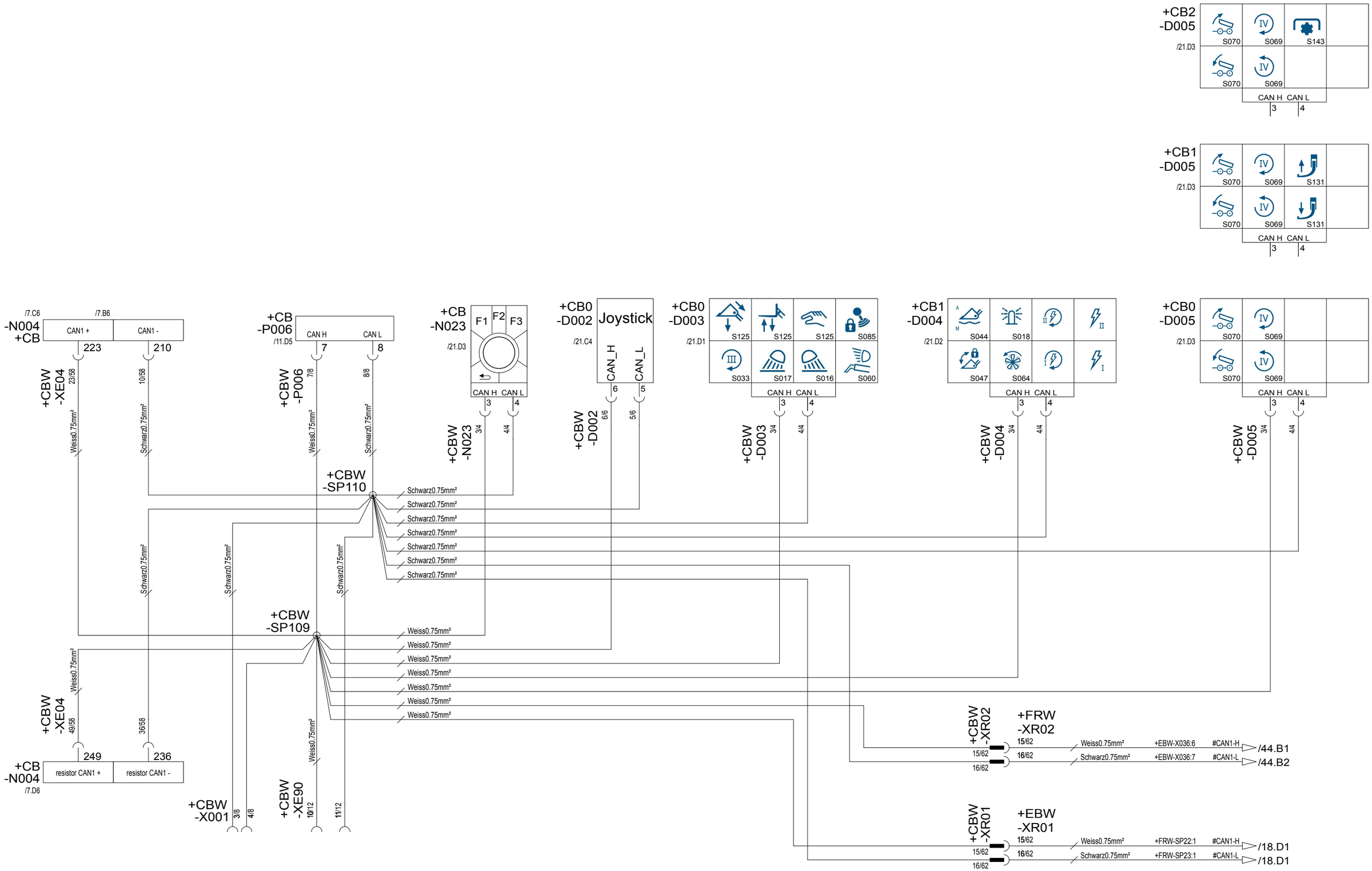

KRAMER
Kramer Werke GmbH
Wacker Neuson Straße 1 / D- 88630 Pfullendorf
Tel.: +49 (0) 7552 9288 -0
Fax: +49 (0) 7552 9288 -49

Diese Zeichnung darf ohne unsere ausdrückliche Genehmigung weder vervielfältigt, noch dritten Personen oder Mitbewerbern im Original oder als Kopie ausgehändigt werden. Eigentums- und Urheberrecht vorbehalten.

	date	name
User		Inzkraum
Proved	20.06.2016	Inzkraum
Reading station		

CAN1 and diagnostics Cabin

Mat. -Nr. 1000364531

Doc. -Nr. 2060093317

Revision	03
Ersetzt Version	02
Gewicht in [kg]	

A3

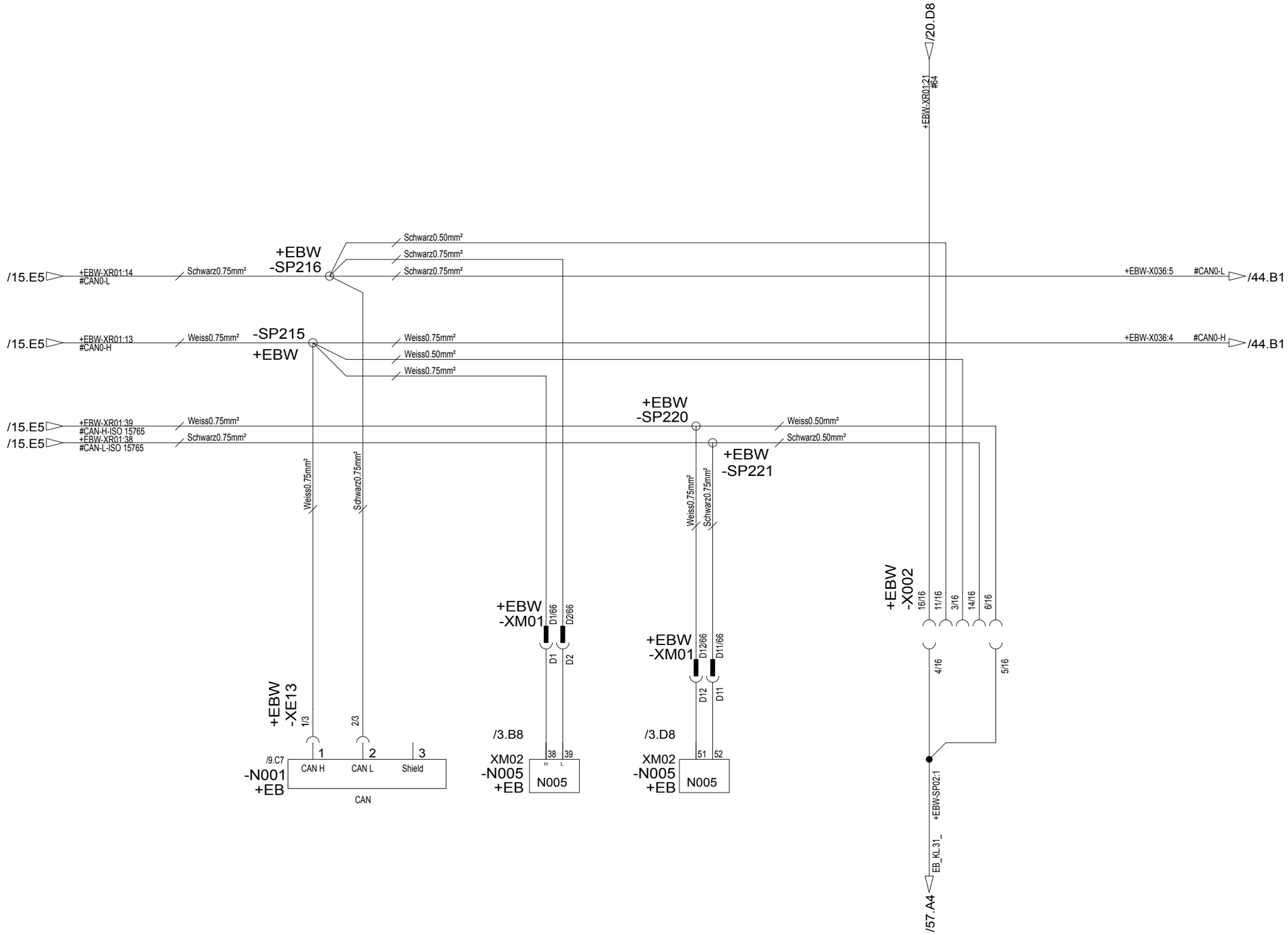

KRAMER
Kramer Werke GmbH
Wacker Neuson Straße 1 / D- 88630 Pfullendorf
Tel.: +49 (0) 7552 9288 -0
Fax: +49 (0) 7552 9288 -49

Diese Zeichnung darf ohne unsere ausdrückliche Genehmigung weder vervielfältigt, noch dritten Personen oder Mitbewerbern im Original oder als Kopie ausgehändigt werden. Eigentums- und Urheberrecht vorbehalten.

	date	name
User		Inzstuea1
Proved	20.06.2016	Inzkraum
Reading station		

CAN and diagnostics Motor

Mat.-Nr. 1000364531

Doc.-Nr. 2060093317

Revision	03
Ersetzt Version	02
Gewicht in [kg]	

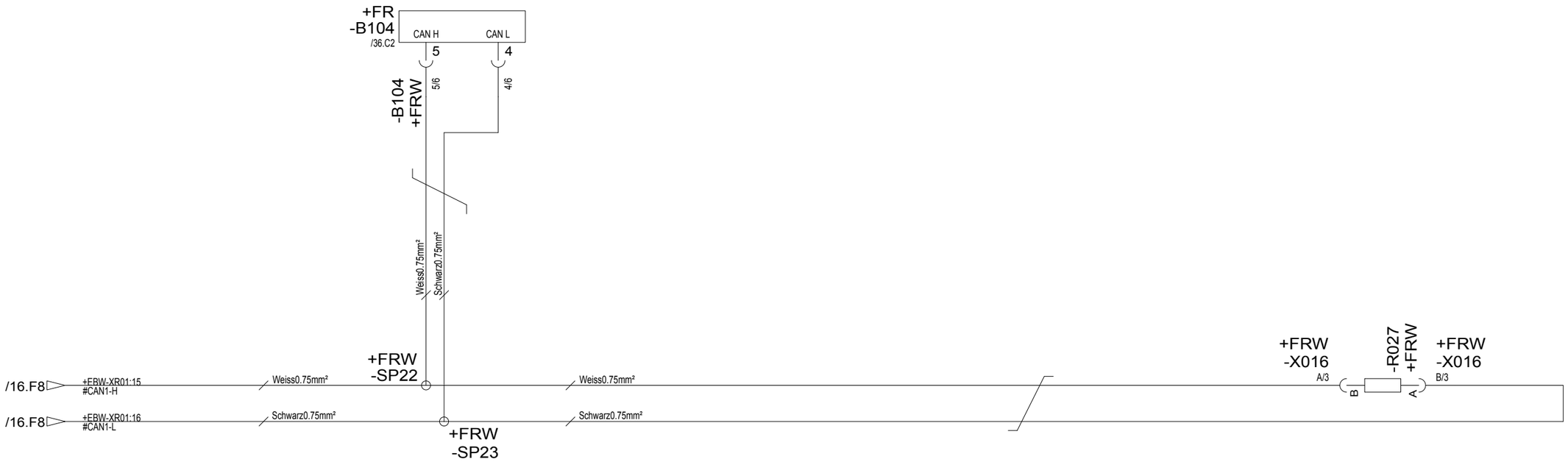

KRAMER
Kramer Werke GmbH
Wacker Neuson Straße 1 / D- 88630 Pfullendorf
Tel.: +49 (0) 7552 9288 -0
Fax: +49 (0) 7552 9288 -49

Diese Zeichnung darf ohne unsere ausdrückliche Genehmigung weder vervielfältigt, noch dritten Personen oder Mitbewerbern im Original oder als Kopie ausgehändigt werden. Eigentums- und Urheberrecht vorbehalten.

	date	name
User		Inzstuea1
Proved	20.06.2016	Inzkraum
Reading station		

CAN and diagnostics Chassis

Mat.-Nr. 1000364531 Doc.-Nr. 2060093317

Revision	03
Ersetzt Version	02
Gewicht in [kg]	

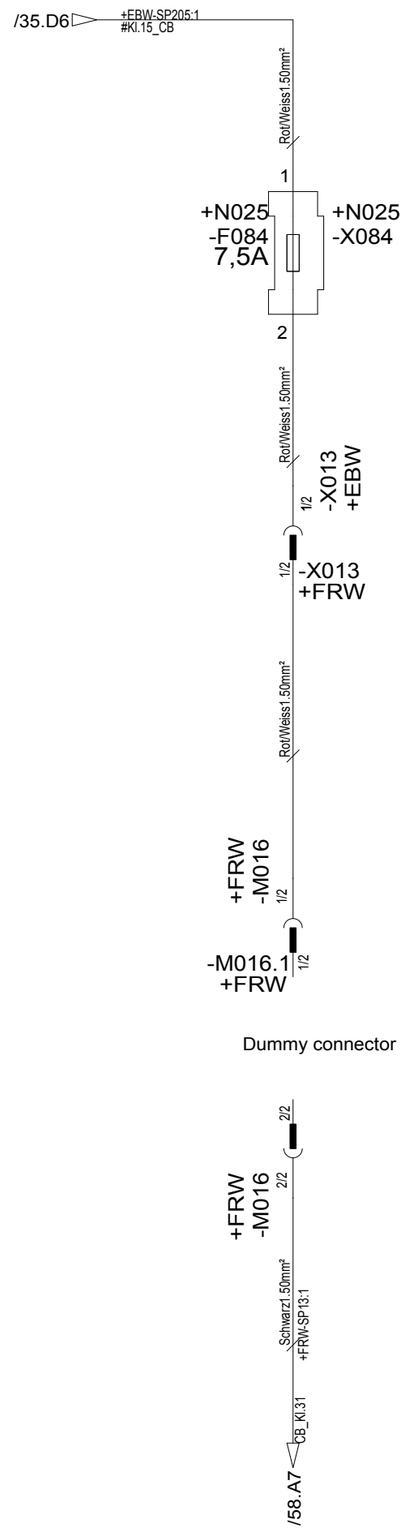

KRAMER
Kramer Werke GmbH
Wacker Neuson Straße 1 / D- 88630 Pfullendorf
Tel.: +49 (0) 7552 9288 -0
Fax: +49 (0) 7552 9288 -49

Diese Zeichnung darf ohne unsere ausdrückliche Genehmigung weder vervielfältigt, noch dritten Personen oder Mitbewerbern im Original oder als Kopie ausgehändigt werden. Eigentums- und Urheberrecht vorbehalten.

	date	name
User		Inzstuea1
Proved	20.06.2016	Inzkraum
Reading station		

Central lubrication system

Mat. -Nr. 1000364531

Doc. -Nr. 2060093317

Revision	03
Ersetzt Version	02
Gewicht in [kg]	

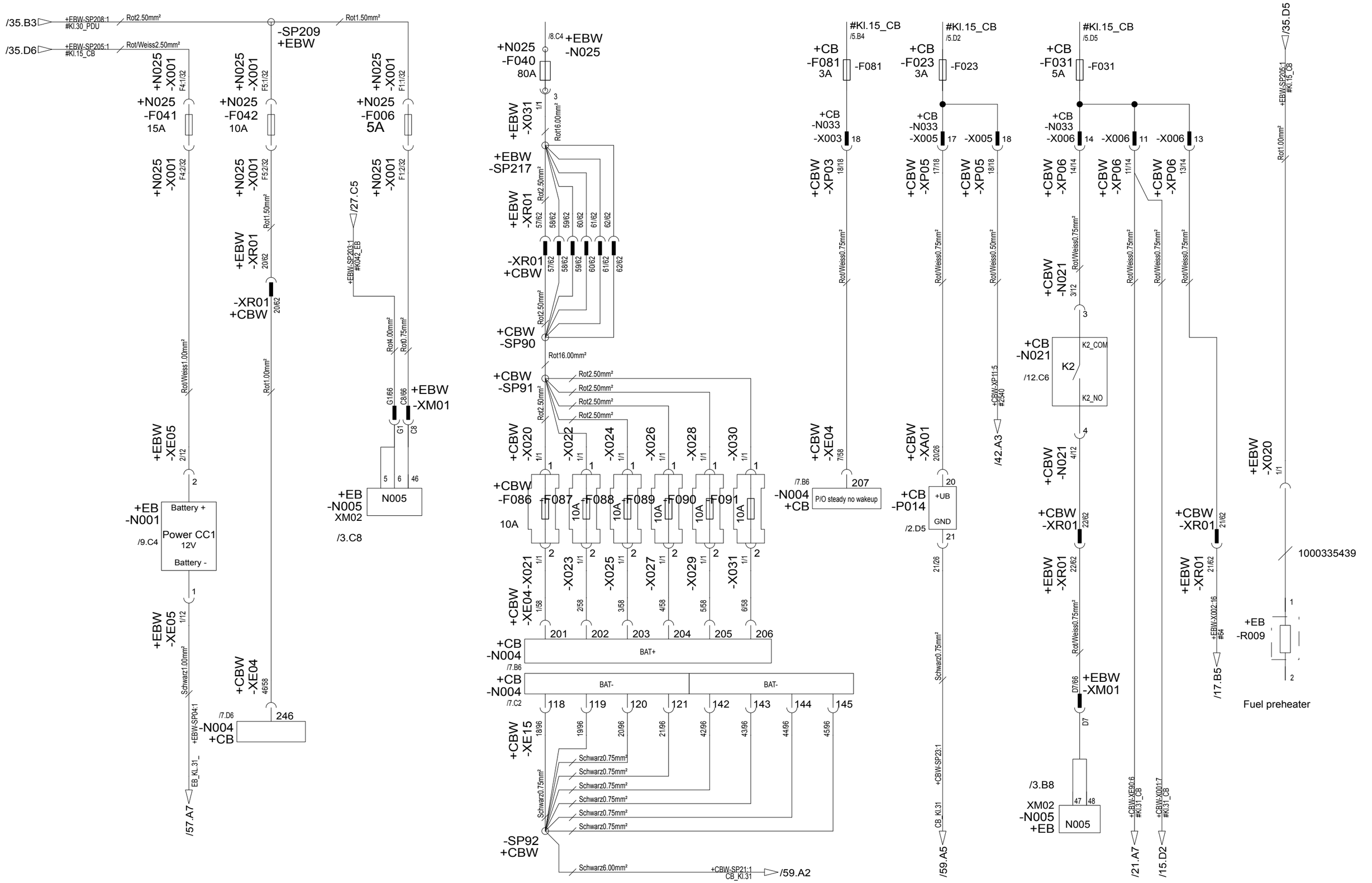

KRAMER
Kramer Werke GmbH
Wacker Neuson Straße 1 / D- 88630 Pfullendorf
Tel.: +49 (0) 7552 9288 -0
Fax: +49 (0) 7552 9288 -49

Diese Zeichnung darf ohne unsere ausdrückliche Genehmigung weder vervielfältigt, noch dritten Personen oder Mitbewerbern im Original oder als Kopie ausgehändigt werden. Eigentums- und Urheberrecht vorbehalten.

	date	name
User		Inzschwn
Proved	20.06.2016	Inzkraum
Reading station		

Supply Control valve

Mat. -Nr. 1000364531

Doc. -Nr. 2060093317

Revision	03
Ersetzt Version	02
Gewicht in [kg]	

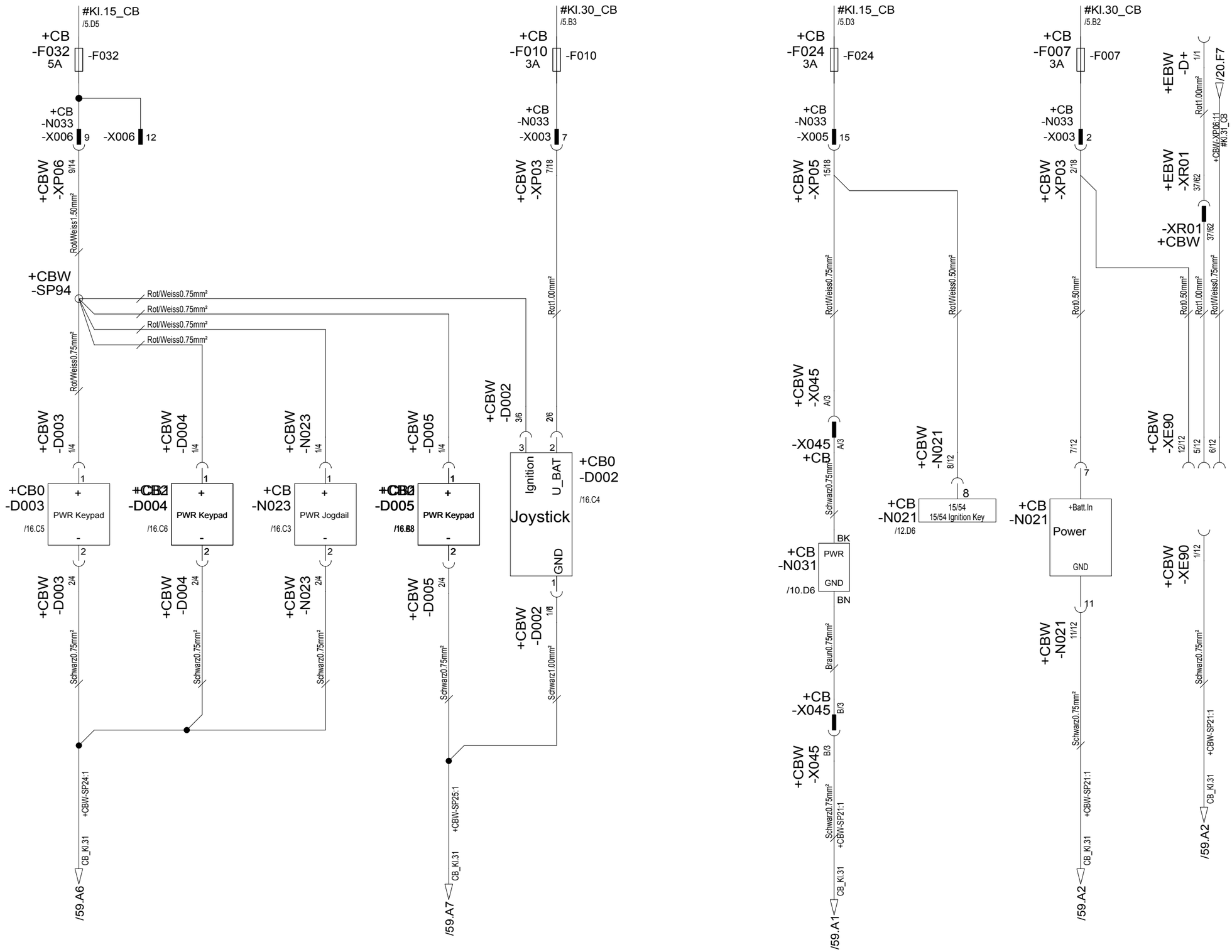

KRAMER
Kramer Werke GmbH
Wacker Neuson Straße 1 / D- 88630 Pfullendorf
Tel.: +49 (0) 7552 9288 -0
Fax: +49 (0) 7552 9288 -49

Diese Zeichnung darf ohne unsere ausdrückliche Genehmigung weder vervielfältigt, noch dritten Personen oder Mitbewerbern im Original oder als Kopie ausgehändigt werden. Eigentums- und Urheberrecht vorbehalten.

	date	name
User		Inzstuea1
Proved	20.06.2016	Inzkraum
Reading station		

Supply Control valve

Mat.-Nr. 1000364531 Doc.-Nr. 2060093317

Revision	03
Ersetzt Version	02
Gewicht in [kg]	

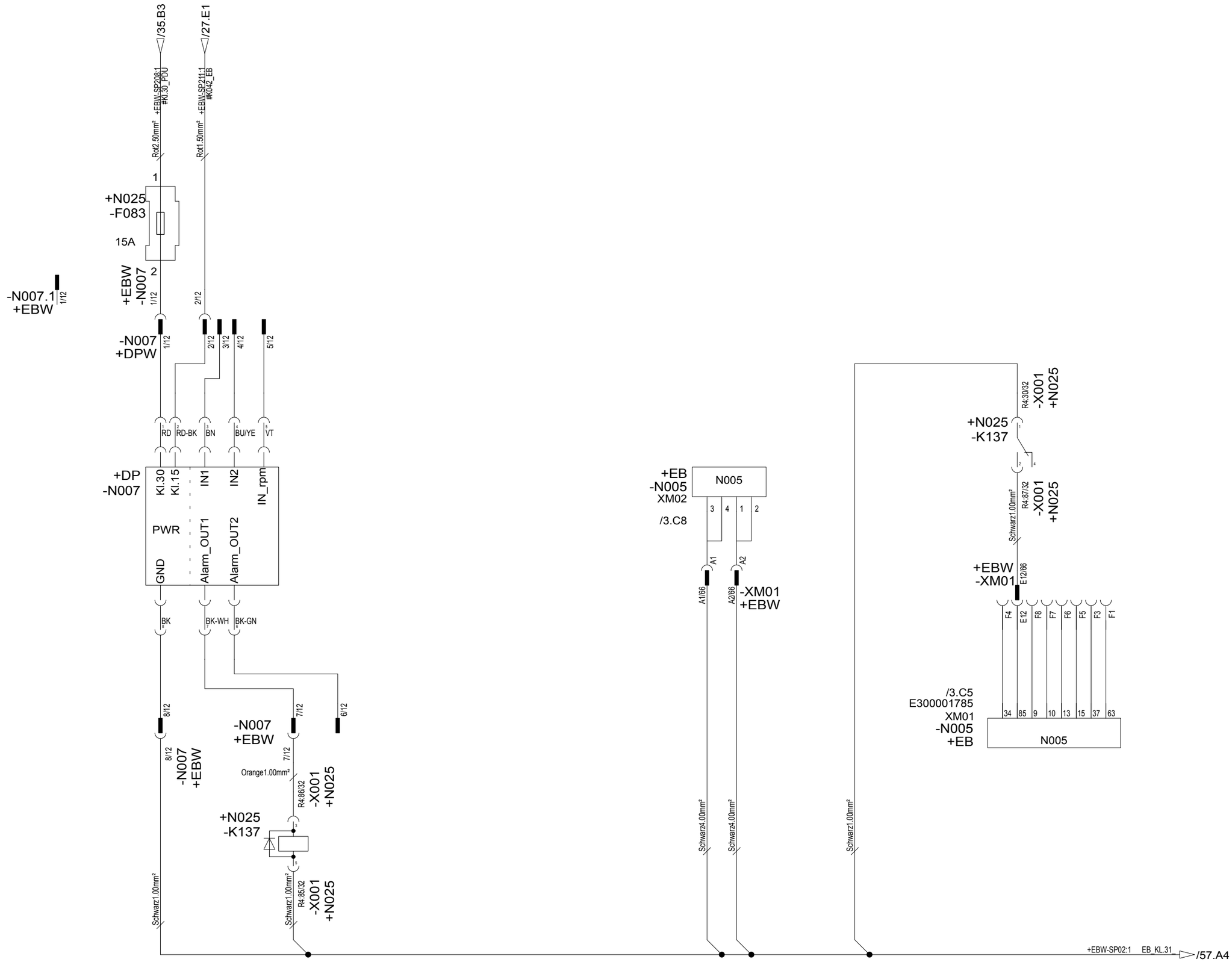

KRAMER
Kramer Werke GmbH
Wacker Neuson Straße 1 / D- 88630 Pfullendorf
Tel.: +49 (0) 7552 9288 -0
Fax: +49 (0) 7552 9288 -49

Diese Zeichnung darf ohne unsere ausdrückliche Genehmigung weder vervielfältigt, noch dritten Personen oder Mitbewerbern im Original oder als Kopie ausgehändigt werden. Eigentums- und Urheberrecht vorbehalten.

	date	name
User		lnzkraum
Proved	20.06.2016	lnzkraum
Reading station		

Diesel particulate filter external

Mat.-Nr. 1000364531 Doc.-Nr. 2060093317

Revision	03
Ersetzt Version	02
Gewicht in [kg]	

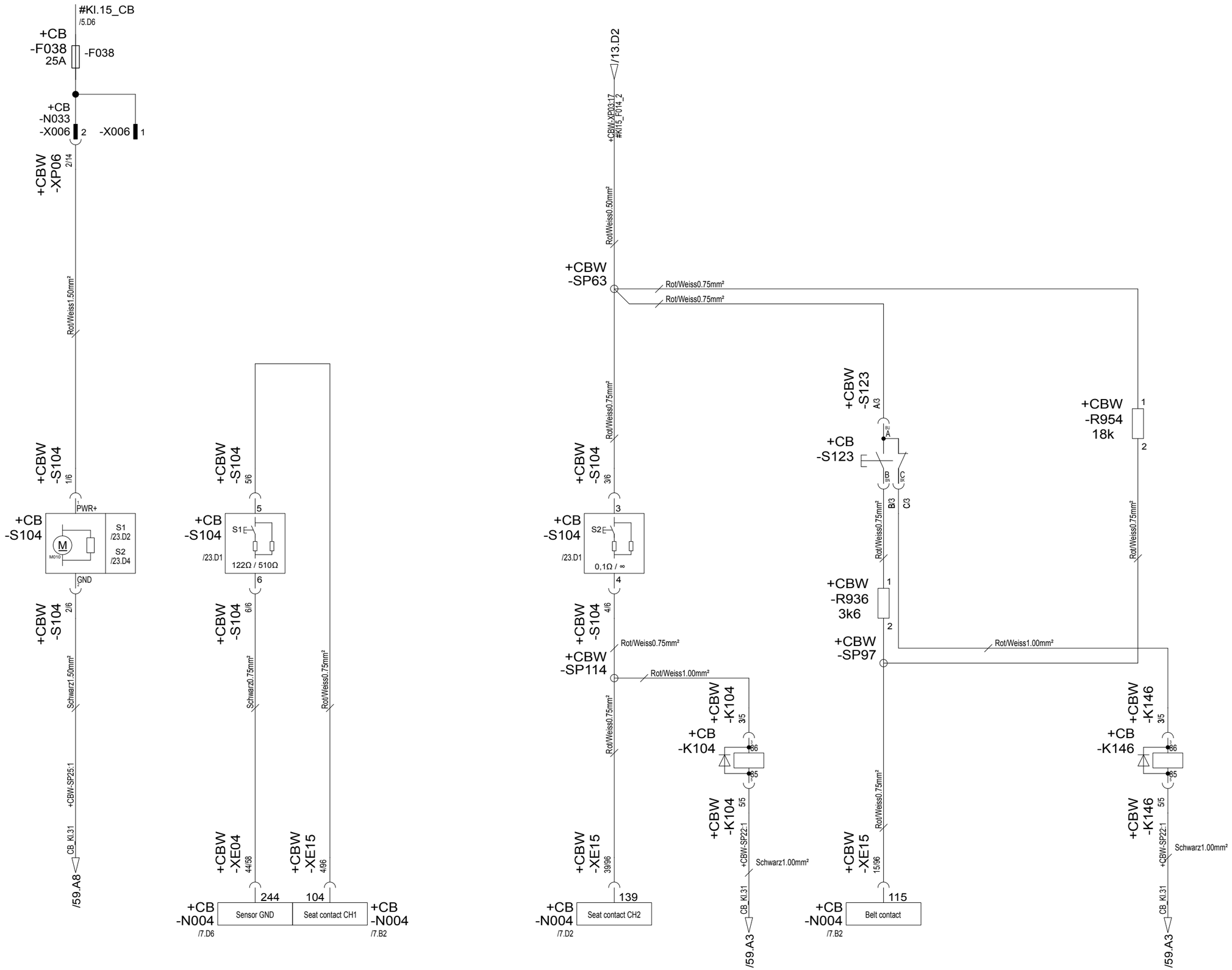

KRAMER
Kramer Werke GmbH
Wacker Neuson Straße 1 / D- 88630 Pfullendorf
Tel.: +49 (0) 7552 9288 -0
Fax: +49 (0) 7552 9288 -49

Diese Zeichnung darf ohne unsere ausdrückliche Genehmigung weder vervielfältigt, noch dritten Personen oder Mitbewerbern im Original oder als Kopie ausgehändigt werden. Eigentums- und Urheberrecht vorbehalten.

	date	name
User		Inzschwn
Proved	20.06.2016	Inzkraum
Reading station		

Operator seat

Mat.-Nr. 1000364531

Doc.-Nr. 2060093317

Revision	03
Ersetzt Version	02
Gewicht in [kg]	

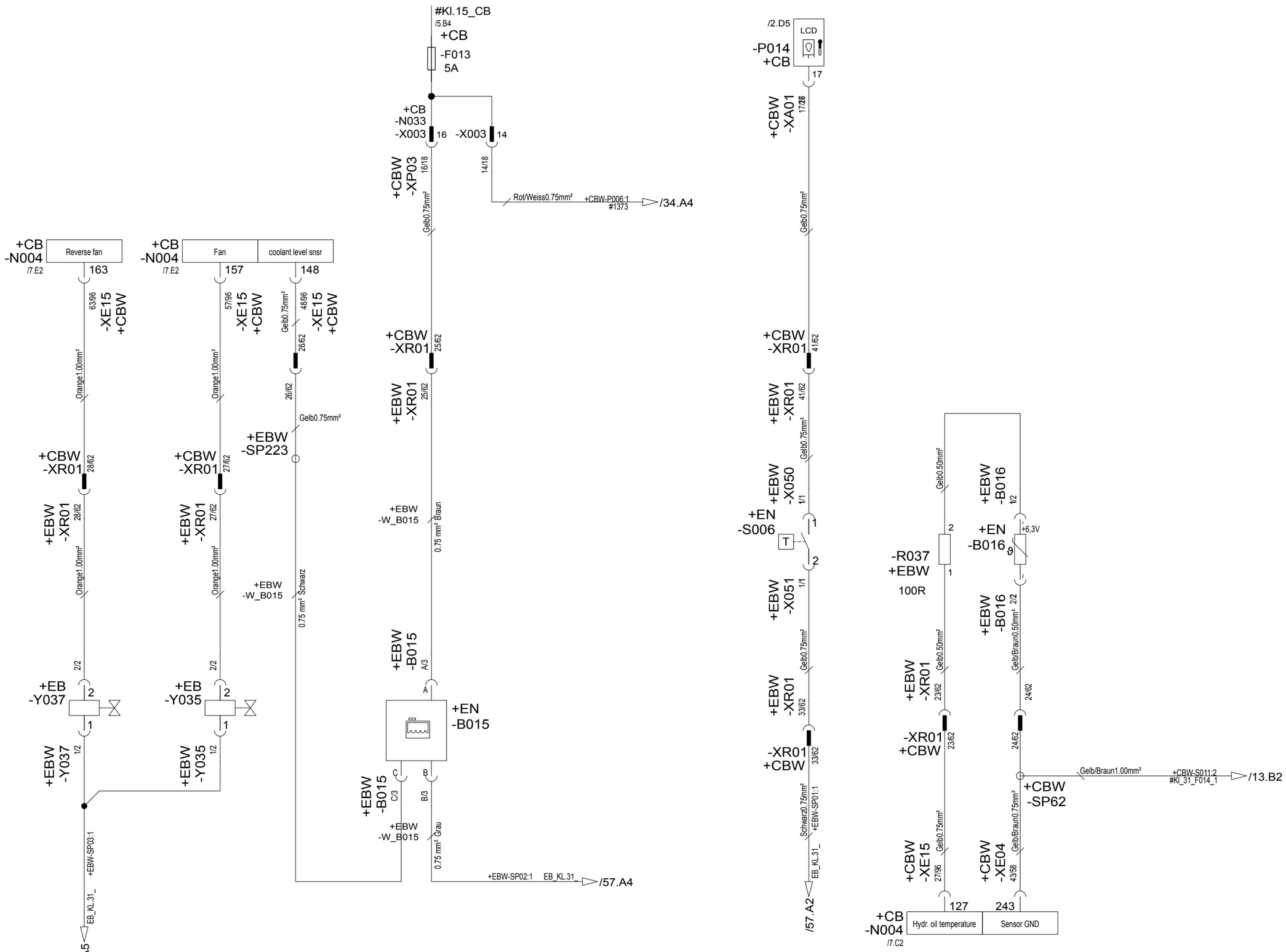

KRAMER
Kramer Werke GmbH
Wacker Neuson Straße 1 / D- 88630 Pfullendorf
Tel.: +49 (0) 7552 9288 -0
Fax: +49 (0) 7552 9288 -49

Diese Zeichnung darf ohne unsere ausdrückliche Genehmigung weder vervielfältigt, noch dritten Personen oder Mitbewerbern im Original oder als Kopie ausgehändigt werden. Eigentums- und Urheberrecht vorbehalten.

	date	name
User		Inzschwn
Proved	20.06.2016	Inzkraum
Reading station		

Diesel engine Cooling

Mat.-Nr. 1000364531 Doc.-Nr. 2060093317

Revision	03
Ersetzt Version	02
Gewicht in [kg]	

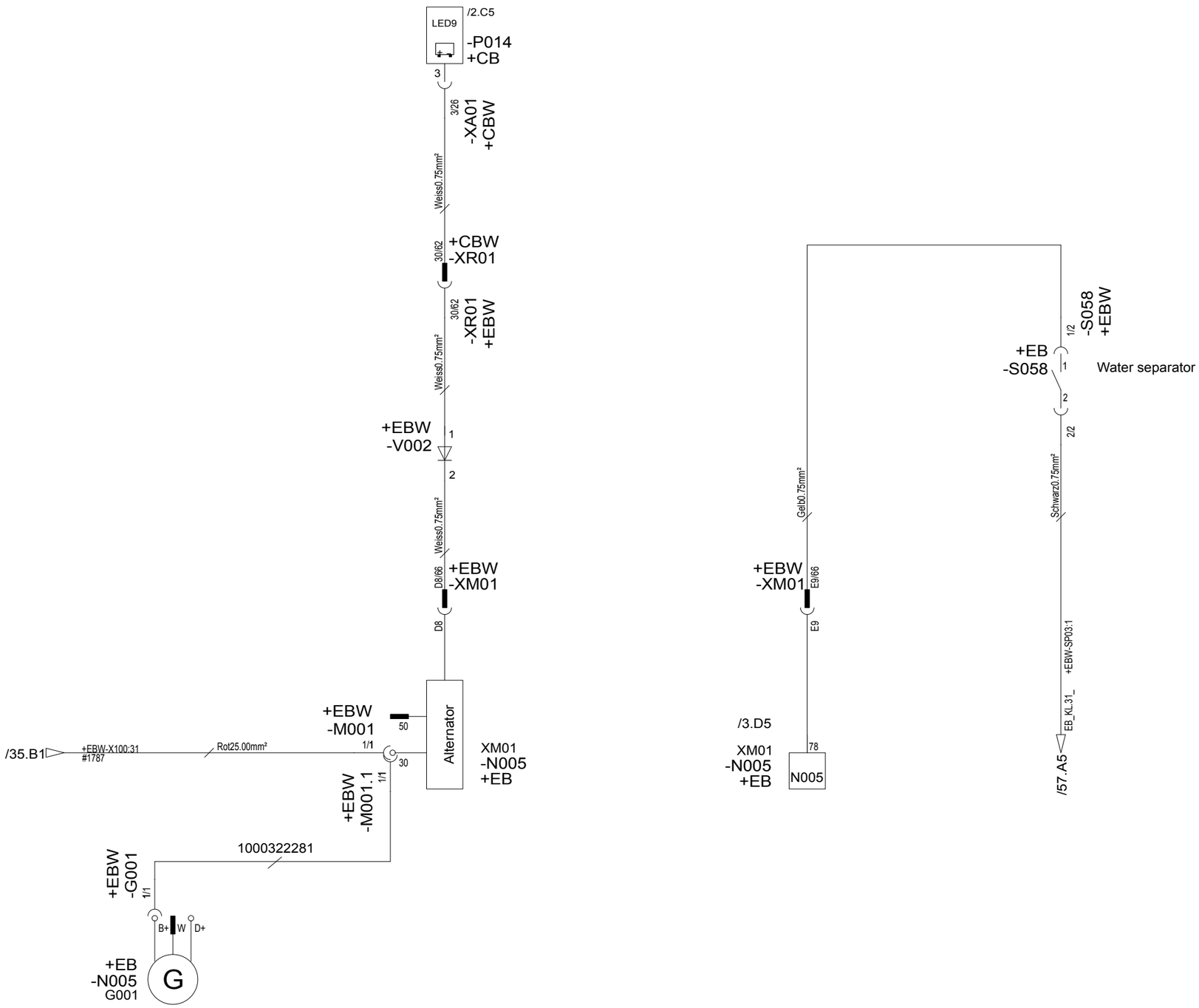

KRAMER
Kramer Werke GmbH
Wacker Neuson Straße 1 / D- 88630 Pfullendorf
Tel.: +49 (0) 7552 9288 -0
Fax: +49 (0) 7552 9288 -49

Diese Zeichnung darf ohne unsere ausdrückliche Genehmigung weder vervielfältigt, noch dritten Personen oder Mitbewerbern im Original oder als Kopie ausgehändigt werden. Eigentums- und Urheberrecht vorbehalten.

	date	name
User		Inzstuea1
Proved	20.06.2016	Inzkraum
Reading station		

Diesel engine parts

Mat.-Nr. 1000364531 Doc.-Nr. 2060093317

Revision	03
Ersetzt Version	02
Gewicht in [kg]	

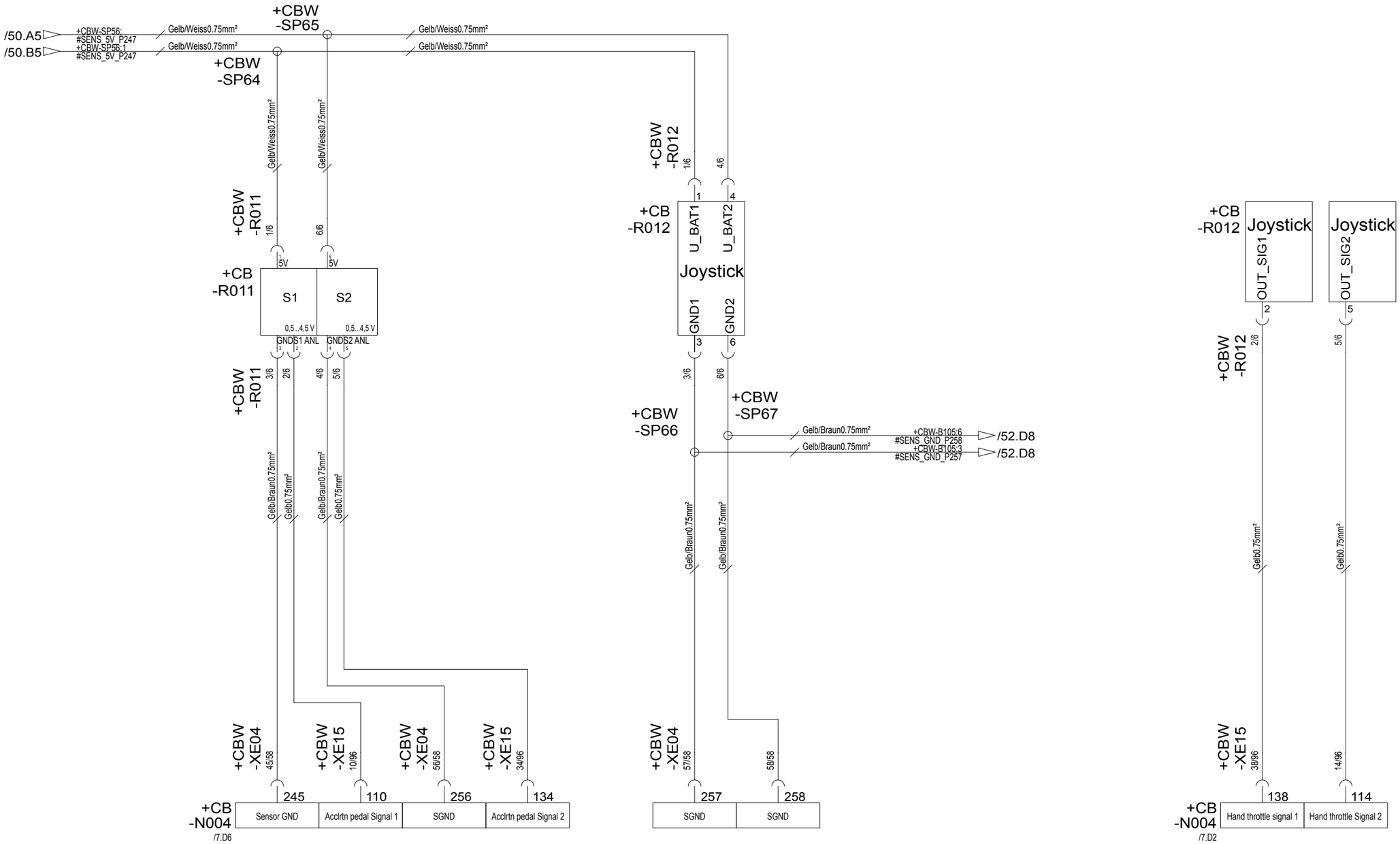

KRAMER
Kramer Werke GmbH
Wacker Neuson Straße 1 / D- 88630 Pfullendorf
Tel.: +49 (0) 7552 9288 -0
Fax: +49 (0) 7552 9288 -49

Diese Zeichnung darf ohne unsere ausdrückliche Genehmigung weder vervielfältigt, noch dritten Personen oder Mitbewerbern im Original oder als Kopie ausgehändigt werden. Eigentums- und Urheberrecht vorbehalten.

	date	name
User		Inzschwn
Proved	20.06.2016	Inzkraum
Reading station		

Diesel engine RPM throttle

Mat.-Nr. 1000364531 Doc.-Nr. 2060093317

Revision	03
Ersetzt Version	02
Gewicht in [kg]	

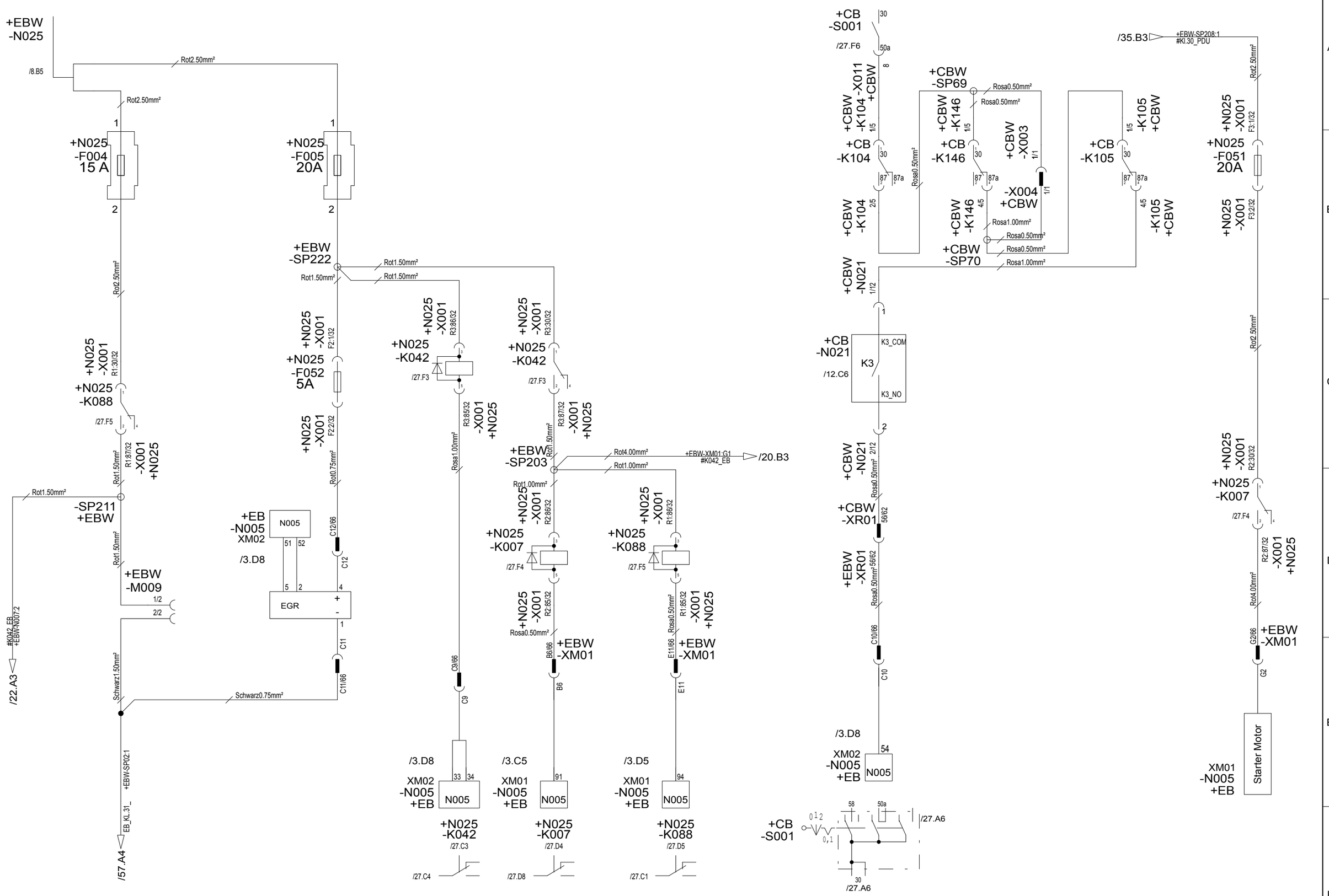

KRAMER
Kramer Werke GmbH
Wacker Neuson Straße 1 / D- 88630 Pfullendorf
Tel.: +49 (0) 7552 9288 -0
Fax: +49 (0) 7552 9288 -49

Diese Zeichnung darf ohne unsere ausdrückliche Genehmigung weder vervielfältigt, noch dritten Personen oder Mitbewerbern im Original oder als Kopie ausgehändigt werden. Eigentums- und Urheberrecht vorbehalten.

	date	name
User		Inzschwn
Proved	20.06.2016	Inzkraum
Reading station		

Diesel engine Start

Mat.-Nr. 1000364531 Doc.-Nr. 2060093317

Revision	03
Ersetzt Version	02
Gewicht in [kg]	

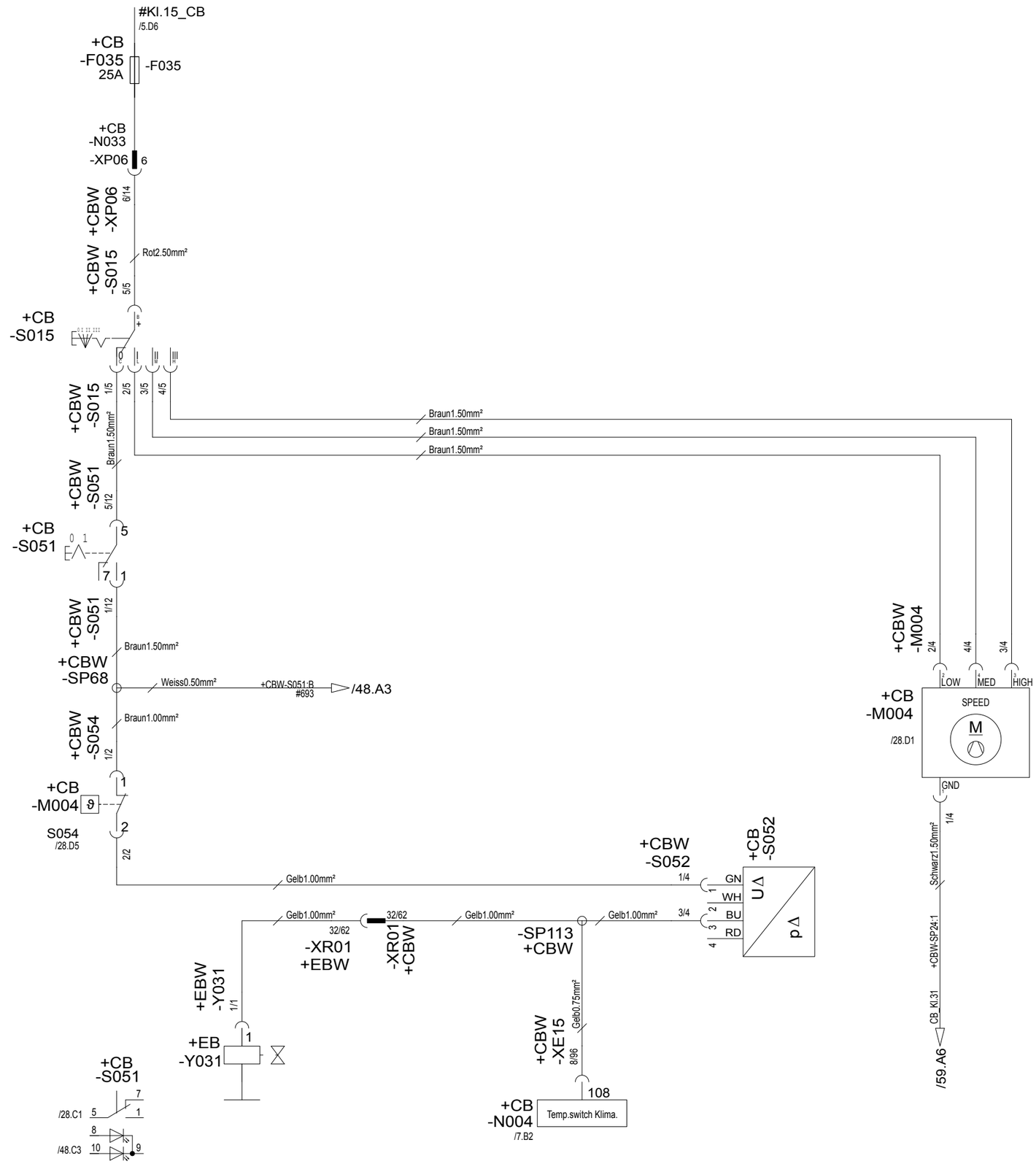

KRAMER
Kramer Werke GmbH
Wacker Neuson Straße 1 / D- 88630 Pfullendorf
Tel.: +49 (0) 7552 9288 -0
Fax: +49 (0) 7552 9288 -49

Diese Zeichnung darf ohne unsere ausdrückliche Genehmigung weder vervielfältigt, noch dritten Personen oder Mitbewerbern im Original oder als Kopie ausgehändigt werden. Eigentums- und Urheberrecht vorbehalten.

	date	name
User		Inzschwn
Proved	20.06.2016	Inzkraum
Reading station		

heating and Air conditioning

Mat.-Nr. 1000364531 Doc.-Nr. 2060093317

Revision	03
Ersetzt Version	02
Gewicht in [kg]	

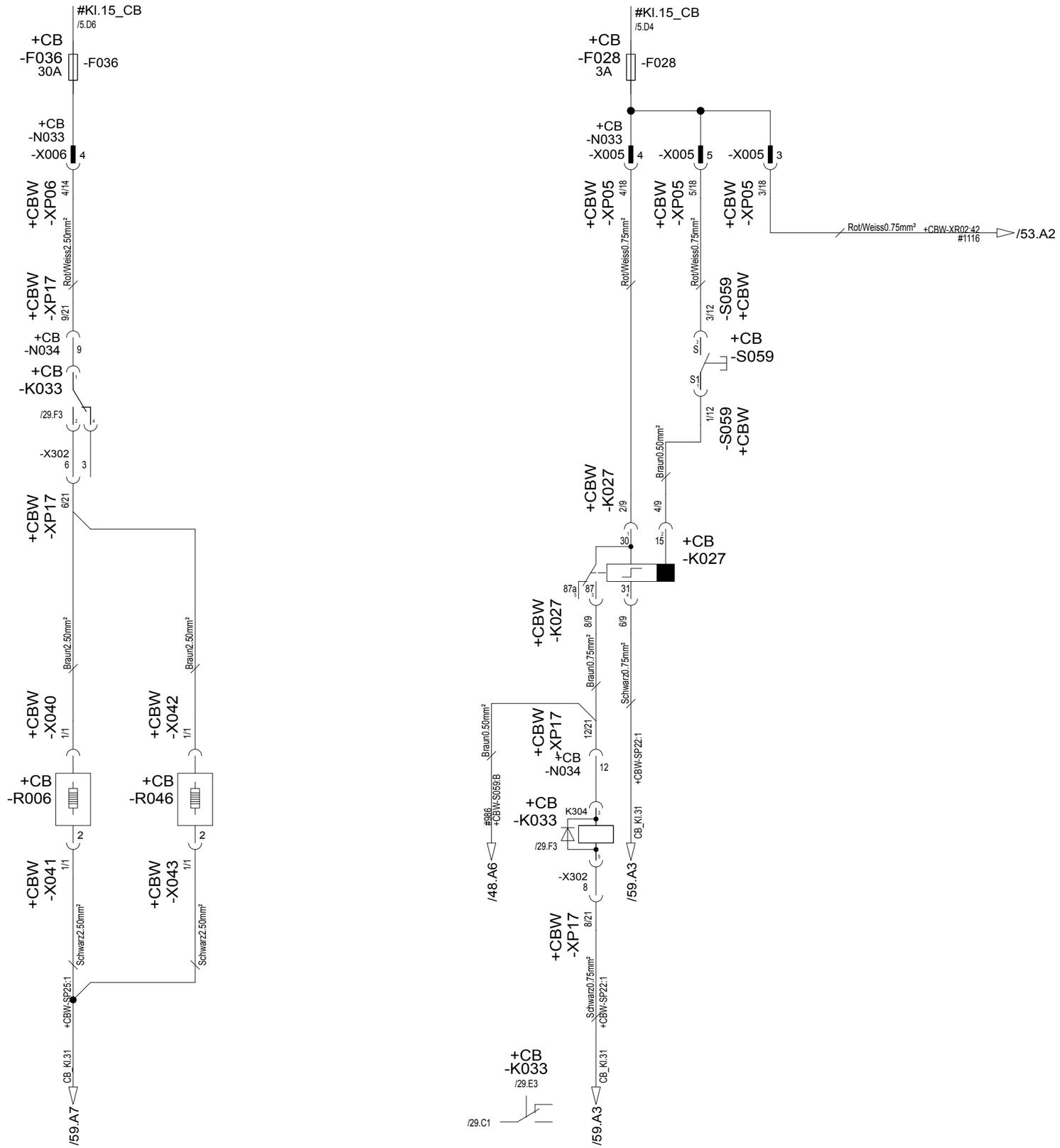

KRAMER
Kramer Werke GmbH
Wacker Neuson Straße 1 / D- 88630 Pfullendorf
Tel.: +49 (0) 7552 9288 -0
Fax: +49 (0) 7552 9288 -49

Diese Zeichnung darf ohne unsere ausdrückliche Genehmigung weder vervielfältigt, noch dritten Personen oder Mitbewerbern im Original oder als Kopie ausgehändigt werden. Eigentums- und Urheberrecht vorbehalten.

	date	name
User		Inzschwn
Proved	20.06.2016	Inzkraum
Reading station		

Window heating

Mat. -Nr. 1000364531

Doc. -Nr. 2060093317

Revision	03
Ersetzt Version	02
Gewicht in [kg]	

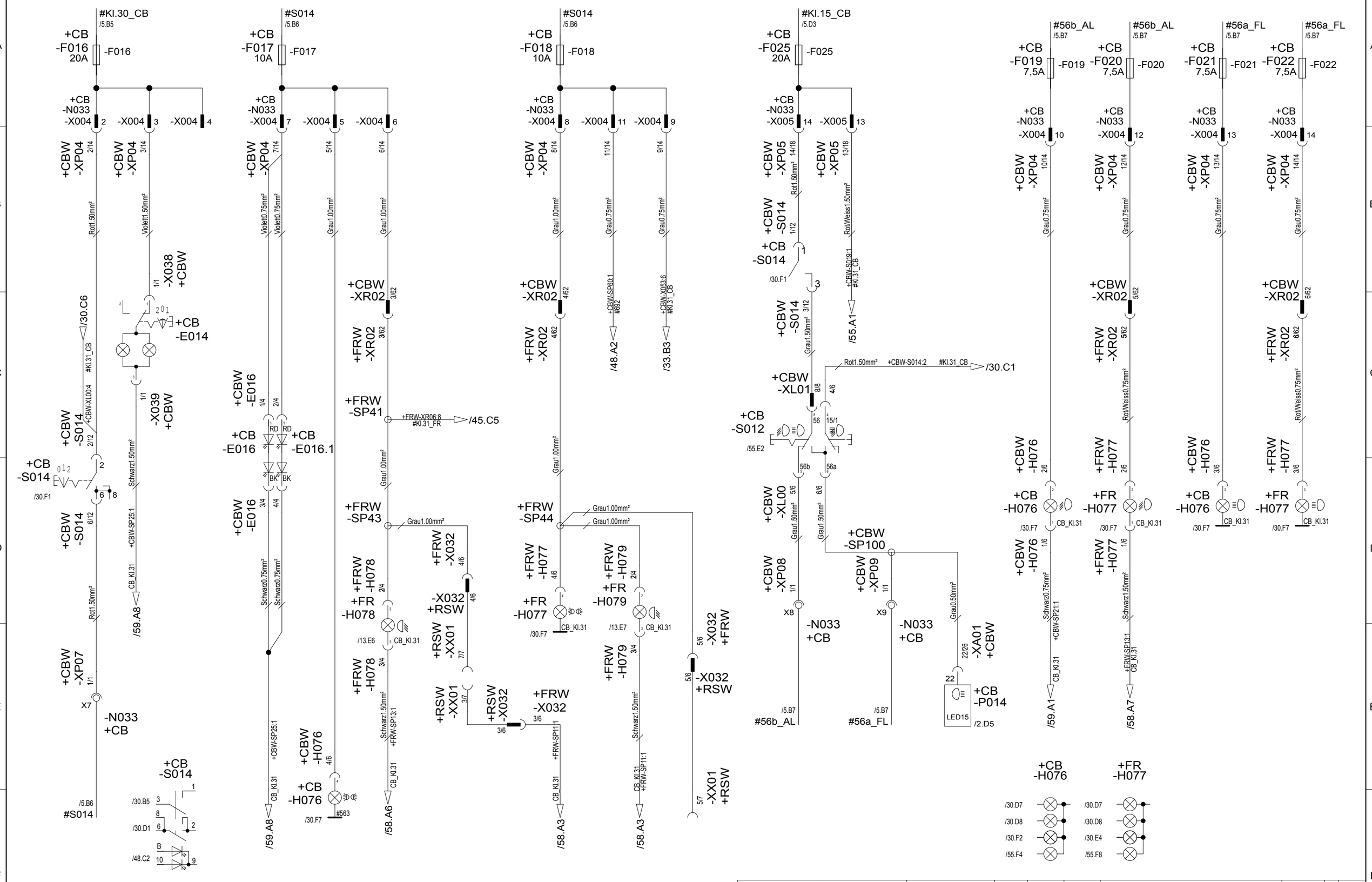

KRAMER
Kramer Werke GmbH
Wacker Neuson Straße 1 / D- 88630 Pfullendorf
Tel.: +49 (0) 7552 9288 -0
Fax: +49 (0) 7552 9288 -49

Diese Zeichnung darf ohne unsere ausdrückliche Genehmigung weder vervielfältigt, noch dritten Personen oder Mitbewerbern im Original oder als Kopie ausgehändigt werden. Eigentums- und Urheberrecht vorbehalten.

	date	name
User		Inzschwn
Proved	20.06.2016	Inzkraum
Reading station		

illumination

Mat.-Nr. 1000364531 Doc.-Nr. 2060093317

Revision	03
Ersetzt Version	02
Gewicht in [kg]	

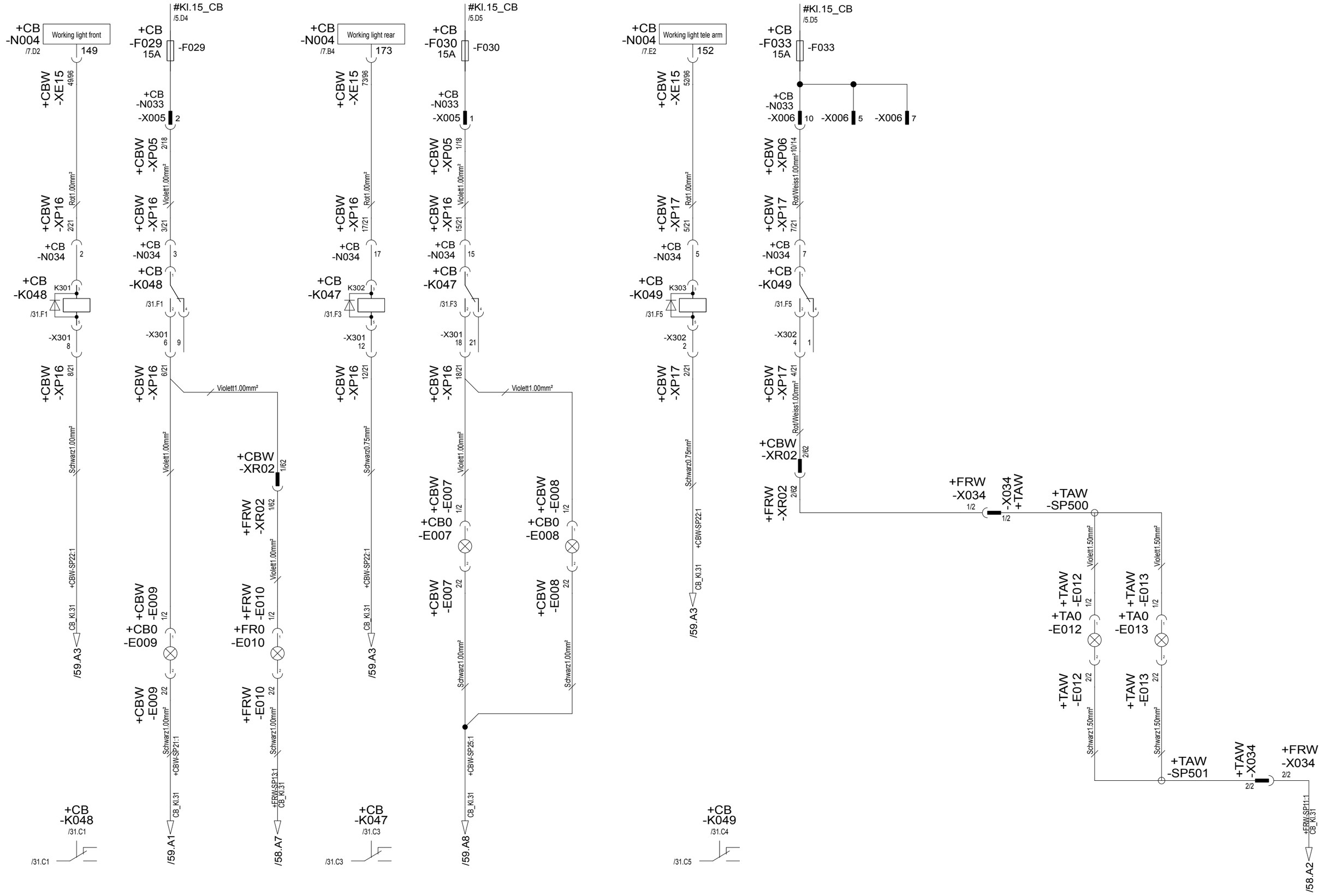

KRAMER
Kramer Werke GmbH
Wacker Neuson Straße 1 / D- 88630 Pfullendorf
Tel.: +49 (0) 7552 9288 -0
Fax: +49 (0) 7552 9288 -49

Diese Zeichnung darf ohne unsere ausdrückliche Genehmigung weder vervielfältigt, noch dritten Personen oder Mitbewerbern im Original oder als Kopie ausgehändigt werden. Eigentums- und Urheberrecht vorbehalten.

	date	name
User		Inzschwn
Proved	20.06.2016	Inzkraum
Reading station		

Working head lamps

Mat.-Nr. 1000364531 Doc.-Nr. 2060093317

Revision	03
Ersetzt Version	02
Gewicht in [kg]	

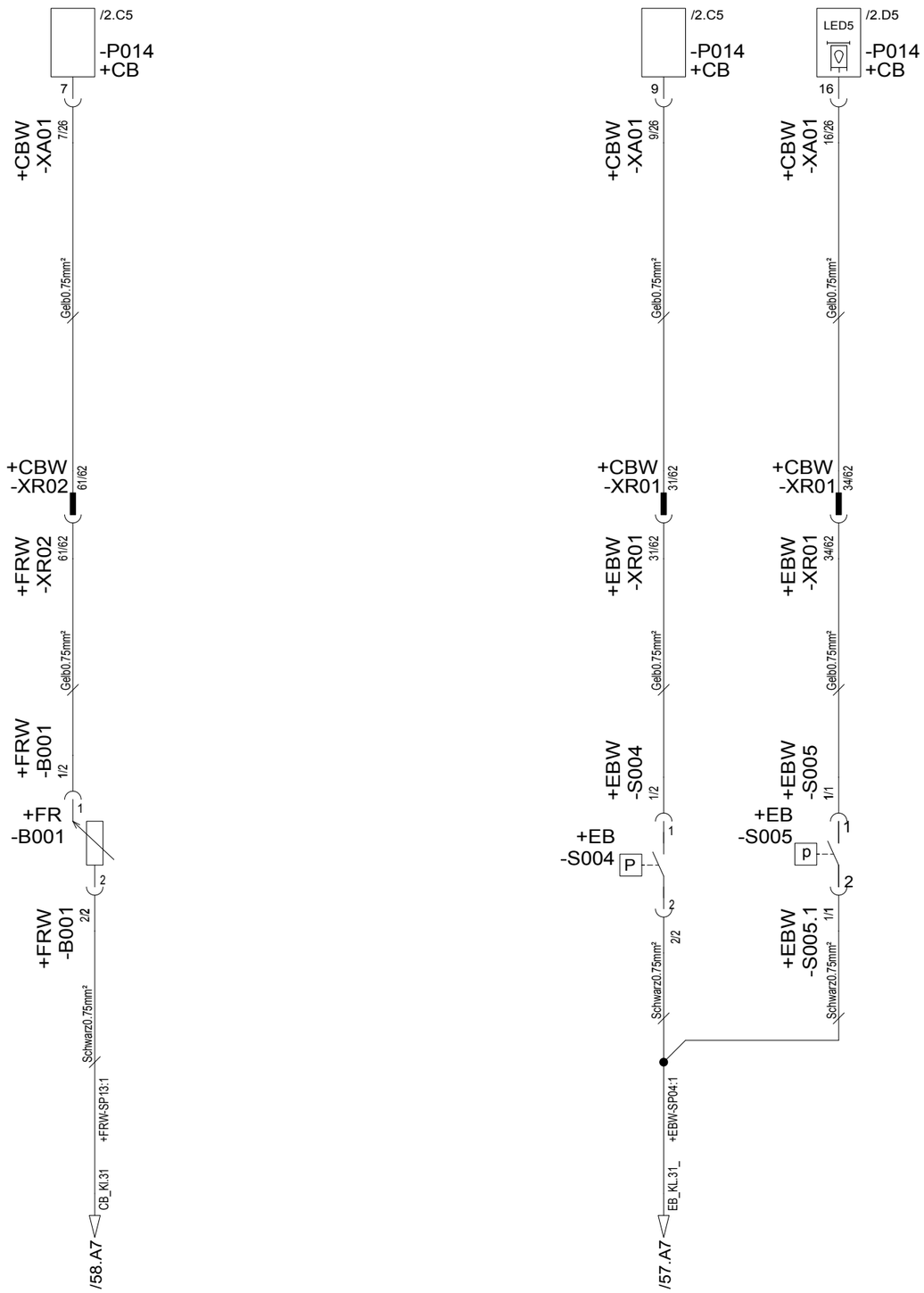

KRAMER
Kramer Werke GmbH
Wacker Neuson Straße 1 / D- 88630 Pfullendorf
Tel.: +49 (0) 7552 9288 -0
Fax: +49 (0) 7552 9288 -49

Diese Zeichnung darf ohne unsere ausdrückliche Genehmigung weder vervielfältigt, noch dritten Personen oder Mitbewerbern im Original oder als Kopie ausgehändigt werden. Eigentums- und Urheberrecht vorbehalten.

	date	name
User		Inzschwn
Proved	20.06.2016	Inzkraum
Reading station		

Indicating instrument

Mat.-Nr. 1000364531 Doc.-Nr. 2060093317

Revision	03
Ersetzt Version	02
Gewicht in [kg]	

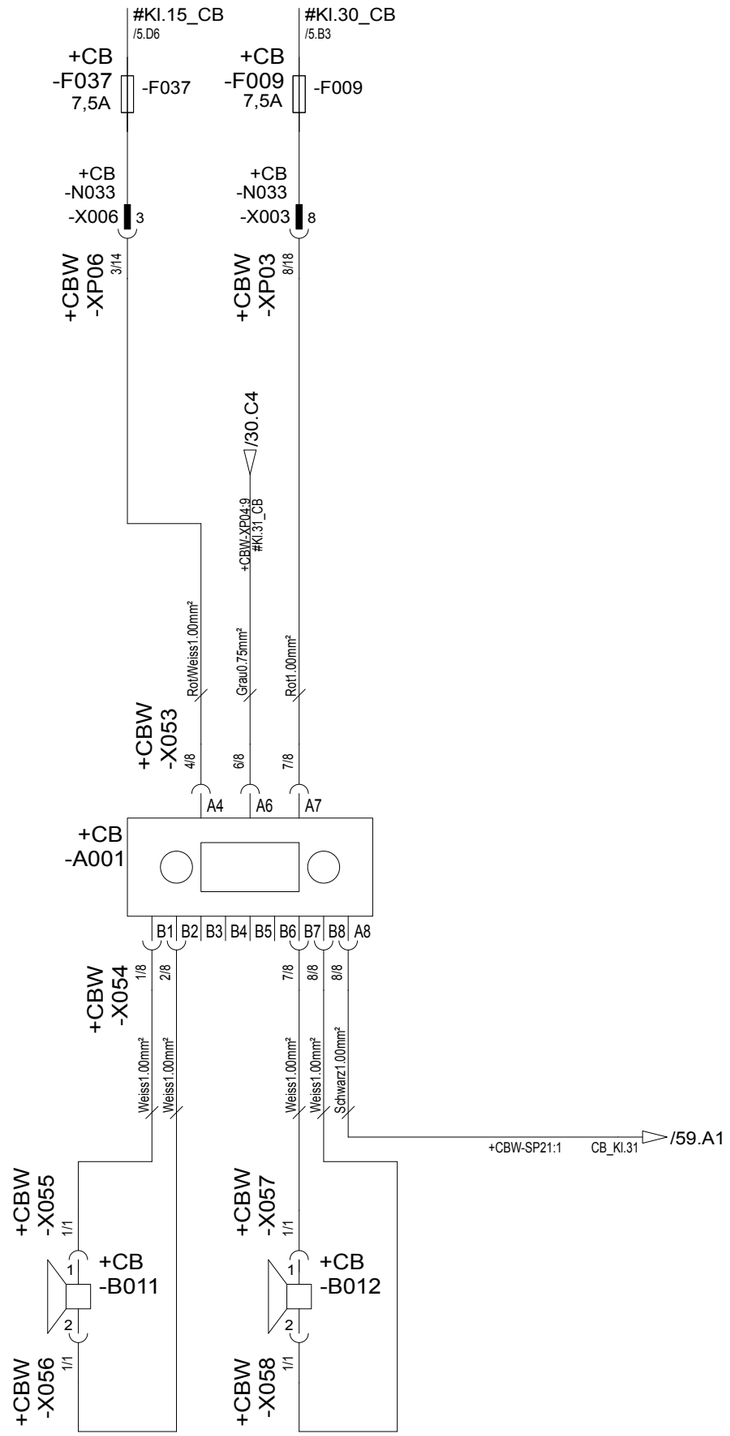

KRAMER
Kramer Werke GmbH
Wacker Neuson Straße 1 / D- 88630 Pfullendorf
Tel.: +49 (0) 7552 9288 -0
Fax: +49 (0) 7552 9288 -49

Diese Zeichnung darf ohne unsere ausdrückliche Genehmigung weder vervielfältigt, noch dritten Personen oder Mitbewerbern im Original oder als Kopie ausgehändigt werden. Eigentums- und Urheberrecht vorbehalten.

	date	name
User		Inzschwn
Proved	20.06.2016	Inzkraum
Reading station		

Radio

Mat.-Nr. 1000364531

Doc.-Nr. 2060093317

Revision	03
Ersetzt Version	02
Gewicht in [kg]	

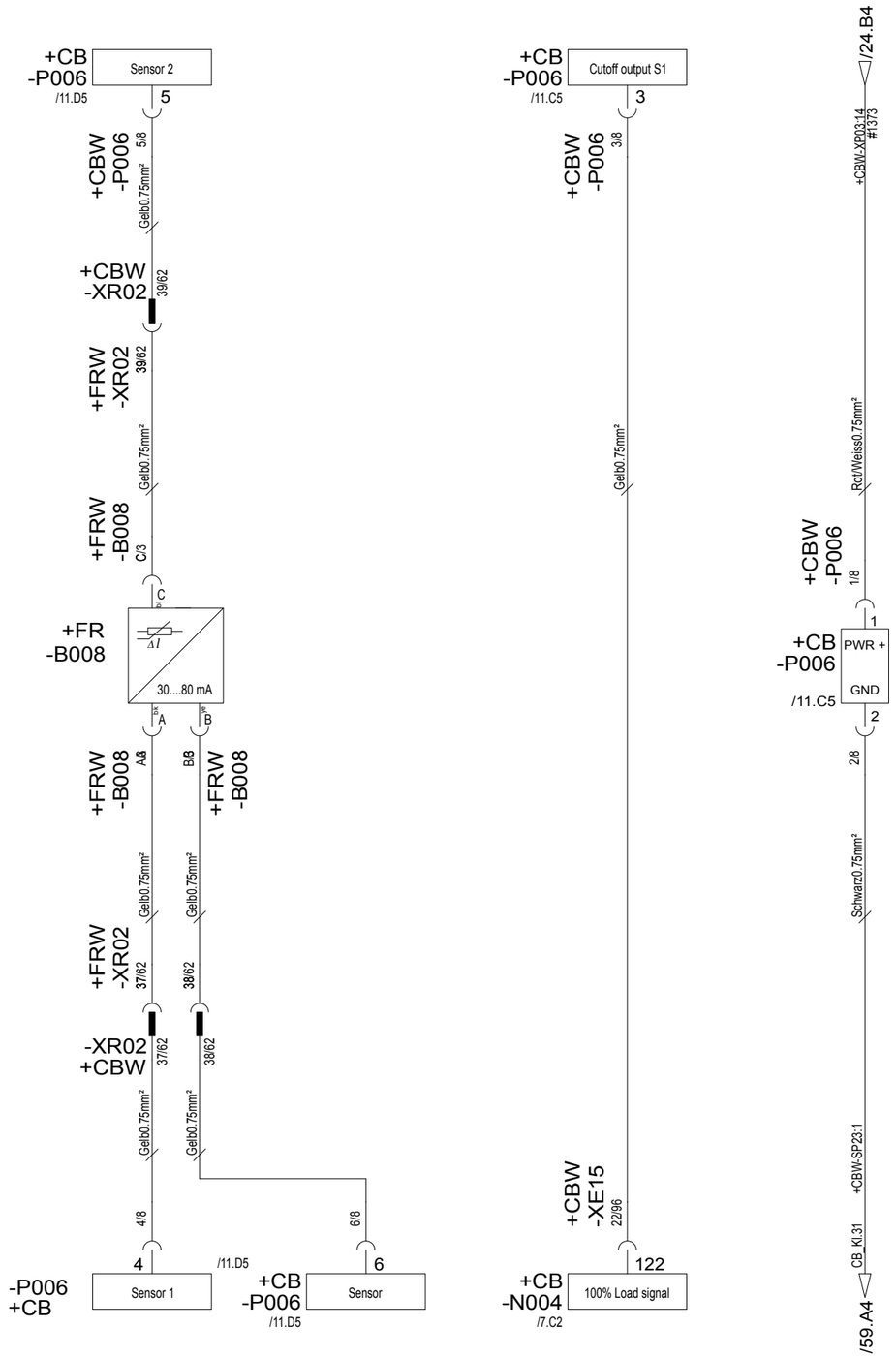

KRAMER
Kramer Werke GmbH
Wacker Neuson Straße 1 / D- 88630 Pfullendorf
Tel.: +49 (0) 7552 9288 -0
Fax: +49 (0) 7552 9288 -49

Diese Zeichnung darf ohne unsere ausdrückliche Genehmigung weder vervielfältigt, noch dritten Personen oder Mitbewerbern im Original oder als Kopie ausgehändigt werden. Eigentums- und Urheberrecht vorbehalten.

	date	name
User		Inzschwn
Proved	20.06.2016	Inzkraum
Reading station		

Safe load indicator system

Mat. -Nr. 1000364531

Doc. -Nr. 2060093317

Revision	03
Ersetzt Version	02
Gewicht in [kg]	

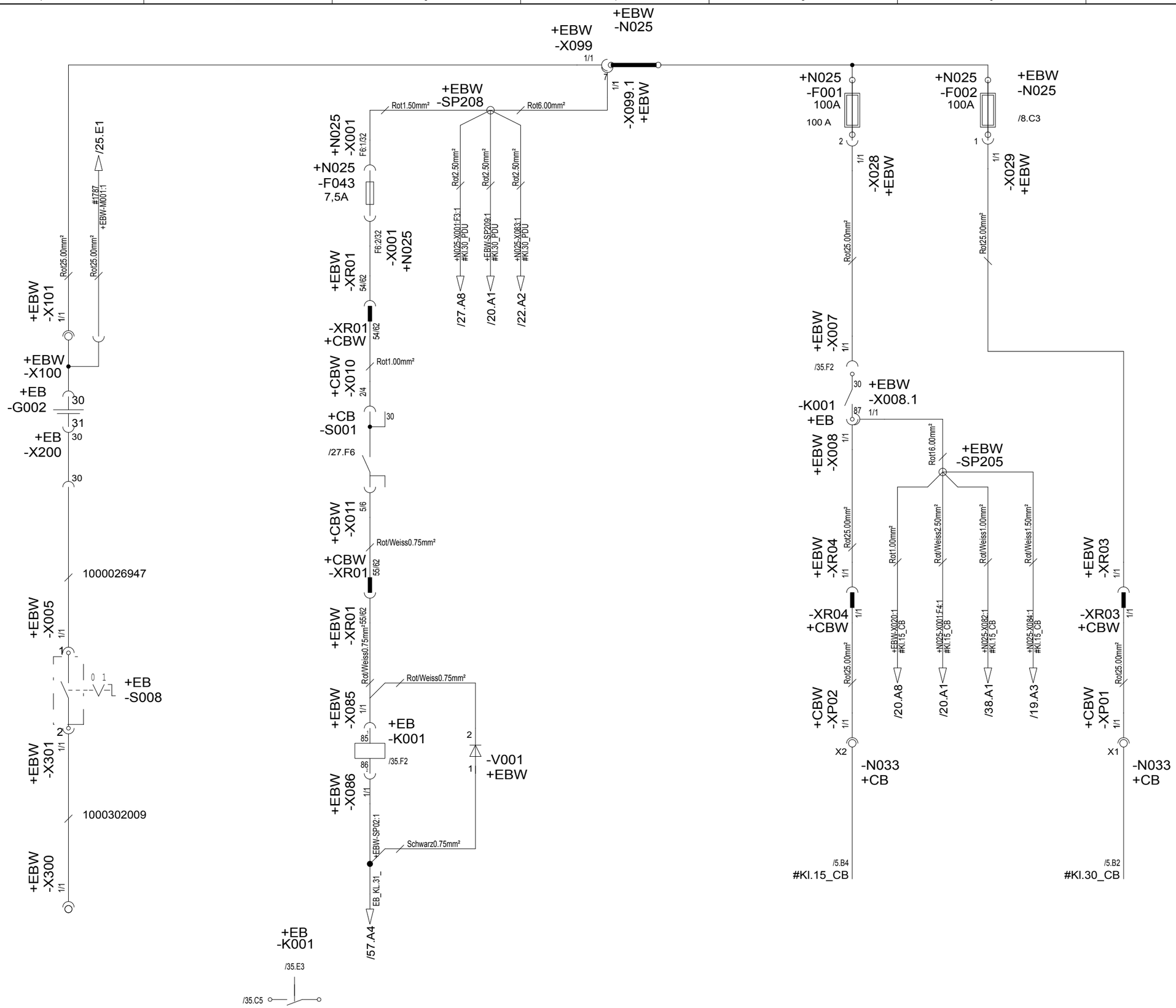

KRAMER
Kramer Werke GmbH
Wacker Neuson Straße 1 / D- 88630 Pfullendorf
Tel.: +49 (0) 7552 9288 -0
Fax: +49 (0) 7552 9288 -49

Diese Zeichnung darf ohne unsere ausdrückliche Genehmigung weder vervielfältigt, noch dritten Personen oder Mitbewerbern im Original oder als Kopie ausgehändigt werden. Eigentums- und Urheberrecht vorbehalten.

	date	name
User		
Proved	20.06.2016	Inzkraum
Reading station		

Electrical power supply

Mat.-Nr. 1000364531 Doc.-Nr. 2060093317

Revision	03
Ersetzt Version	02
Gewicht in [kg]	

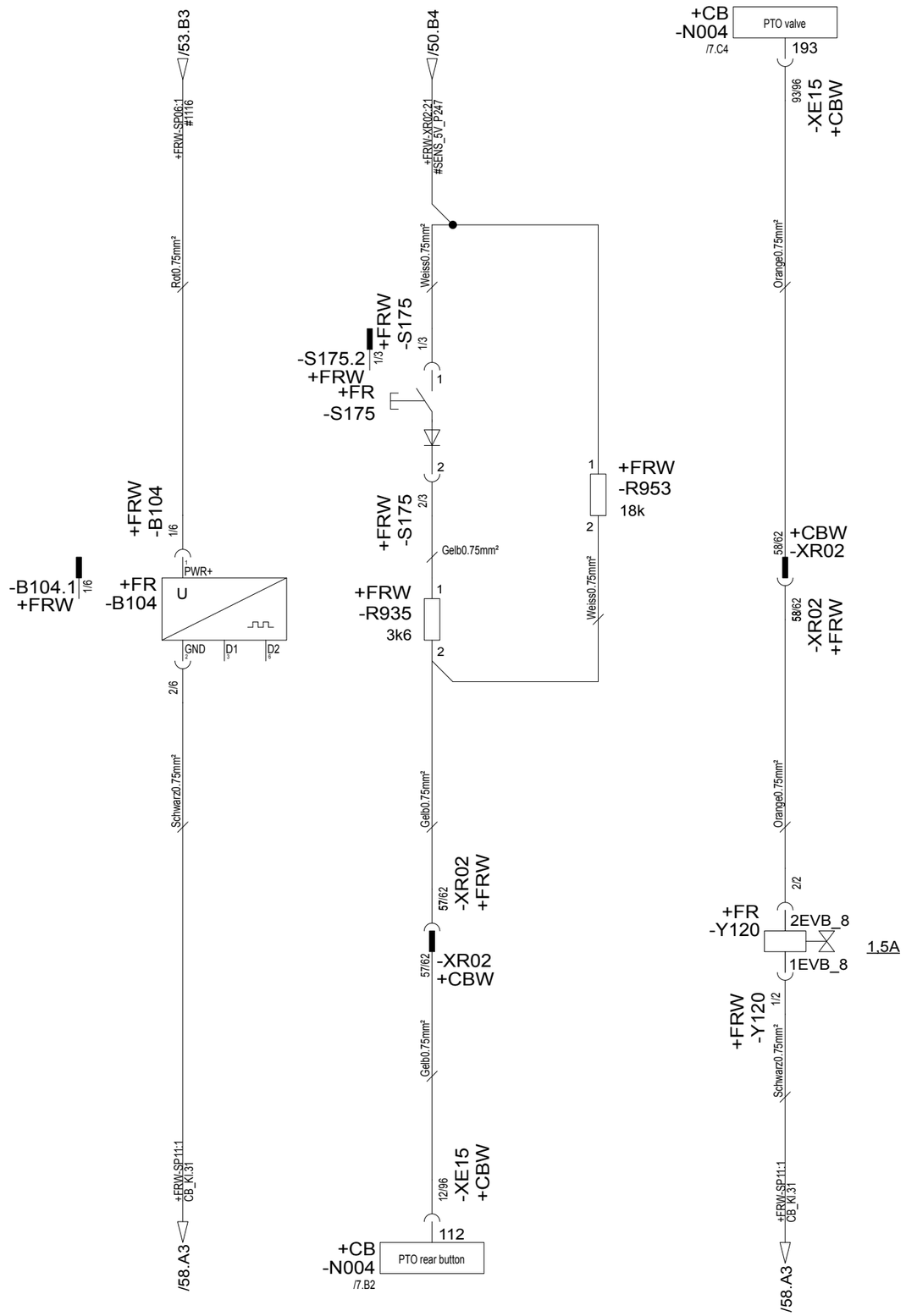

KRAMER
Kramer Werke GmbH
Wacker Neuson Straße 1 / D- 88630 Pfullendorf
Tel.: +49 (0) 7552 9288 -0
Fax: +49 (0) 7552 9288 -49

Diese Zeichnung darf ohne unsere ausdrückliche Genehmigung weder vervielfältigt, noch dritten Personen oder Mitbewerbern im Original oder als Kopie ausgehändigt werden. Eigentums- und Urheberrecht vorbehalten.

	date	name
User		Inzschwn
Proved	20.06.2016	Inzkraum
Reading station		

PTO shaft

Mat. -Nr. 1000364531

Doc. -Nr. 2060093317

Revision	03
Ersetzt Version	02
Gewicht in [kg]	

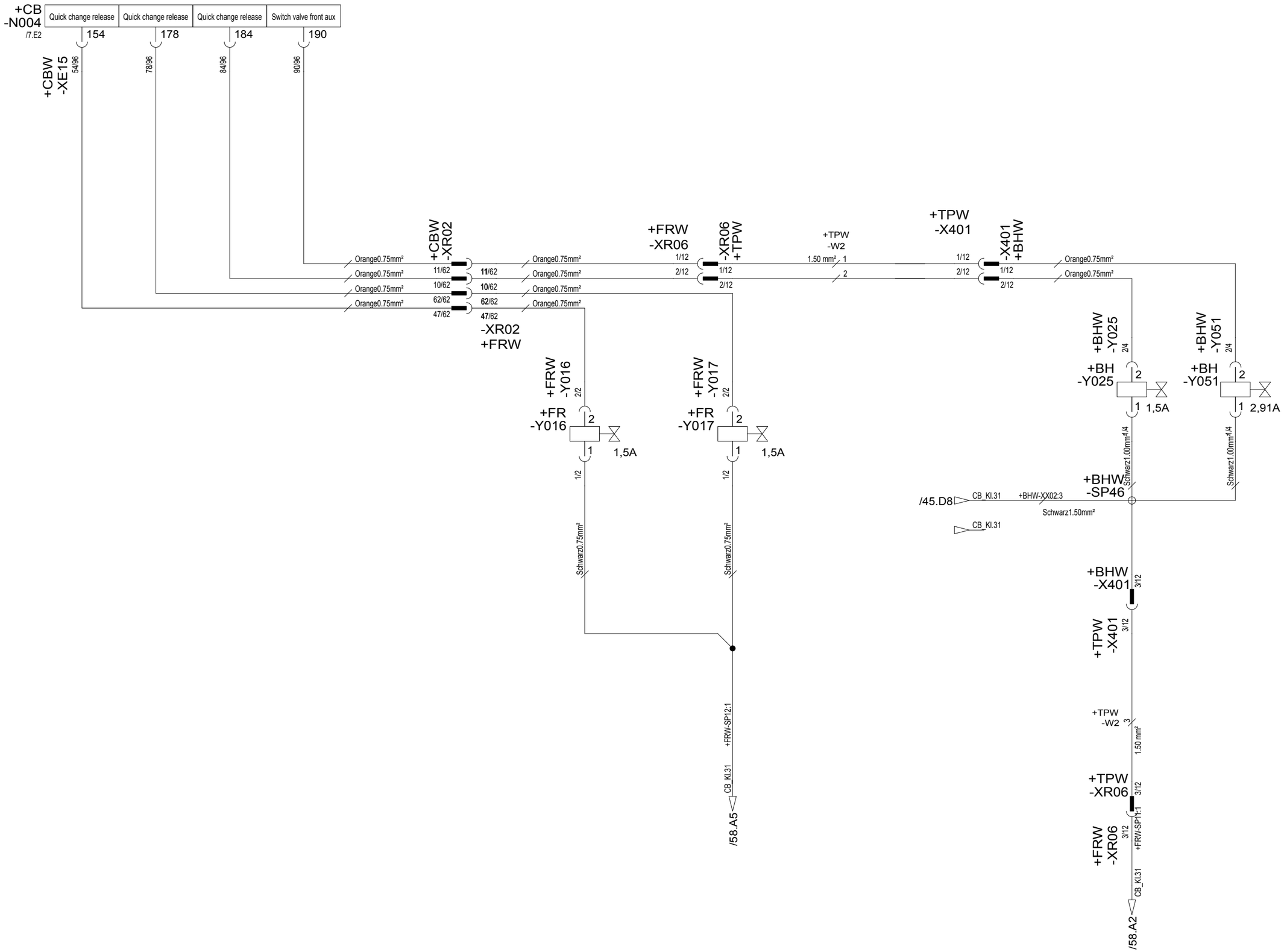

KRAMER
Kramer Werke GmbH
Wacker Neuson Straße 1 / D- 88630 Pfullendorf
Tel.: +49 (0) 7552 9288 -0
Fax: +49 (0) 7552 9288 -49

Diese Zeichnung darf ohne unsere ausdrückliche Genehmigung weder vervielfältigt, noch dritten Personen oder Mitbewerbern im Original oder als Kopie ausgehändigt werden. Eigentums- und Urheberrecht vorbehalten.

	date	name
User		Inzschwn
Proved	20.06.2016	Inzkraum
Reading station		

Quickhitch facility

Mat.-Nr. 1000364531 Doc.-Nr. 2060093317

Revision	03
Ersetzt Version	02
Gewicht in [kg]	

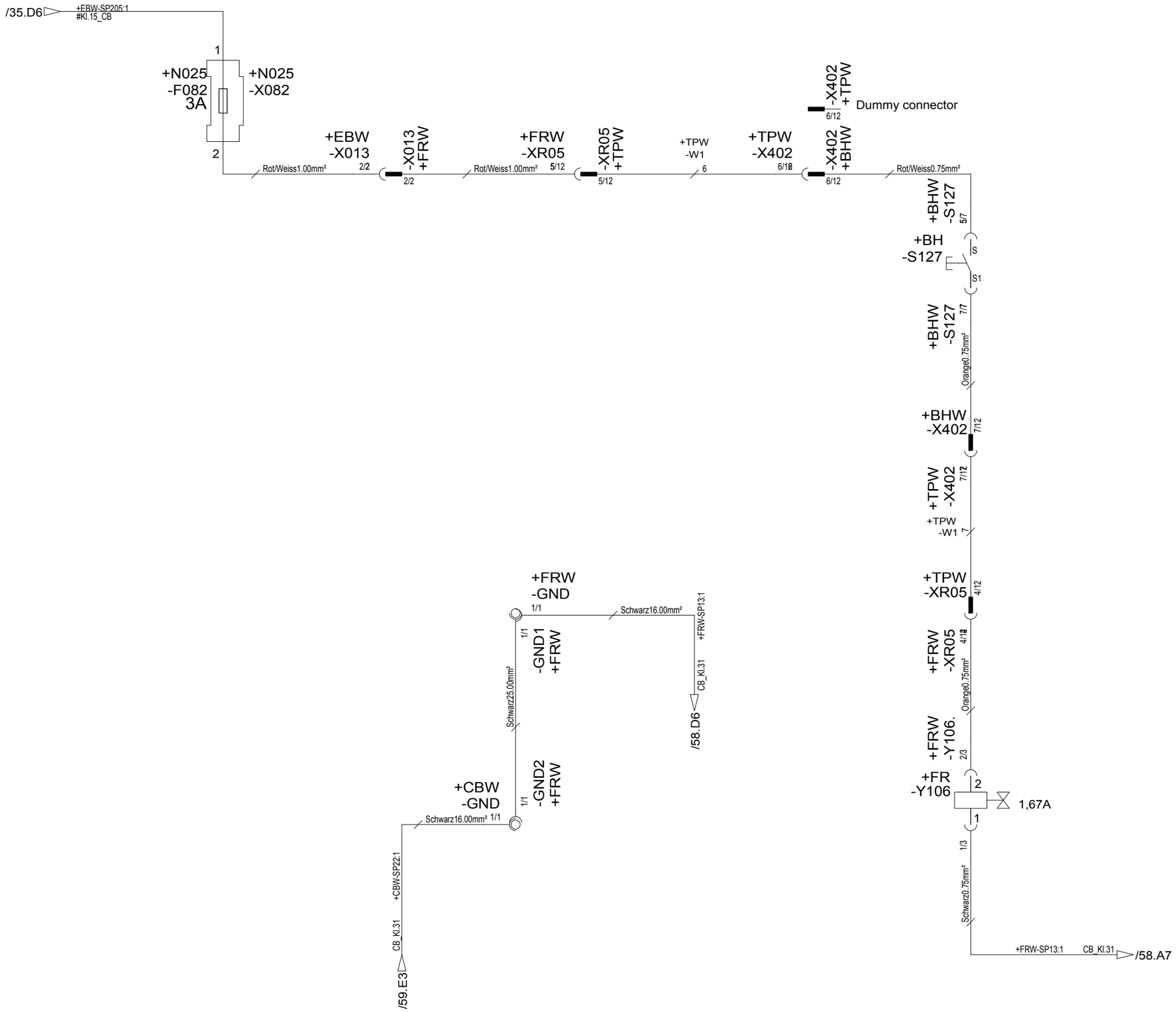

KRAMER
Kramer Werke GmbH
Wacker Neuson Straße 1 / D- 88630 Pfullendorf
Tel.: +49 (0) 7552 9288 -0
Fax: +49 (0) 7552 9288 -49

Diese Zeichnung darf ohne unsere ausdrückliche Genehmigung weder vervielfältigt, noch dritten Personen oder Mitbewerbern im Original oder als Kopie ausgehändigt werden. Eigentums- und Urheberrecht vorbehalten.

	date	name
User		Inzstuea1
Proved	20.06.2016	Inzkraum
Reading station		

Pressure relief

Mat. -Nr. 1000364531

Doc. -Nr. 2060093317

Revision	03
Ersetzt Version	02
Gewicht in [kg]	

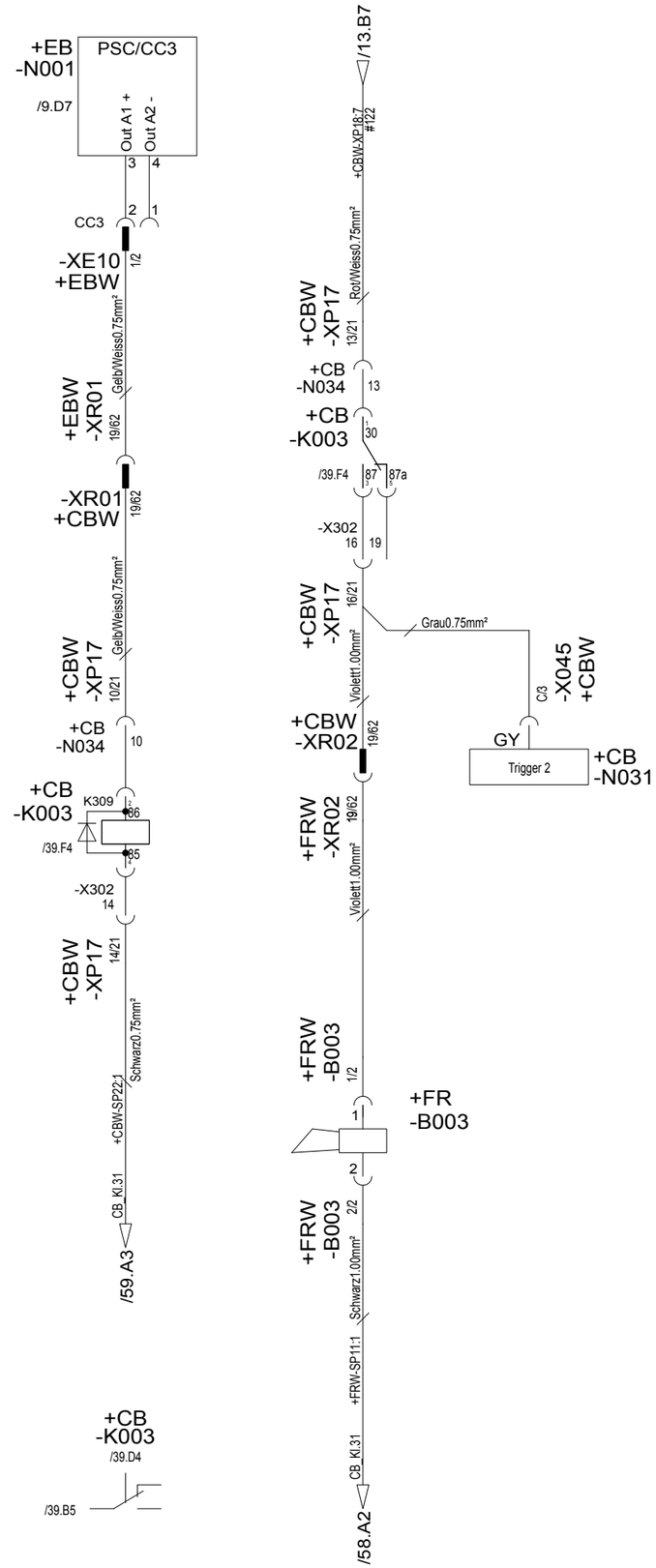

KRAMER
Kramer Werke GmbH
Wacker Neuson Straße 1 / D- 88630 Pfullendorf
Tel.: +49 (0) 7552 9288 -0
Fax: +49 (0) 7552 9288 -49

Diese Zeichnung darf ohne unsere ausdrückliche Genehmigung weder vervielfältigt, noch dritten Personen oder Mitbewerbern im Original oder als Kopie ausgehändigt werden. Eigentums- und Urheberrecht vorbehalten.

	date	name
User		
Proved	20.06.2016	Inzkraum
Reading station		

Reversing light

Mat.-Nr. 1000364531

Doc.-Nr. 2060093317

Revision	03
Ersetzt Version	02
Gewicht in [kg]	

A3

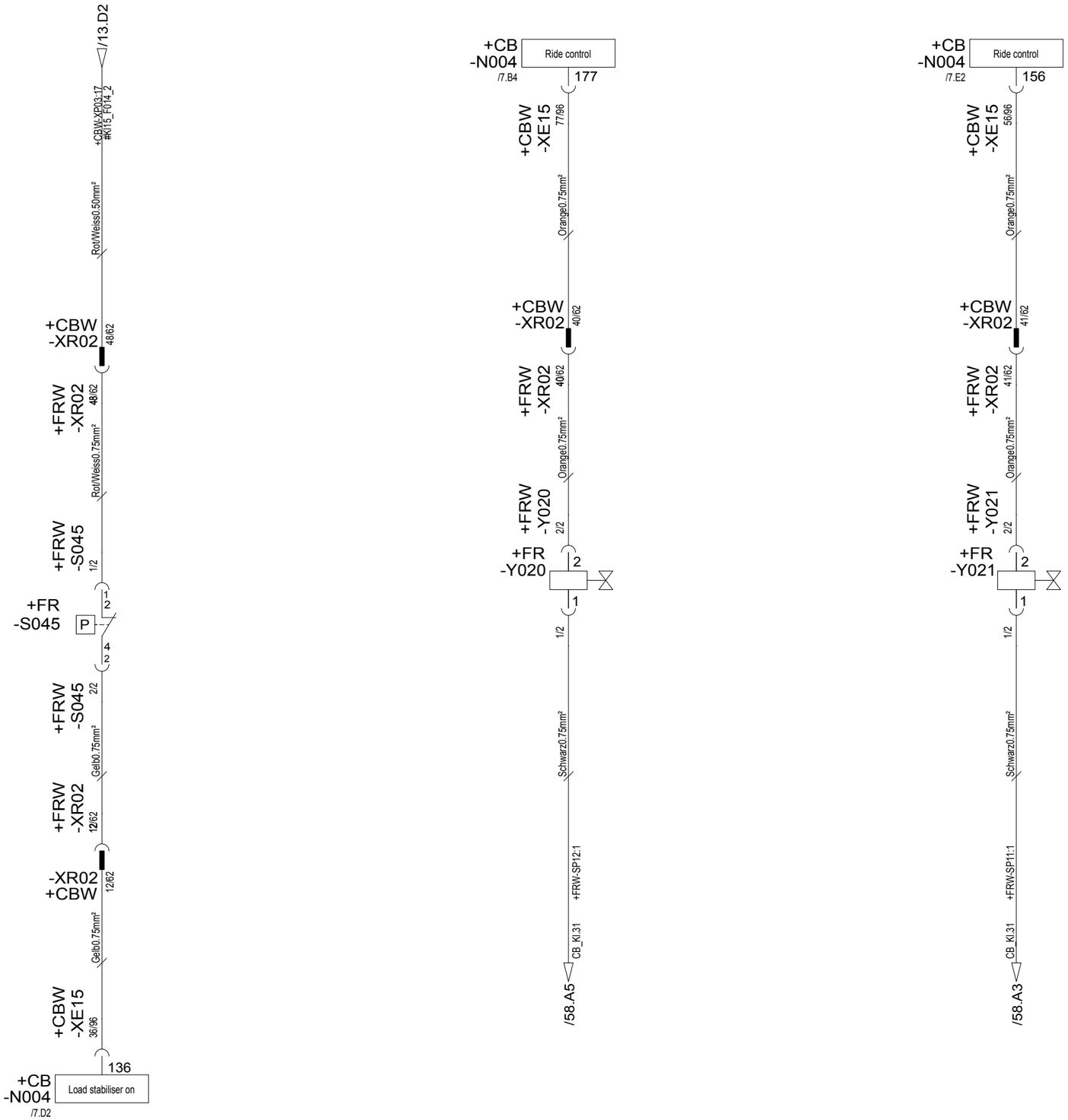

KRAMER
Kramer Werke GmbH
Wacker Neuson Straße 1 / D- 88630 Pfullendorf
Tel.: +49 (0) 7552 9288 -0
Fax: +49 (0) 7552 9288 -49

Diese Zeichnung darf ohne unsere ausdrückliche Genehmigung weder vervielfältigt, noch dritten Personen oder Mitbewerbern im Original oder als Kopie ausgehändigt werden. Eigentums- und Urheberrecht vorbehalten.

	date	name
User		Inzschwn
Proved	20.06.2016	Inzkraum
Reading station		

Load stabiliser

Mat. -Nr. 1000364531

Doc. -Nr. 2060093317

Revision	03
Ersetzt Version	02
Gewicht in [kg]	

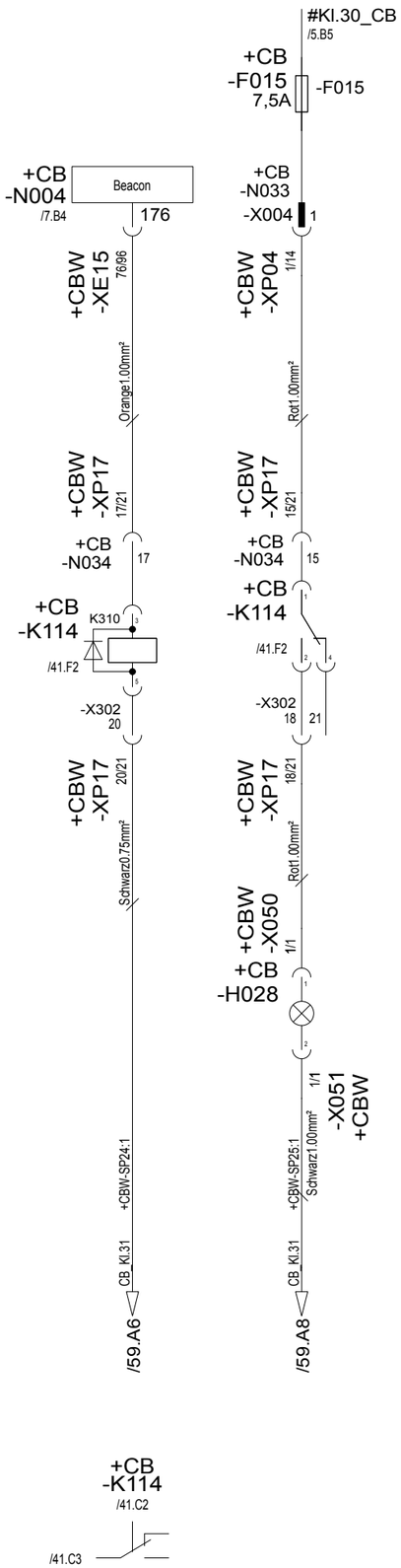

KRAMER
Kramer Werke GmbH
Wacker Neuson Straße 1 / D- 88630 Pfullendorf
Tel.: +49 (0) 7552 9288 -0
Fax: +49 (0) 7552 9288 -49

Diese Zeichnung darf ohne unsere ausdrückliche Genehmigung weder vervielfältigt, noch dritten Personen oder Mitbewerbern im Original oder als Kopie ausgehändigt werden. Eigentums- und Urheberrecht vorbehalten.

	date	name
User		Inzschwn
Proved	20.06.2016	Inzkraum
Reading station		

Rotating beacon

Mat.-Nr. 1000364531 Doc.-Nr. 2060093317

Revision	03
Ersetzt Version	02
Gewicht in [kg]	

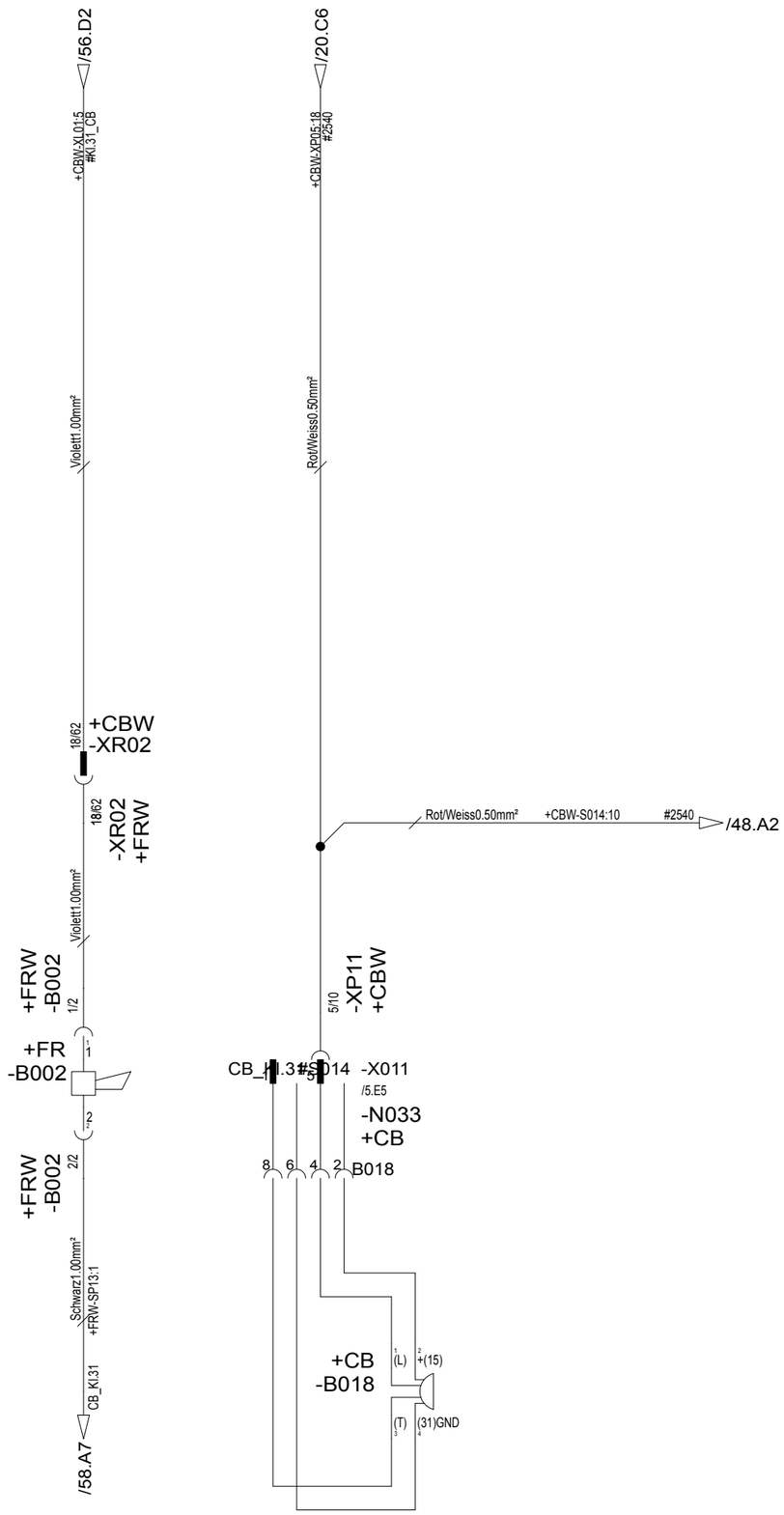

KRAMER
Kramer Werke GmbH
Wacker Neuson Straße 1 / D- 88630 Pfullendorf
Tel.: +49 (0) 7552 9288 -0
Fax: +49 (0) 7552 9288 -49

Diese Zeichnung darf ohne unsere ausdrückliche Genehmigung weder vervielfältigt, noch dritten Personen oder Mitbewerbern im Original oder als Kopie ausgehändigt werden. Eigentums- und Urheberrecht vorbehalten.

	date	name
User		Inzschwn
Proved	20.06.2016	Inzkraum
Reading station		

Horn and Light warning buzzer

Mat. -Nr. 1000364531

Doc. -Nr. 2060093317

Revision	03
Ersetzt Version	02
Gewicht in [kg]	

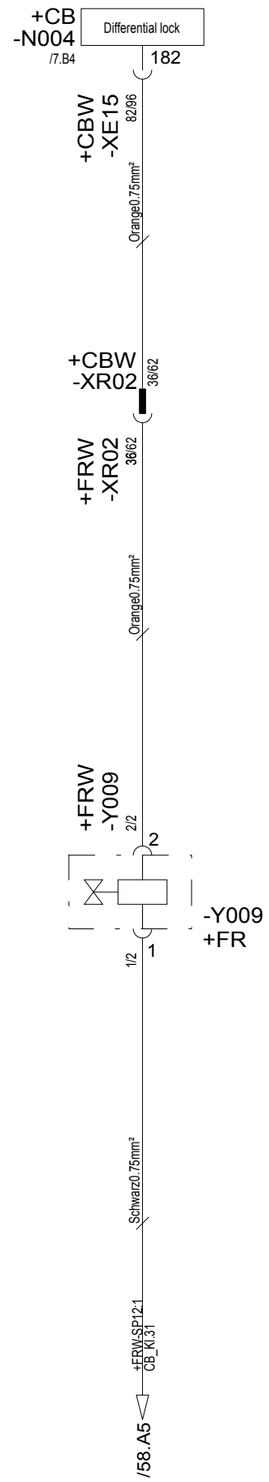

KRAMER
Kramer Werke GmbH
Wacker Neuson Straße 1 / D- 88630 Pfullendorf
Tel.: +49 (0) 7552 9288 -0
Fax: +49 (0) 7552 9288 -49

Diese Zeichnung darf ohne unsere ausdrückliche Genehmigung weder vervielfältigt, noch dritten Personen oder Mitbewerbern im Original oder als Kopie ausgehändigt werden. Eigentums- und Urheberrecht vorbehalten.

	date	name
User		Inzschwn
Proved	20.06.2016	Inzkraum
Reading station		

Differential lock

Mat. -Nr. 1000364531

Doc. -Nr. 2060093317

Revision	03
Ersetzt Version	02
Gewicht in [kg]	

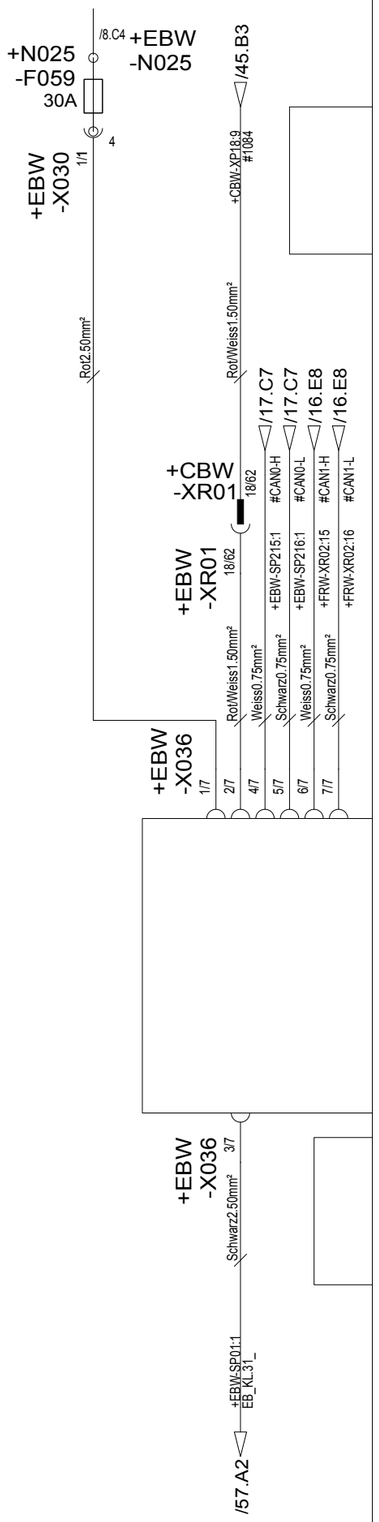

KRAMER
Kramer Werke GmbH
Wacker Neuson Straße 1 / D- 88630 Pfullendorf
Tel.: +49 (0) 7552 9288 -0
Fax: +49 (0) 7552 9288 -49

Diese Zeichnung darf ohne unsere ausdrückliche Genehmigung weder vervielfältigt, noch dritten Personen oder Mitbewerbern im Original oder als Kopie ausgehändigt werden. Eigentums- und Urheberrecht vorbehalten.

	date	name
User		Inzschwn
Proved	20.06.2016	Inzkraum
Reading station		

Front power outlet 14-Pin

Mat. -Nr. 1000364531

Doc. -Nr. 2060093317

Revision	03
Ersetzt Version	02
Gewicht in [kg]	

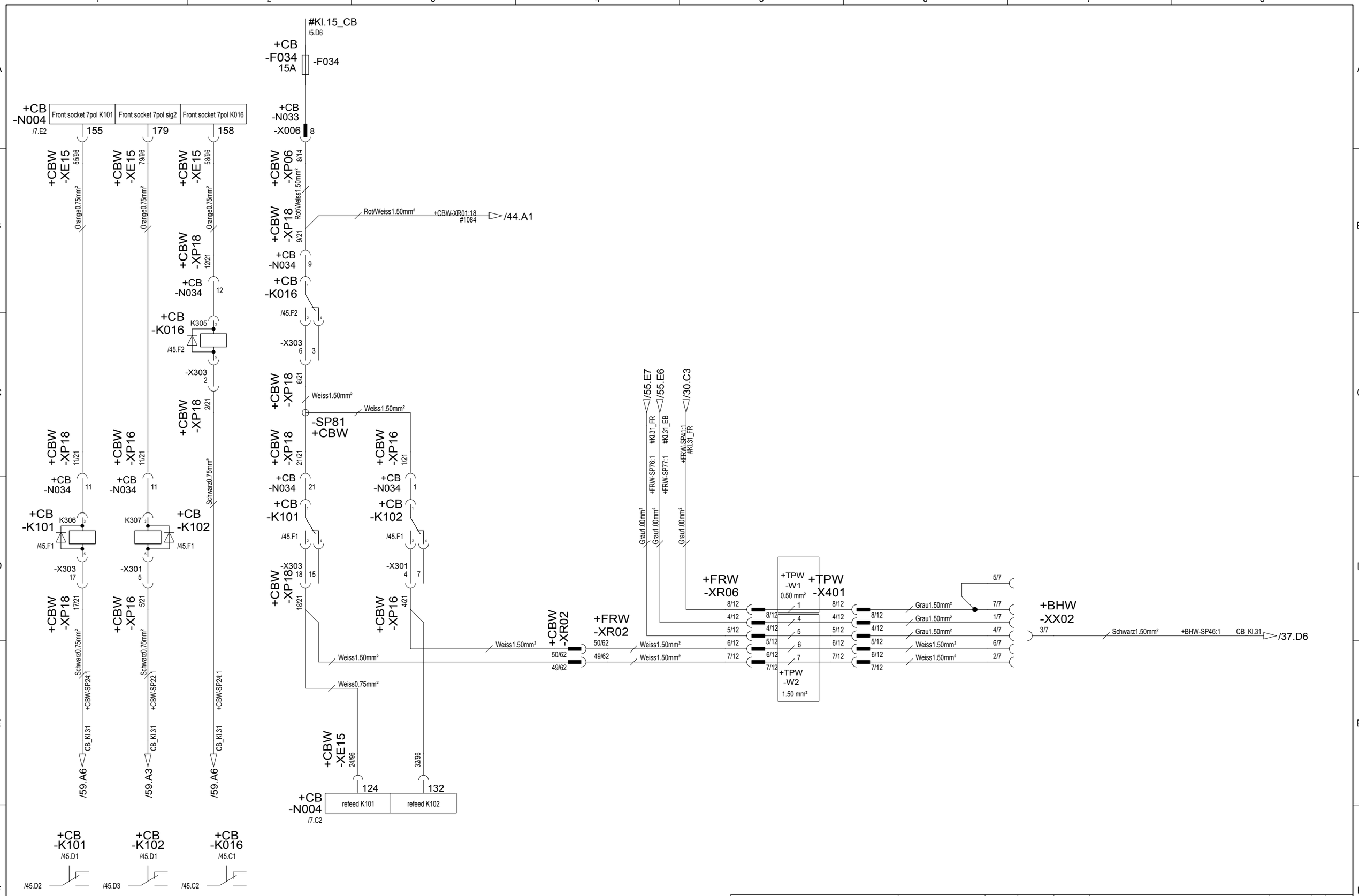

KRAMER
Kramer Werke GmbH
Wacker Neuson Straße 1 / D- 88630 Pfullendorf
Tel.: +49 (0) 7552 9288 -0
Fax: +49 (0) 7552 9288 -49

Diese Zeichnung darf ohne unsere ausdrückliche Genehmigung weder vervielfältigt, noch dritten Personen oder Mitbewerbern im Original oder als Kopie ausgehändigt werden. Eigentums- und Urheberrecht vorbehalten.

	date	name
User		Inzschwn
Proved	20.06.2016	Inzkraum
Reading station		

Front power outlet 7-Pin

Mat.-Nr. 1000364531

Doc.-Nr. 2060093317

Revision	03
Ersetzt Version	02
Gewicht in [kg]	

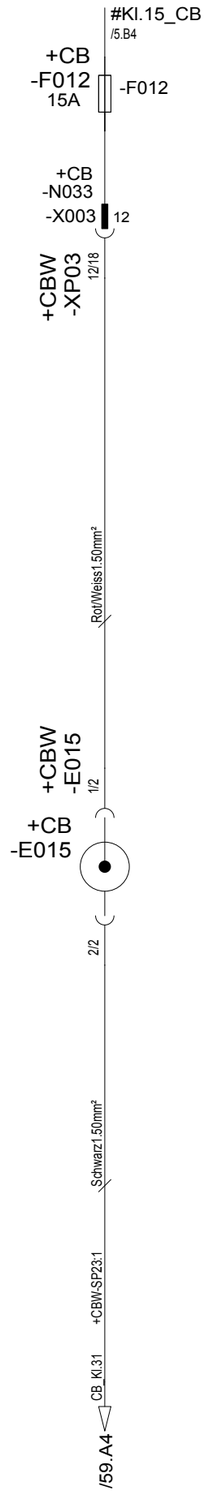

KRAMER
Kramer Werke GmbH
Wacker Neuson Straße 1 / D- 88630 Pfullendorf
Tel.: +49 (0) 7552 9288 -0
Fax: +49 (0) 7552 9288 -49

Diese Zeichnung darf ohne unsere ausdrückliche Genehmigung weder vervielfältigt, noch dritten Personen oder Mitbewerbern im Original oder als Kopie ausgehändigt werden. Eigentums- und Urheberrecht vorbehalten.

	date	name
User		Inzschwn
Proved	20.06.2016	Inzkraum
Reading station		

Power outlet 12 V power outlet

Mat. -Nr. 1000364531

Doc. -Nr. 2060093317

Revision	03
Ersetzt Version	02
Gewicht in [kg]	

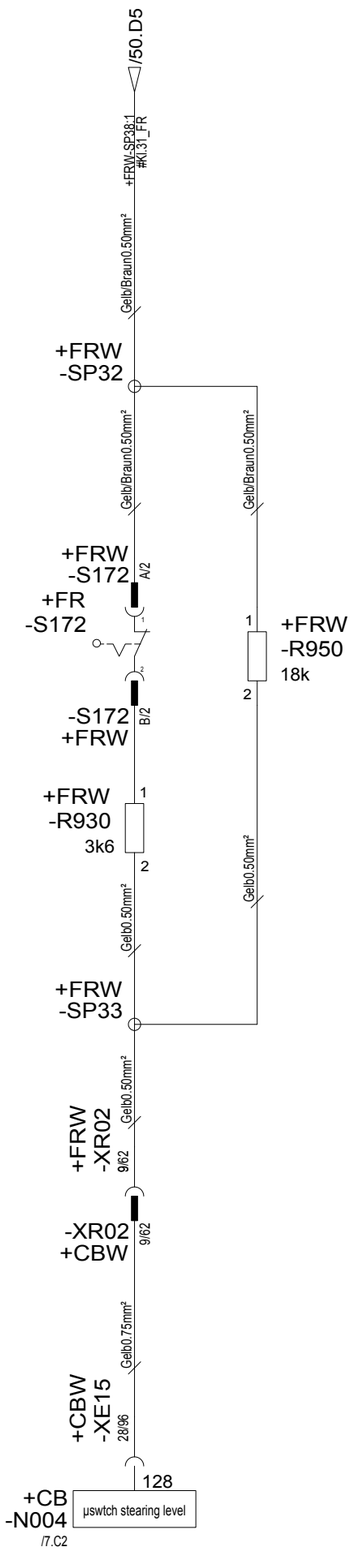

KRAMER
Kramer Werke GmbH
Wacker Neuson Straße 1 / D- 88630 Pfullendorf
Tel.: +49 (0) 7552 9288 -0
Fax: +49 (0) 7552 9288 -49

Diese Zeichnung darf ohne unsere ausdrückliche Genehmigung weder vervielfältigt, noch dritten Personen oder Mitbewerbern im Original oder als Kopie ausgehändigt werden. Eigentums- und Urheberrecht vorbehalten.

	date	name
User		Inzschwn
Proved	20.06.2016	Inzkraum
Reading station		

Steering mode switch

Mat. -Nr. 1000364531

Doc. -Nr. 2060093317

Revision	03
Ersetzt Version	02
Gewicht in [kg]	

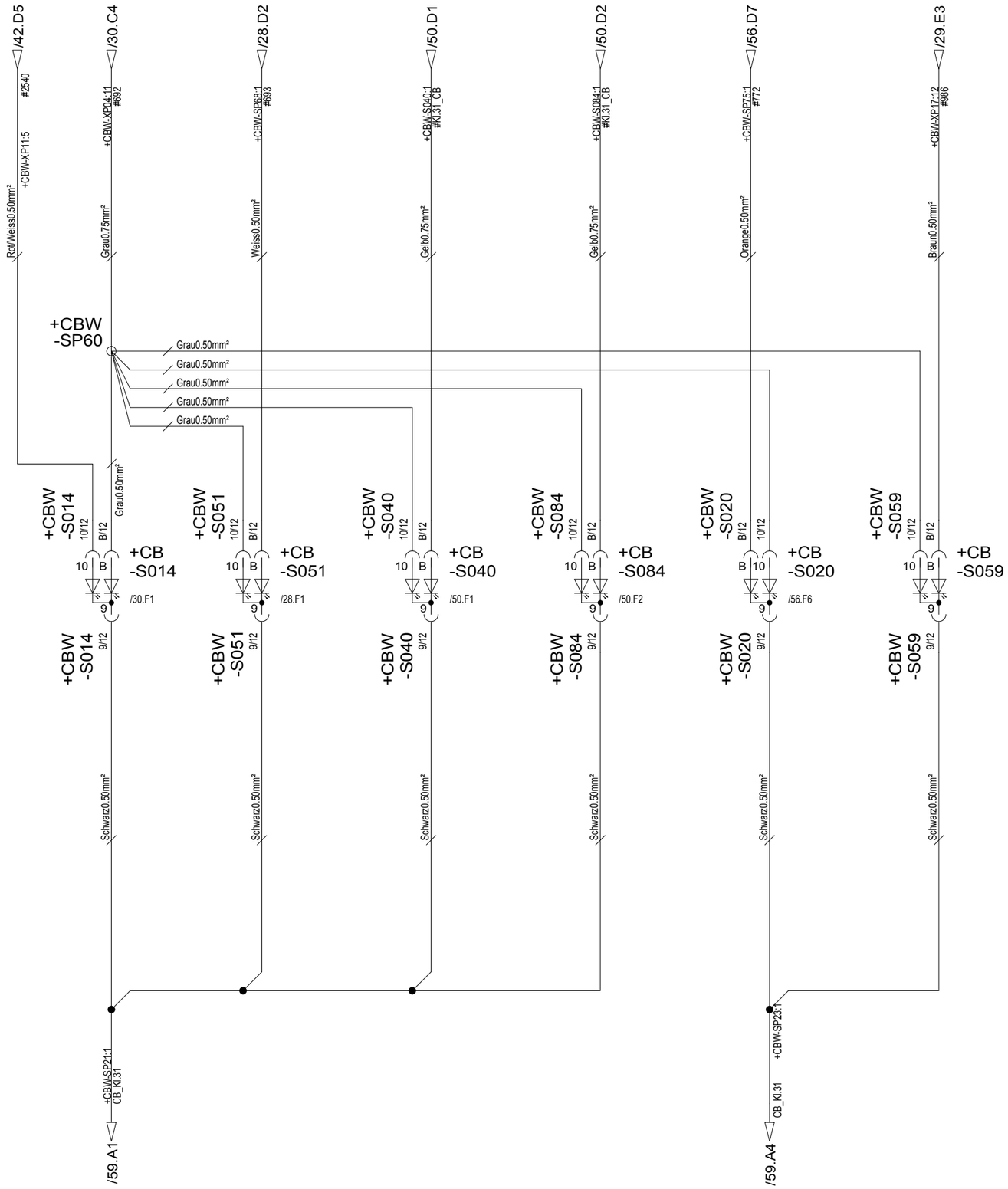

KRAMER
Kramer Werke GmbH
Wacker Neuson Straße 1 / D- 88630 Pfullendorf
Tel.: +49 (0) 7552 9288 -0
Fax: +49 (0) 7552 9288 -49

Diese Zeichnung darf ohne unsere ausdrückliche Genehmigung weder vervielfältigt, noch dritten Personen oder Mitbewerbern im Original oder als Kopie ausgehändigt werden. Eigentums- und Urheberrecht vorbehalten.

	date	name
User		Inzschwn
Proved	20.06.2016	Inzkraum
Reading station		

switch illumination

Mat. -Nr. 1000364531

Doc. -Nr. 2060093317

Revision	03
Ersetzt Version	02
Gewicht in [kg]	

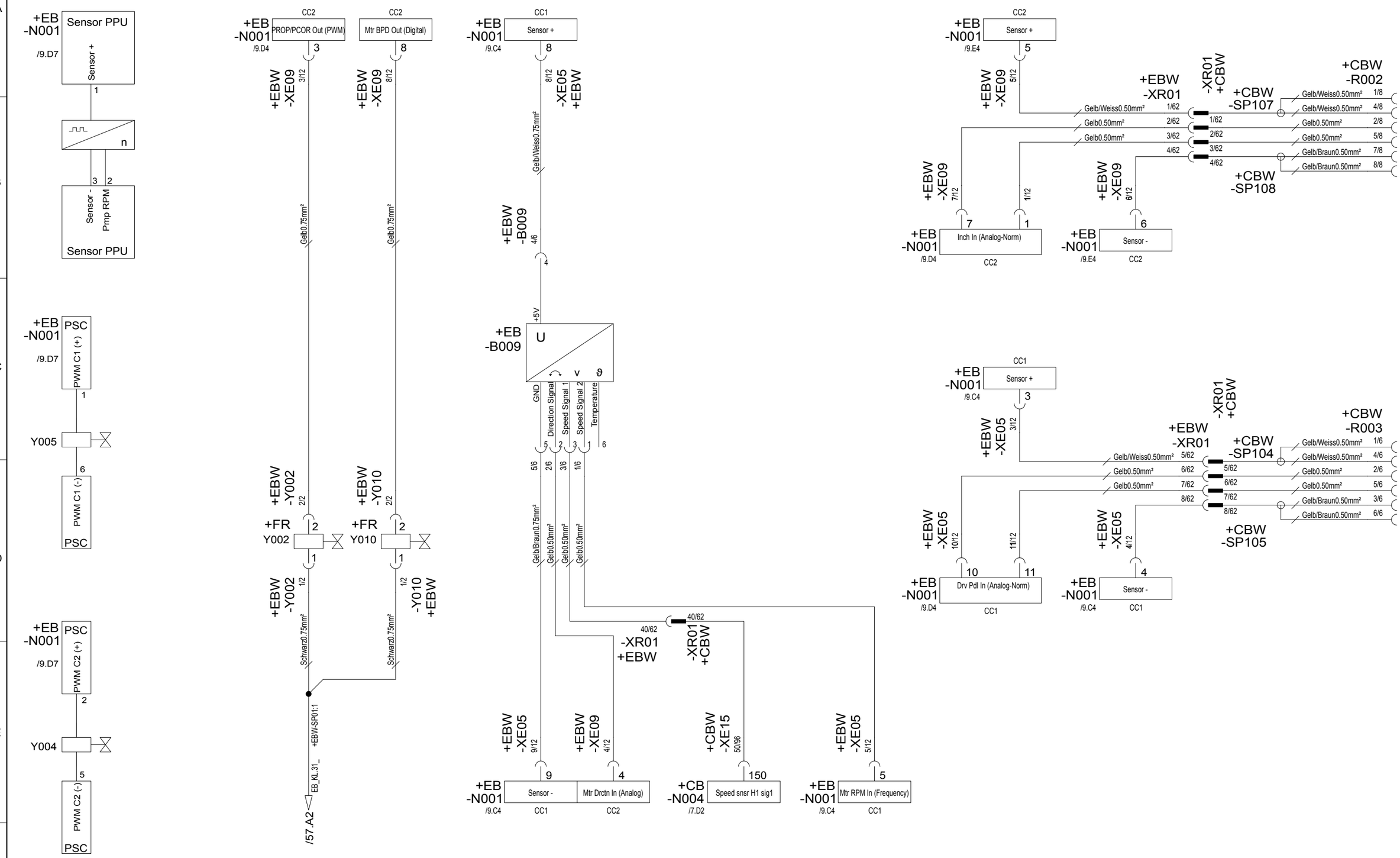

KRAMER
Kramer Werke GmbH
Wacker Neuson Straße 1 / D- 88630 Pfullendorf
Tel.: +49 (0) 7552 9288 -0
Fax: +49 (0) 7552 9288 -49

Diese Zeichnung darf ohne unsere ausdrückliche Genehmigung weder vervielfältigt, noch dritten Personen oder Mitbewerbern im Original oder als Kopie ausgehändigt werden. Eigentums- und Urheberrecht vorbehalten.

	date	name
User		Inzschwn
Proved	20.06.2016	Inzkraum
Reading station		

Travelling drive

Mat.-Nr. 1000364531 Doc.-Nr. 2060093317

Revision	03
Ersetzt Version	02
Gewicht in [kg]	

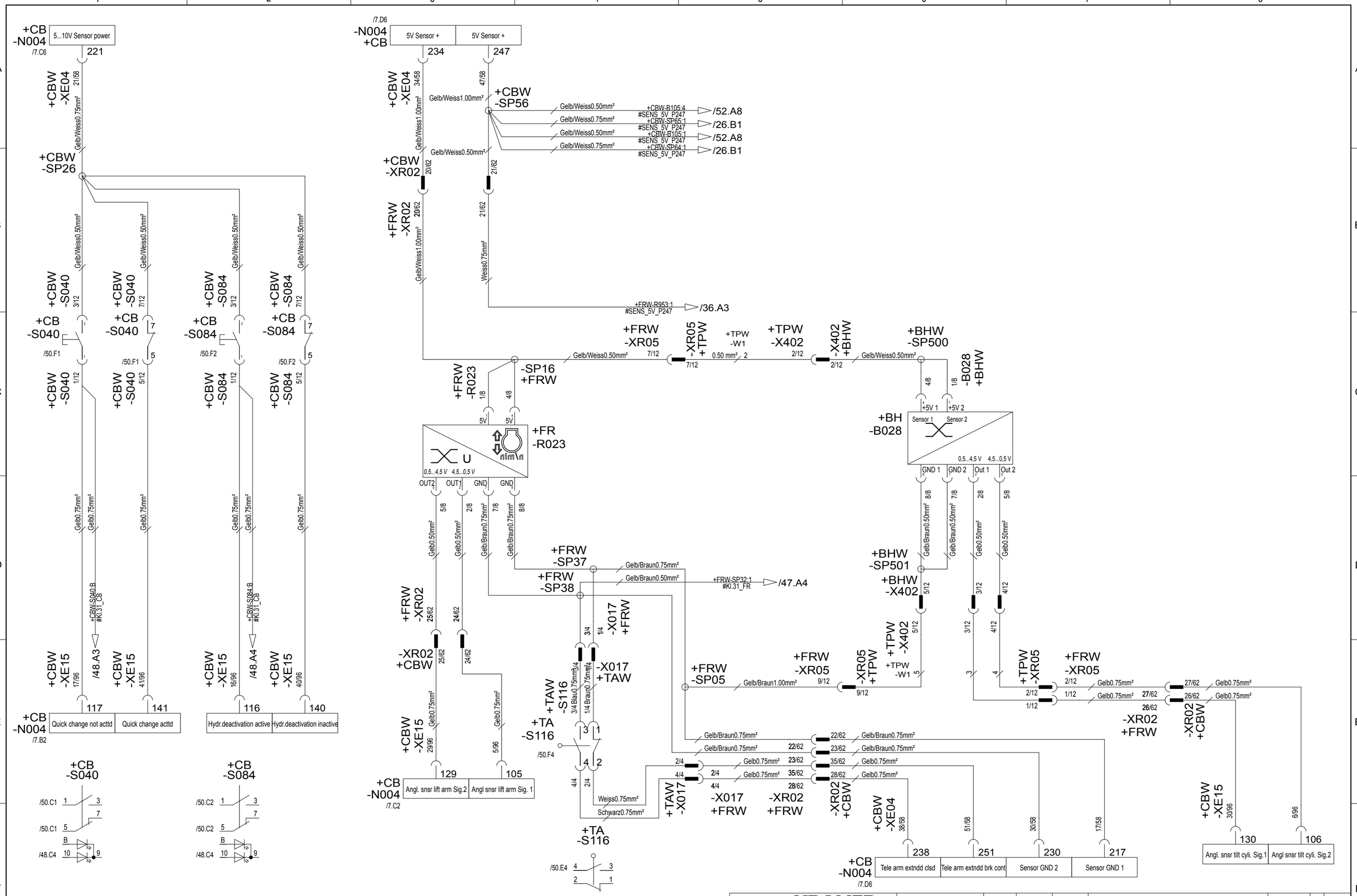

KRAMER
Kramer Werke GmbH
Wacker Neuson Straße 1 / D- 88630 Pfullendorf
Tel.: +49 (0) 7552 9288 -0
Fax: +49 (0) 7552 9288 -49

Diese Zeichnung darf ohne unsere ausdrückliche Genehmigung weder vervielfältigt, noch dritten Personen oder Mitbewerbern im Original oder als Kopie ausgehändigt werden. Eigentums- und Urheberrecht vorbehalten.

	date	name
User		Inzschwn
Proved	20.06.2016	Inzkraum
Reading station		

Sensor Telescopic boom

Mat.-Nr. 1000364531 Doc.-Nr. 2060093317

Revision	03
Ersetzt Version	02
Gewicht in [kg]	

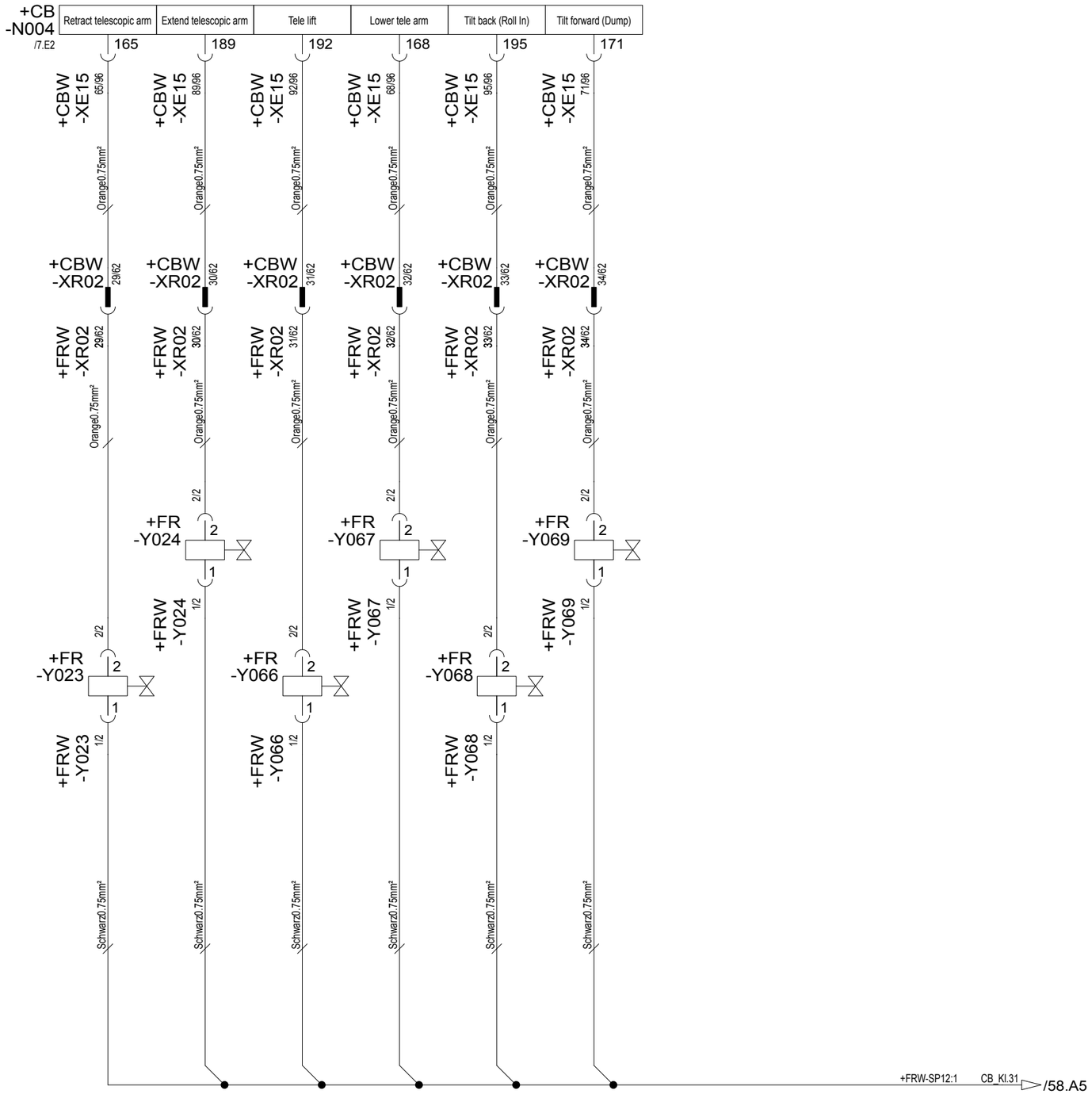

KRAMER
Kramer Werke GmbH
Wacker Neuson Straße 1 / D- 88630 Pfullendorf
Tel.: +49 (0) 7552 9288 -0
Fax: +49 (0) 7552 9288 -49

Diese Zeichnung darf ohne unsere ausdrückliche Genehmigung weder vervielfältigt, noch dritten Personen oder Mitbewerbern im Original oder als Kopie ausgehändigt werden. Eigentums- und Urheberrecht vorbehalten.

	date	name
User		Inzschwn
Proved	20.06.2016	Inzkraum
Reading station		

valve Telescopic boom

Mat. -Nr. 1000364531

Doc. -Nr. 2060093317

Revision	03
Ersetzt Version	02
Gewicht in [kg]	

A3

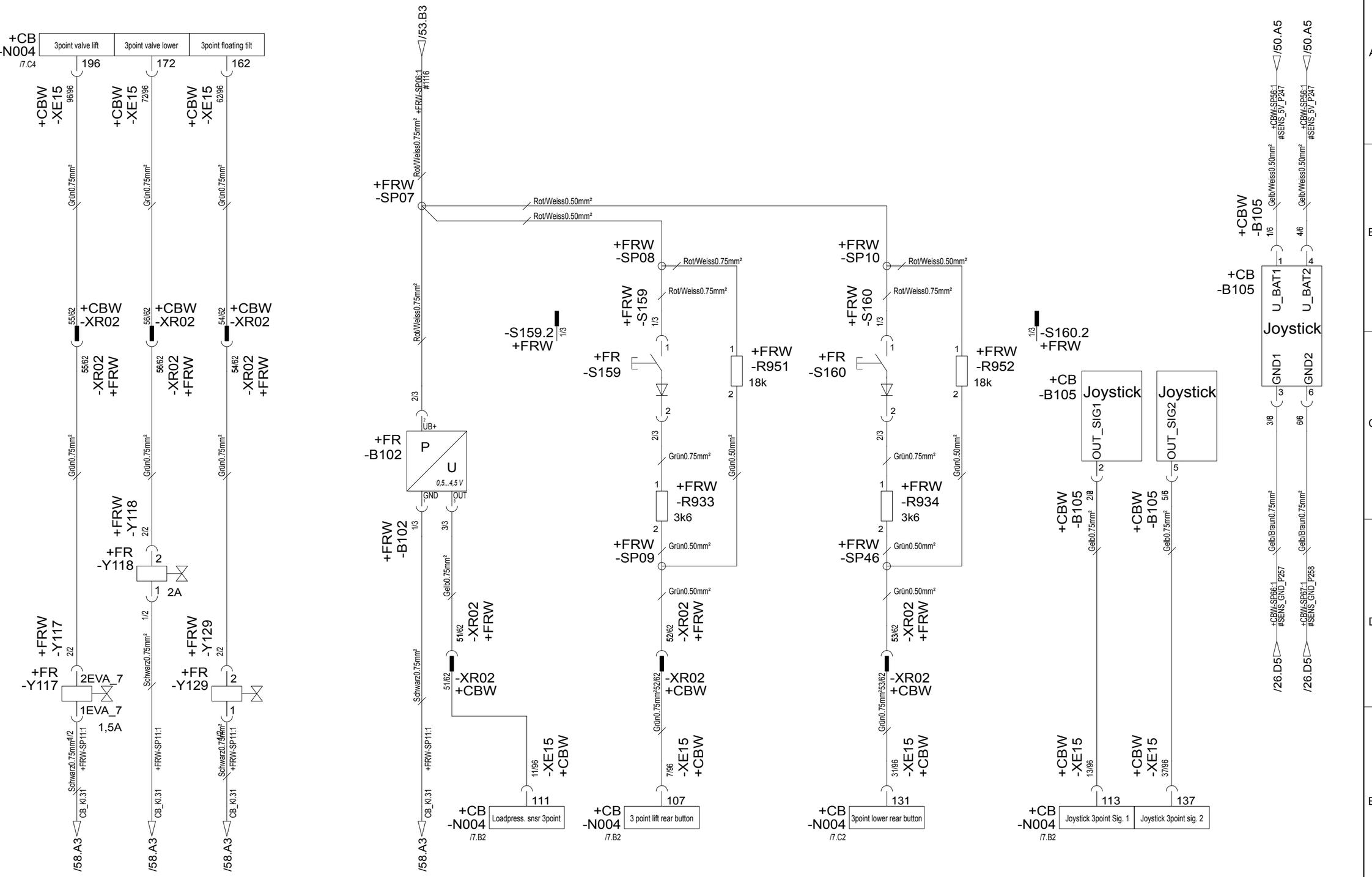

KRAMER
Kramer Werke GmbH
Wacker Neuson Straße 1 / D- 88630 Pfullendorf
Tel.: +49 (0) 7552 9288 -0
Fax: +49 (0) 7552 9288 -49

Diese Zeichnung darf ohne unsere ausdrückliche Genehmigung weder vervielfältigt, noch dritten Personen oder Mitbewerbern im Original oder als Kopie ausgehändigt werden. Eigentums- und Urheberrecht vorbehalten.

	date	name
User		Inzschwn
Proved	20.06.2016	Inzkraum
Reading station		

Rear three-point power lift

Mat.-Nr. 1000364531 Doc.-Nr. 2060093317

Revision	03
Ersetzt Version	02
Gewicht in [kg]	

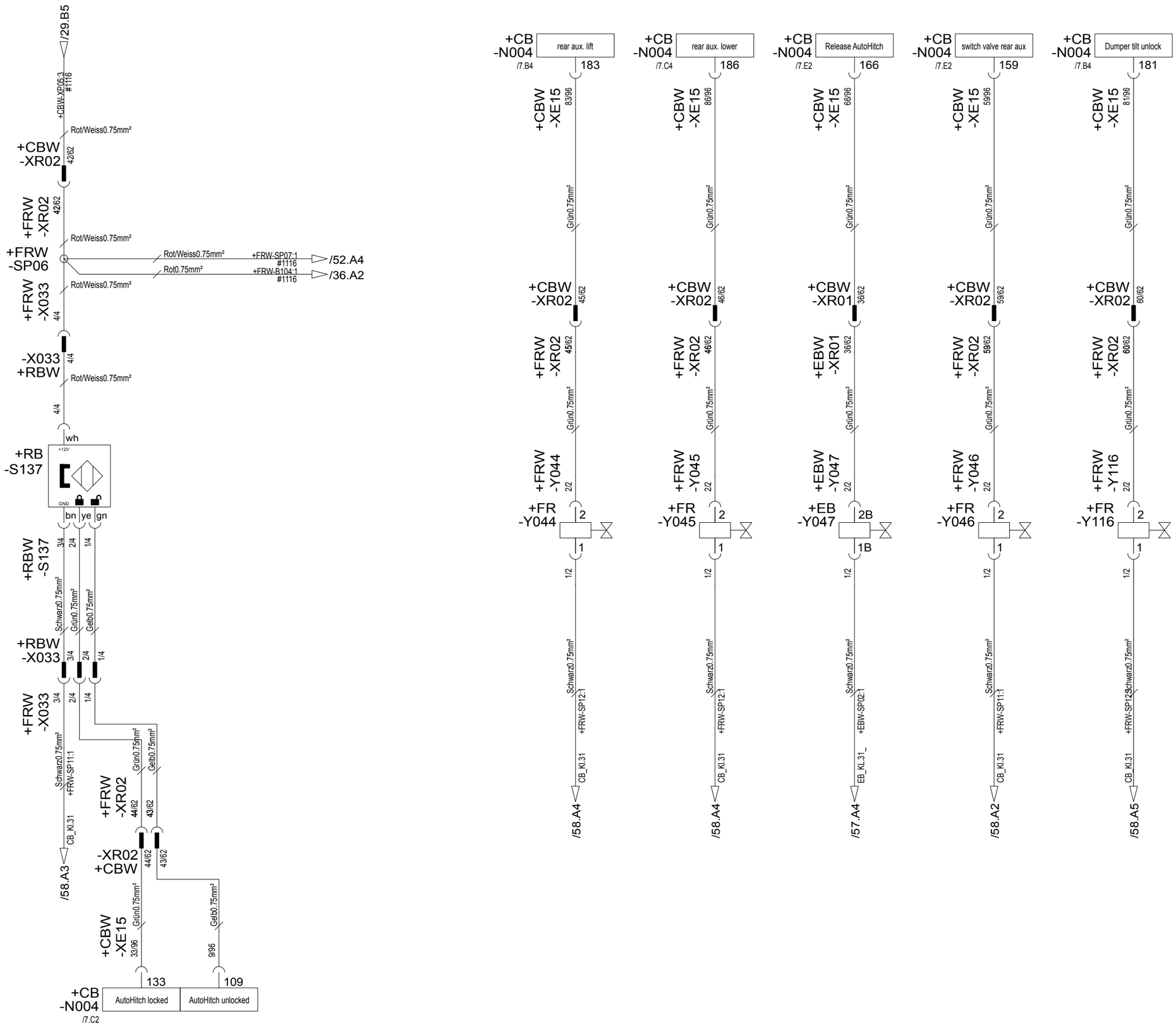

KRAMER
Kramer Werke GmbH
Wacker Neuson Straße 1 / D- 88630 Pfullendorf
Tel.: +49 (0) 7552 9288 -0
Fax: +49 (0) 7552 9288 -49

Diese Zeichnung darf ohne unsere ausdrückliche Genehmigung weder vervielfältigt, noch dritten Personen oder Mitbewerbern im Original oder als Kopie ausgehändigt werden. Eigentums- und Urheberrecht vorbehalten.

	date	name
User		Inzschwn
Proved	20.06.2016	Inzkraum
Reading station		

Autohitch trailer coupling

Mat.-Nr. 1000364531

Doc.-Nr. 2060093317

Revision	03
Ersetzt Version	02
Gewicht in [kg]	

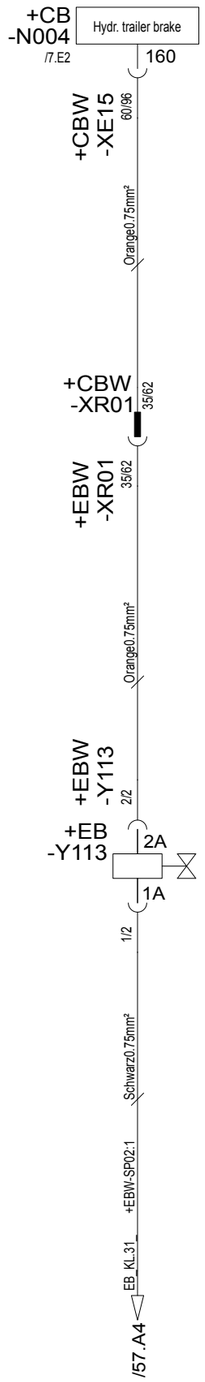

KRAMER
Kramer Werke GmbH
Wacker Neuson Straße 1 / D- 88630 Pfullendorf
Tel.: +49 (0) 7552 9288 -0
Fax: +49 (0) 7552 9288 -49

Diese Zeichnung darf ohne unsere ausdrückliche Genehmigung weder vervielfältigt, noch dritten Personen oder Mitbewerbern im Original oder als Kopie ausgehändigt werden. Eigentums- und Urheberrecht vorbehalten.

	date	name
User		Inzschwn
Proved	20.06.2016	Inzkraum
Reading station		

Trailer brake

Mat.-Nr. 1000364531

Doc.-Nr. 2060093317

Revision	03
Ersetzt Version	02
Gewicht in [kg]	

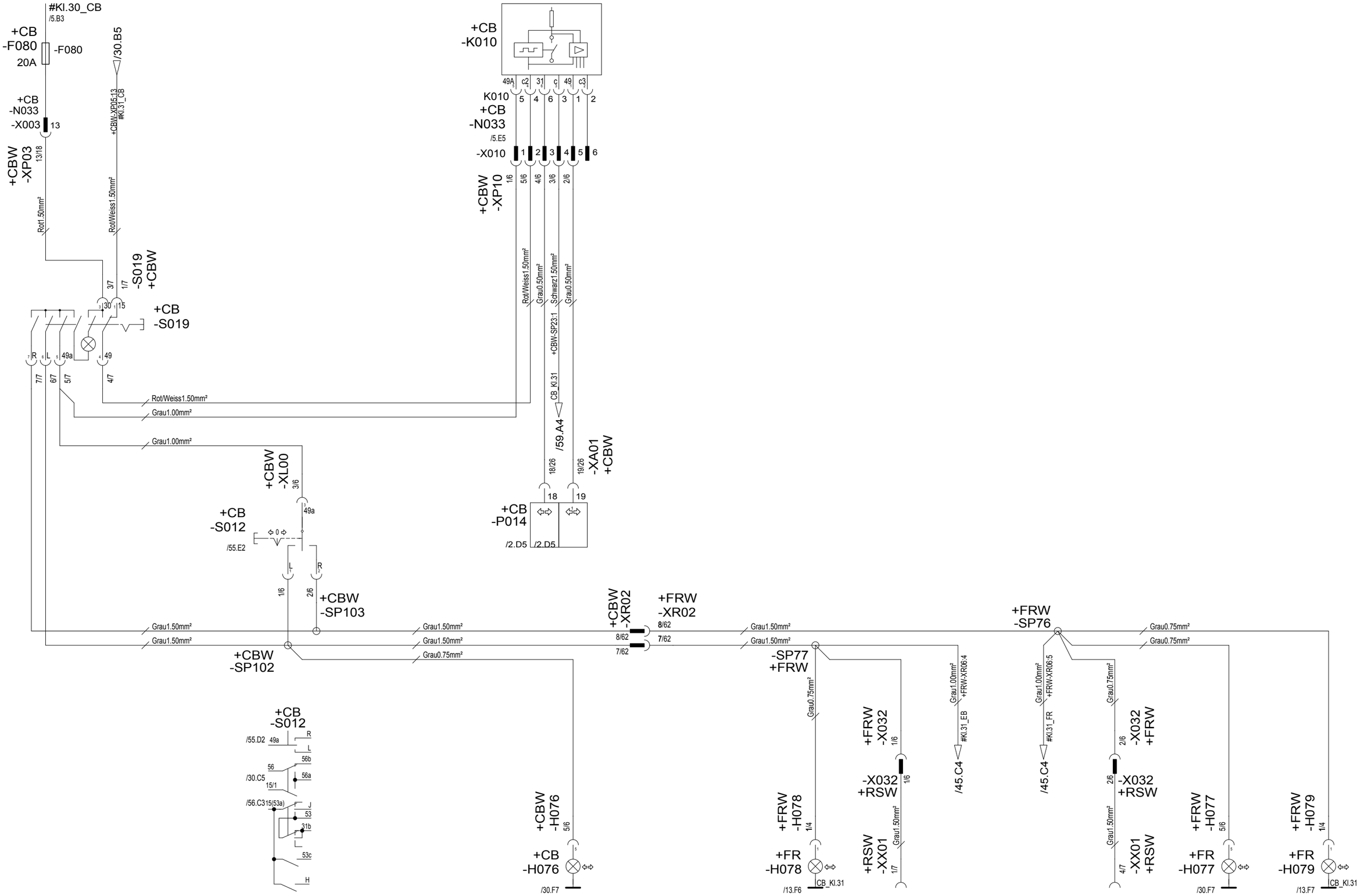

KRAMER
Kramer Werke GmbH
Wacker Neuson Straße 1 / D- 88630 Pfullendorf
Tel.: +49 (0) 7552 9288 -0
Fax: +49 (0) 7552 9288 -49

Diese Zeichnung darf ohne unsere ausdrückliche Genehmigung weder vervielfältigt, noch dritten Personen oder Mitbewerbern im Original oder als Kopie ausgehändigt werden. Eigentums- und Urheberrecht vorbehalten.

	date	name
User		Inzschwn
Proved	20.06.2016	Inzkraum
Reading station		

Turn indicator system

Mat.-Nr. 1000364531

Doc.-Nr. 2060093317

Revision	03
Ersetzt Version	02
Gewicht in [kg]	

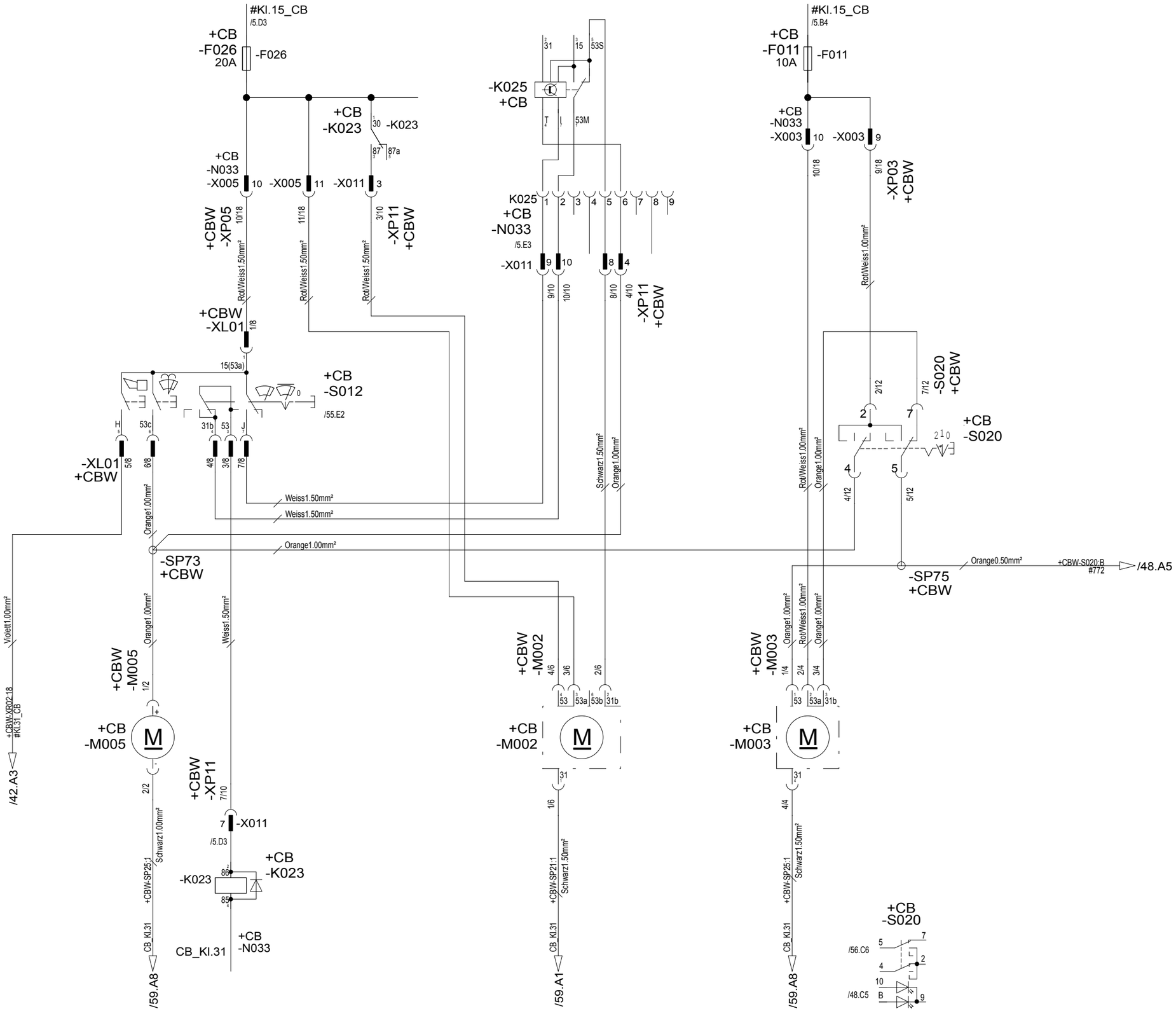

KRAMER
Kramer Werke GmbH
Wacker Neuson Straße 1 / D- 88630 Pfullendorf
Tel.: +49 (0) 7552 9288 -0
Fax: +49 (0) 7552 9288 -49

Diese Zeichnung darf ohne unsere ausdrückliche Genehmigung weder vervielfältigt, noch dritten Personen oder Mitbewerbern im Original oder als Kopie ausgehändigt werden. Eigentums- und Urheberrecht vorbehalten.

	date	name
User		Inzschwn
Proved	20.06.2016	Inzkraum
Reading station		

Wiper system

Mat.-Nr. 1000364531

Doc.-Nr. 2060093317

Revision	03
Ersetzt Version	02
Gewicht in [kg]	

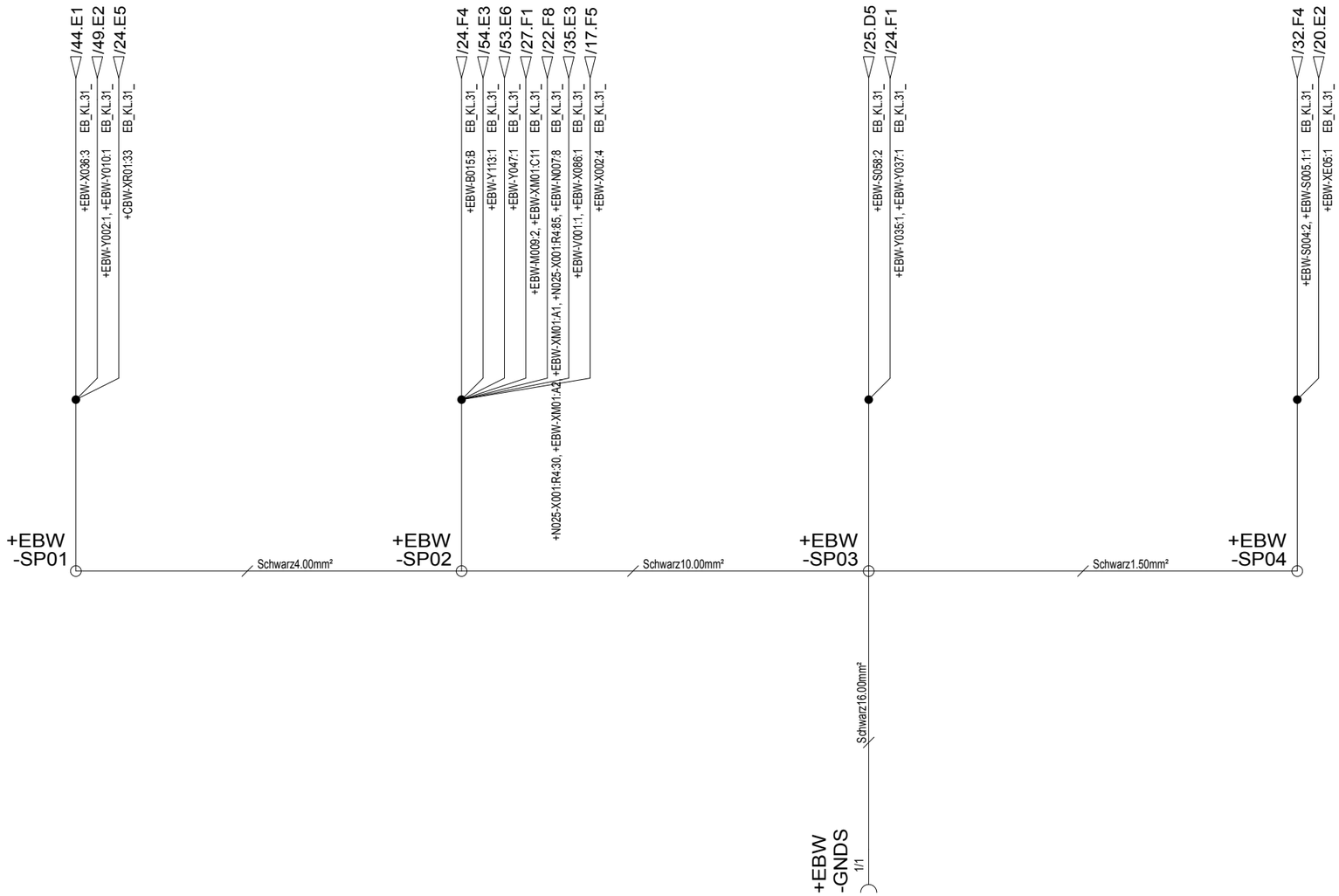

KRAMER
Kramer Werke GmbH
Wacker Neuson Straße 1 / D- 88630 Pfullendorf
Tel.: +49 (0) 7552 9288 -0
Fax: +49 (0) 7552 9288 -49

Diese Zeichnung darf ohne unsere ausdrückliche Genehmigung weder vervielfältigt, noch dritten Personen oder Mitbewerbern im Original oder als Kopie ausgehändigt werden. Eigentums- und Urheberrecht vorbehalten.

	date	name
User		Inzkraum
Proved	20.06.2016	Inzkraum
Reading station		

Earth Splice EBW

Revision	03
Ersetzt Version	02
Gewicht in [kg]	

Mat. -Nr. 1000364531 Doc. -Nr. 2060093317

A3

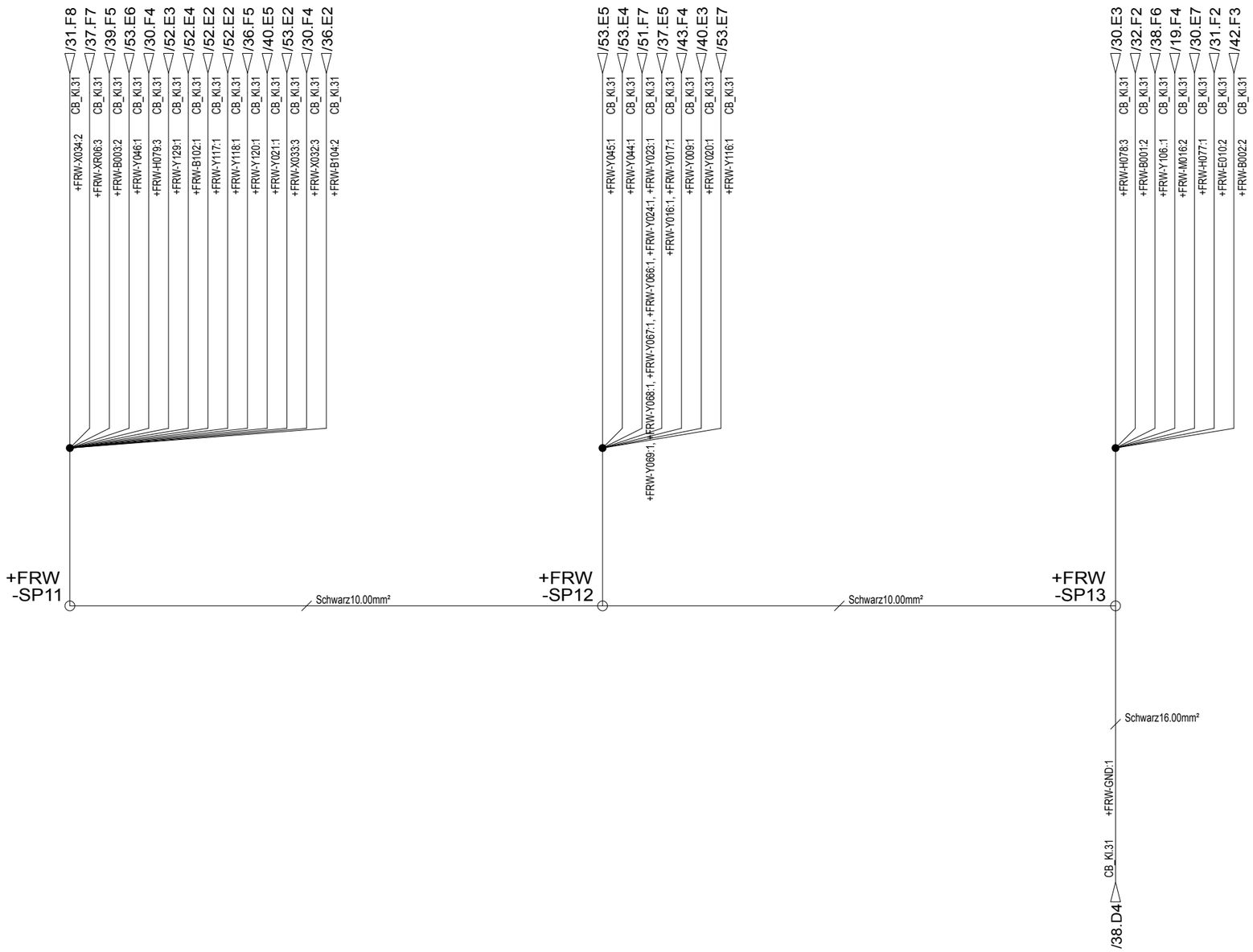

KRAMER
Kramer Werke GmbH
Wacker Neuson Straße 1 / D- 88630 Pfullendorf
Tel.: +49 (0) 7552 9288 -0
Fax: +49 (0) 7552 9288 -49

Diese Zeichnung darf ohne unsere ausdrückliche Genehmigung weder vervielfältigt, noch dritten Personen oder Mitbewerbern im Original oder als Kopie ausgehändigt werden. Eigentums- und Urheberrecht vorbehalten.

	date	name
User		Inzkraum
Proved	20.06.2016	Inzkraum
Reading station		

Earth Splice FRW

Mat. -Nr. 1000364531

Doc. -Nr. 2060093317

Revision	03
Ersetzt Version	02
Gewicht in [kg]	

A3

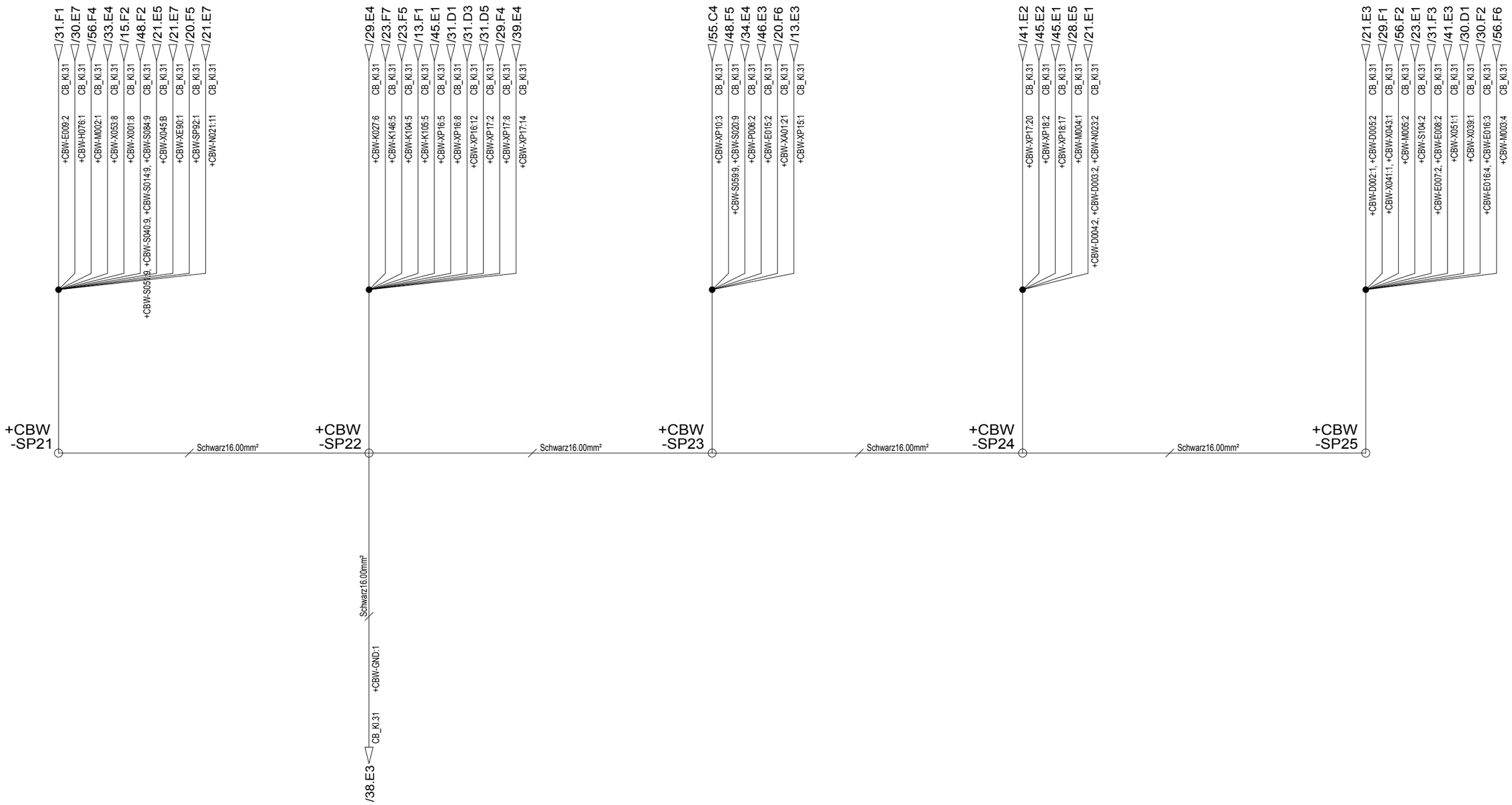

KRAMER
Kramer Werke GmbH
Wacker Neuson Straße 1 / D- 88630 Pfullendorf
Tel.: +49 (0) 7552 9288 -0
Fax: +49 (0) 7552 9288 -49

Diese Zeichnung darf ohne unsere ausdrückliche Genehmigung weder vervielfältigt, noch dritten Personen oder Mitbewerbern im Original oder als Kopie ausgehändigt werden. Eigentums- und Urheberrecht vorbehalten.

	date	name
User		lnzkraum
Proved	20.06.2016	lnzkraum
Reading station		

Earth Splice CBW

Mat. -Nr. 1000364531

Doc. -Nr. 2060093317

Revision	03
Ersetzt Version	02
Gewicht in [kg]	

A3

BMK	Ort	Position	Identifier_Text	SAP_ArticleNumber
-A001	+CB	/33.C3	Radio	1000263879
B018	+CB	/5.D2	Main board (fuses & relays)	1000335043
-B001	+FR	/32.D2	Fuel gauge	1000243559
-B001	+FRW	/32.D2	Plug connector Fuel gauge	1000027438
-B002	+FR	/42.D3	Horn	1000269368
-B002	+FRW	/42.D3	Plug connector Horn	1000027438
-B003	+FR	/39.E5	Reversing warning system	1000027045
-B003	+FRW	/39.D5	Plug connector Reversing warning system	1000000464
-B008	+FR	/34.C1	Load sensor – strain gage	1000317698
-B008	+FRW	/34.D1	Plug connector Load sensor – strain gage	1000027429
-B009	+EB	/49.B3	Engine speed sensor Hydraulic motor	1000305506
-B009	+EBW	/49.D4	Plug connector Engine speed sensor Hydraulic motor	1000183226
-B011	+CB	/33.E2	speaker	1000029659
-B012	+CB	/33.E3	speaker	1000029659
-B015	+EBW	/24.D3	Plug connector Coolant level sensor	1000027429
-B015	+EN	/24.D3	Coolant level sensor	1000189283
-B016	+EBW	/24.C6	Plug connector Temperature sensor Hydraulic oil	1000027332
-B016	+EN	/24.D6	Temperature sensor Hydraulic oil Radiator fan	1000336644
-B018	+CB	/42.E4	Buzzer	1000322070
-B028	+BH	/50.D6	Angle transmitter Tilt cylinder	1000300036
-B028	+BHW	/50.C6	Plug connector Angle transmitter Tilt cylinder	1000262118
-B086	+FR	/14.B4	Rear camera	1000315902
-B087	+FR	/14.B5	Front camera	1000310478
-B102	+FR	/52.C4	Rear three-point linkage load pressure sensor	1000282161
-B102	+FRW	/52.D4	Plug connector Rear three-point linkage load pressure sensor	1000277498
-B104	+FR	/36.C2	Engine speed sensor PTO shaft CAN	1000335339
-B104	+FRW	/36.C2	Plug connector Engine speed sensor PTO shaft	1000337881
-B104.1	+FRW	/36.C2	Pin housing Engine speed sensor PTO shaft	1000085023
-B105	+CB	/52.C8	Potentiometer Three-point Rear linkage	1000335340
-B105	+CBW	/52.B8	Plug connector Potentiometer Rear linkage	1000238088
-D002	+CB0	/21.D4	Joystick with Control electronics	1000349290

KRAMER
Kramer Werke GmbH
Wacker Neuson Straße 1 / D- 88630 Pfullendorf
Tel.: +49 (0) 7552 9288 -0
Fax: +49 (0) 7552 9288 -49

Diese Zeichnung darf ohne unsere ausdrückliche Genehmigung weder vervielfältigt, noch dritten Personen oder Mitbewerbern im Original oder als Kopie ausgehändigt werden. Eigentums- und Urheberrecht vorbehalten.

	date	name
User		Inzkraum
Proved		
Reading station		

Betriebsmittelverzeichnis
-

Mat. -Nr. 1000364531 Doc. -Nr. 2060093317

Revision
Ersetzt Version
Gewicht in [kg]

BMK_01/105

A3

BMK	Ort	Position	Identifier_Text	SAP_ArticleNumber
-D002	+CBW	/21.D4	Plug connector Joystick	1000027431
-D003	+CB0	/21.D1	CAN Keypad 1	1000335104
-D003	+CBW	/21.C1	Plug connector CAN Keypad 1	1000104286
-D004	+CB1	/21.D2	CAN Keypad 2	1000335105
-D004	+CB2	/21.D2	CAN Keypad 2	1000335107
-D004	+CBW	/21.C2	Plug connector CAN Keypad 2	1000104286
-D005	+CB0	/21.D3	CAN Keypad 3.3	1000335110
-D005	+CB1	/21.D3	CAN Keypad 3.2	1000335109
-D005	+CB2	/21.D3	CAN Keypad 3.1	1000335108
-D005	+CBW	/21.C3	Plug connector CAN Keypad 3	1000104286
-D+	+EBW	/21.A7	Dynamo positive	1000050024
-E007	+CB0	/31.D3	Rear working light left	1000270919
-E007	+CBW	/31.D3	Plug connector Rear working light left	1000270365
-E008	+CB0	/31.D4	Rear working light right	1000270919
-E008	+CBW	/31.D4	Plug connector Rear working light right	1000270365
-E009	+CB0	/31.D1	Front working light left	1000270919
-E009	+CBW	/31.D1	Plug connector Front working light left	1000270365
-E010	+FR0	/31.D2	Front working light right	1000270919
-E010	+FRW	/31.D2	Plug connector Front working light right	1000270365
-E012	+TA0	/31.D7	Working head lamps Telescopic boom	1000270919
-E012	+TAW	/31.D7	Plug connector Working head lamps Telescopic boom	1000270365
-E013	+TA0	/31.D7	Working head lamps Telescopic boom	1000270919
-E013	+TAW	/31.D7	Plug connector Working head lamps Telescopic boom	1000270365
-E014	+CB	/30.C1	Interior light	1000051952
-E015	+CB	/46.D3	12 V power outlet	1000187512
-E015	+CBW	/46.C3	Plug connector 12 V power outlet	1000095323
-E016	+CB	/30.C2	License plate	1000283787
-E016	+CBW	/30.C2	Plug connector License plate	1000104286
-E016.1	+CB	/30.C2	License plate	1000283787
-F001	+N025	/35.A5	fuse 100A	1000191490
-F002	+N025	/35.A6	fuse 100A	1000191490

KRAMER
Kramer Werke GmbH
Wacker Neuson Straße 1 / D- 88630 Pfullendorf
Tel.: +49 (0) 7552 9288 -0
Fax: +49 (0) 7552 9288 -49

Diese Zeichnung darf ohne unsere ausdrückliche Genehmigung weder vervielfältigt, noch dritten Personen oder Mitbewerbern im Original oder als Kopie ausgehändigt werden. Eigentums- und Urheberrecht vorbehalten.

	date	name
User		Inzkraum
Proved		
Reading station		

Betriebsmittelverzeichnis
-

Mat. -Nr. 1000364531 Doc. -Nr. 2060093317

Revision
Ersetzt Version
Gewicht in [kg]

A3

BMK	Ort	Position	Identifier_Text	SAP_ArticleNumber
-F004	+N025	/27.B1	fuse 15A fuel pump	1000186028
-F005	+N025	/27.B3	fuse 20A motor control	1000186029
-F006	+N025	/20.B3	fuse 5A motor control	1000186026
-F007	+CB	/21.A7	fuse 3A Immobiliser	1000085680
-F009	+CB	/33.A3	fuse 7.5A Radio	1000095374
-F010	+CB	/21.A4	fuse 3A Joystick	1000085680
-F011	+CB	/56.A6	fuse 10A Rear wiper motor	1000085682
-F012	+CB	/46.A3	fuse 12A 12 V power outlet	1000085683
-F013	+CB	/24.A3	fuse 5A Safe load indicator, Coolant level sensor	1000052490
-F014	+CB	/13.A2	fuse 5A Handbrake switch, Load stabiliser, Operator presence switch	1000052490
-F015	+CB	/41.A3	fuse 7.5A Rotating beacon	1000095374
-F016	+CB	/30.A1	fuse 20A Light switch	1000085684
-F017	+CB	/30.A2	fuse 10A Side marker light left	1000085682
-F018	+CB	/30.A4	fuse 10A Side marker light right	1000085682
-F019	+CB	/30.A7	fuse 7.5A Low beam left	1000095374
-F020	+CB	/30.A7	fuse 7.5A Low beam right	1000095374
-F021	+CB	/30.A8	fuse 7.5A High beam left	1000095374
-F022	+CB	/30.A8	fuse 7.5A High beam right	1000095374
-F023	+CB	/20.A6	fuse 3A Display and Buzzer	1000085680
-F024	+CB	/21.A5	fuse 3A Immobiliser and Camera	1000085680
-F025	+CB	/30.A5	fuse 20A Light switch	1000085684
-F026	+CB	/56.A3	fuse 20A Horn and Front wiper motor	1000085684
-F027	+CB	/13.A5	fuse 10A Brake lights	1000085682
-F028	+CB	/29.A4	fuse 3A Window heating and Autohitch	1000085680
-F029	+CB	/31.A1	fuse 15A Front working light	1000085683
-F030	+CB	/31.A3	fuse 15A Rear working light	1000085683
-F031	+CB	/20.A7	fuse 5A motor control, diagnostics, Telematics module	1000052490
-F032	+CB	/21.A1	fuse 5A Keypad, Jog dial, Joystick	1000052490
-F033	+CB	/31.A5	fuse 15A Working head lamps Telescopic boom	1000085683
-F034	+CB	/45.A2	fuse 15A Front power outlet	1000085683
-F035	+CB	/28.A1	fuse 25A heating, Air conditioning	1000085685

KRAMER
Kramer Werke GmbH
Wacker Neuson Straße 1 / D- 88630 Pfullendorf
Tel.: +49 (0) 7552 9288 -0
Fax: +49 (0) 7552 9288 -49

Diese Zeichnung darf ohne unsere ausdrückliche Genehmigung weder vervielfältigt, noch dritten Personen oder Mitbewerbern im Original oder als Kopie ausgehändigt werden. Eigentums- und Urheberrecht vorbehalten.

	date	name
User		Inzkraum
Proved		
Reading station		

Betriebsmittelverzeichnis
-

Mat. -Nr. 1000364531 Doc. -Nr. 2060093317

Revision
Ersetzt Version
Gewicht in [kg]

A3

BMK	Ort	Position	Identifier_Text	SAP_ArticleNumber
-F036	+CB	/29.A1	fuse 30A Window heating	1000052491
-F037	+CB	/33.A2	fuse 7.5A Radio	1000095374
-F038	+CB	/23.A1	fuse 25A Operator seat	1000085685
-F040	+N025	/20.A4	fuse 80A Main controls	1000325756
-F041	+N025	/20.B2	fuse 15A Traction electronics	1000186028
-F042	+N025	/20.B2	fuse 10A Main controls	1000114140
-F043	+N025	/35.B3	fuse 7.5A Ignition and starting switch	1000186027
-F051	+N025	/27.B8	fuse 20A starter	1000186029
-F052	+N025	/27.C3	fuse 5A EGR valve	1000186026
-F059	+N025	/44.A1	fuse 30A Front power outlet 14-pole	1000325751
-F080	+CB	/55.A1	fuse 20A Hazard lights switch	1000085684
-F081	+CB	/20.A5	fuse 3A Main controls	1000085680
-F082	+N025	/38.A2	fuse 3A Pressure relief	1000186025
-F083	+N025	/22.B2	fuse Diesel particulate filter	1000186028
-F084	+N025	/19.B4	fuse 7.5A Central lubrication system	1000186027
-F086	+CBW	/20.D4	fuse 10A Main controls	1000114140
-F087	+CBW	/20.D4	fuse 10A Main controls	1000114140
-F088	+CBW	/20.D4	fuse 10A Main controls	1000114140
-F089	+CBW	/20.D4	fuse 10A Main controls	1000114140
-F090	+CBW	/20.D5	fuse 10A Main controls	1000114140
-F091	+CBW	/20.D5	fuse 10A Main controls	1000114140
-G001	+EBW	/25.E1	Contact generator	1000127092
-G002	+EB	/35.C1	Battery	1000301731
GND	+CB	/5.D2	Main board (fuses & relays)	1000335043
-GND	+CBW	/38.E3	Contact Earth	1000126891
-GND	+FRW	/38.D3	Contact Earth	1000126891
-GND1	+FRW	/38.D3	Contact Earth	1000126891
-GND2	+FRW	/38.E3	Contact Earth	1000126891
-GNDS	+EBW	/57.D5	Contact Earth	1000107757
-H028	+CB	/41.D3	Rotating beacon	1000155042
-H076	+CB	/30.F7	Combined front left light	1000276032

KRAMER
Kramer Werke GmbH
Wacker Neuson Straße 1 / D- 88630 Pfullendorf
Tel.: +49 (0) 7552 9288 -0
Fax: +49 (0) 7552 9288 -49

Diese Zeichnung darf ohne unsere ausdrückliche Genehmigung weder vervielfältigt, noch dritten Personen oder Mitbewerbern im Original oder als Kopie ausgehändigt werden. Eigentums- und Urheberrecht vorbehalten.

	date	name
User		Inzkraum
Proved		
Reading station		

Betriebsmittelverzeichnis
-

Mat. -Nr. 1000364531 Doc. -Nr. 2060093317

Revision
Ersetzt Version
Gewicht in [kg]

A3

BMK	Ort	Position	Identifier_Text	SAP_ArticleNumber
-H076	+CBW	/30.D7	Plug connector Combined front left light	1000027431
-H077	+FR	/30.F7	Combined front right light	1000276034
-H077	+FRW	/30.D7	Plug connector Combined front right light	1000027431
-H078	+FR	/30.D3	Combined rear left light	1000136352
-H078	+FRW	/55.E5	Plug connector Combined rear left light	1000104286
-H079	+FR	/30.D4	Combined rear right light	1000136352
-H079	+FRW	/55.E8	Plug connector Combined rear right light	1000104286
K010	+CB	/5.D2	Main board (fuses & relays)	1000335043
K025	+CB	/5.D2	Main board (fuses & relays)	1000335043
-K001	+EB	/35.F2	High-current relay	1000059162
-K003	+CB	/39.F4	Switching relays Machine travel Reverse	1000154043
-K007	+N025	/27.F4	High-current relay Start	1000125244
-K010	+CB	/55.A4	Turn indicator relay	1000339804
-K016	+CB	/45.F2	Switching relays Front power outlet	1000125244
-K016	+N032	/44.B6	relay Front power outlet 14-pole	1000125244
-K023	+CB	/56.E3	Switching relays Wiper Level 1	1000154043
-K023	+CB	/5.D2	Main board (fuses & relays)	1000335043
-K025	+CB	/56.A4	Intermittent-wipe relay	1000105146
-K027	+CB	/29.C4	Time lag relay 5 min	1000027088
-K027	+CBW		Relay pedestal Time lag relay 5 min	1000135648
-K030	+CB	/13.F5	relay Brake lights	1000125244
-K033	+CB	/29.F3	relay Rear window heating	1000125244
-K042	+N025	/27.F3	Switching relays Engine electronics	1000125244
-K047	+CB	/31.F3	Switching relays Working head lamps	1000125244
-K048	+CB	/31.F1	Switching relays Working head lamps	1000125244
-K049	+CB	/31.F5	Switching relays Working head lamps	1000125244
-K058	+CB	/5.D2	Main board (fuses & relays)	1000335043
-K088	+N025	/27.F5	Switching relays Diesel Feed pump	1000125244
-K095	+N032	/44.B3	relay Front power outlet 14-pole	1000125244
-K096	+N032	/44.B3	relay Front power outlet 14-pole	1000125244
-K097	+N032	/44.B4	relay Front power outlet 14-pole	1000125244

KRAMER
Kramer Werke GmbH
Wacker Neuson Straße 1 / D- 88630 Pfullendorf
Tel.: +49 (0) 7552 9288 -0
Fax: +49 (0) 7552 9288 -49

Diese Zeichnung darf ohne unsere ausdrückliche Genehmigung weder vervielfältigt, noch dritten Personen oder Mitbewerbern im Original oder als Kopie ausgehändigt werden. Eigentums- und Urheberrecht vorbehalten.

	date	name
User		Inzkraum
Proved		
Reading station		

Betriebsmittelverzeichnis
-

Mat. -Nr. 1000364531 Doc. -Nr. 2060093317

Revision
Ersetzt Version
Gewicht in [kg]

A3

BMK	Ort	Position	Identifier_Text	SAP_ArticleNumber
-K098	+N032	/44.B4	relay Front power outlet 14-pole	1000125244
-K100	+N032	/44.B5	relay Front power outlet 14-pole	1000125244
-K101	+CB	/45.F1	Switching relays Front power outlet Chute UP (E)	1000125244
-K101	+N032	/44.B5	relay Front power outlet 14-pole	1000125244
-K102	+CB	/45.F1	Switching relays Front power outlet Push button (J)	1000125244
-K102	+N032	/44.B6	relay Front power outlet 14-pole	1000125244
-K104	+CB	/23.E5	relay Start interlock Operator presence switch	1000125244
-K104	+CBW	/27.A6	Relay pedestal K104	1000114134
-K105	+CB	/13.E1	relay Start interlock Handbrake switch	1000125244
-K105	+CBW	/27.A7	Relay pedestal K105	1000114134
-K114	+CB	/41.F2	Rotating beacon	1000125244
-K137	+N025	/22.E3	relay Release Regeneration	1000125244
-K146	+CB	/23.E7	relay Start interlock Seat belt contact switch	1000125244
-K146	+CBW	/27.A7	Relay pedestal K106	1000114134
-M001	+EBW	/25.E2	Contact Alternator	1000127092
-M001.1	+EBW	/25.E2	Contact Alternator	1000050030
-M002	+CB	/56.D4	Front wiper motor	1000253075
-M002	+CBW	/56.E4	Plug connector Front wiper motor	1000187268
-M003	+CB	/56.D6	Rear wiper motor	1000284961
-M003	+CBW	/56.D6	Plug connector Rear wiper motor	1000176122
-M004	+CB	/28.D5	Fan	1000236669
-M004	+CBW	/28.D5	Plug connector Fan	1000095325
-M005	+CB	/56.D2	Front wipe/wash pump	1000168220
-M005	+CBW	/56.D2	Plug connector Front wipe/wash pump	1000095323
-M009	+EBW	/27.D2	Plug connector fuel pump	1000110449
-M016	+FRW	/19.D4	Plug connector Central lubrication system	1000027438
-M016.1	+FRW	/19.D4	Plug connector Central lubrication system	1000027445
N025	+EBW	/8.C3	Fuse box Engine bay	1000301696
-N001	+EB	/9.C2	Control valve H1 pump	1000248717
-N004	+CB	/7.B1	Main controls Cabin controller	1000334532
-N005	+EB	/3.A1	Diesel engine electronics	1000355046

KRAMER
Kramer Werke GmbH
Wacker Neuson Straße 1 / D- 88630 Pfullendorf
Tel.: +49 (0) 7552 9288 -0
Fax: +49 (0) 7552 9288 -49

Diese Zeichnung darf ohne unsere ausdrückliche Genehmigung weder vervielfältigt, noch dritten Personen oder Mitbewerbern im Original oder als Kopie ausgehändigt werden. Eigentums- und Urheberrecht vorbehalten.

	date	name
User		Inzkraum
Proved		
Reading station		

Betriebsmittelverzeichnis
-

Mat. -Nr. 1000364531 Doc. -Nr. 2060093317

Revision
Ersetzt Version
Gewicht in [kg]

A3

BMK	Ort	Position	Identifier_Text	SAP_ArticleNumber
-N007	+DP	/22.C2	Diesel particulate filter Kit	1000341215
-N007	+DPW	/22.C2	Dummy connector Plug connector Diesel particulate filter	1000105124
-N007	+EBW	/22.B2	Plug connector Diesel particulate filter	1000105122
-N007.1	+EBW	/22.B2	Pin housing Plug connector Diesel particulate filter	1000105124
-N021	+CB	/12.B4	Immobiliser	1000302412
-N021	+CBW	/27.B6	Plug connector Immobiliser	1000148271
-N023	+CB	/21.D3	HMI Jog dial	1000292611
-N023	+CBW	/21.C3	Plug connector HMI Jog dial	1000104286
-N025	+EBW	/8.C3	Fuse box Engine bay	1000301696
-N031	+CB	/10.C4	Camera system switchbox	1000315899
-N033	+CB	/5.D2	Main board (fuses & relays)	1000335043
-N034	+CB	/6.C3	Relay board	1000310922
-P006	+CB	/11.C3	Safe load indicator	1000339626
-P006	+CBW	/34.C4	Plug connector Safe load indicator	1000105113
-P014	+CB	/2.C3	Indicating instrument	
-P016	+CB	/14.B3	Screen Camera	
-R002	+CBW	/49.B8	Plug connector Inching potentiometer	1000262118
-R003	+CBW	/49.C8	Creep gear potentiometer	1000238088
-R006	+CB	/29.D1	Rear window heating	1000253068
-R009	+EB	/20.E8	Fuel preheater	1000336999
-R011	+CB	/26.D2	Accelerator pedal	1000166874
-R011	+CBW	/26.C2	Plug connector Accelerator pedal	1000166646
-R012	+CB	/26.D4	Manual throttle	1000282991
-R012	+CBW	/26.C4	Plug connector Manual throttle	1000238088
-R023	+FR	/50.D3	Angle transmitter Lifting arm monitoring	1000278176
-R023	+FRW	/50.C3	Plug connector Angle transmitter Lifting arm monitoring	1000262118
-R026	+CBW	/15.D3	Bus terminating resistance 120 Ohm	1000190317
-R027	+FRW	/18.D7	Bus terminating resistance 120 Ohm	1000278564
-R037	+EBW	/24.D6	Resistor module 100 Ohm	1000325407
-R046	+CB	/29.D2	Window heating page	1000253069
-R930	+FRW	/47.C4	Resistor 3k6	1000312305

KRAMER
Kramer Werke GmbH
Wacker Neuson Straße 1 / D- 88630 Pfullendorf
Tel.: +49 (0) 7552 9288 -0
Fax: +49 (0) 7552 9288 -49

Diese Zeichnung darf ohne unsere ausdrückliche Genehmigung weder vervielfältigt, noch dritten Personen oder Mitbewerbern im Original oder als Kopie ausgehändigt werden. Eigentums- und Urheberrecht vorbehalten.

	date	name
User		Inzkraum
Proved		
Reading station		

Betriebsmittelverzeichnis
-

Mat. -Nr. 1000364531 Doc. -Nr. 2060093317

Revision
Ersetzt Version
Gewicht in [kg]

A3

BMK	Ort	Position	Identifier_Text	SAP_ArticleNumber
-R933	+FRW	/52.C5	Resistor 3k6	1000312305
-R934	+FRW	/52.C6	Resistor 3k6	1000312305
-R935	+FRW	/36.C3	Resistor 3k6	1000312305
-R936	+CBW	/23.D5	Resistor 3k6	1000312305
-R950	+FRW	/47.C4	Resistor 18k	1000312306
-R951	+FRW	/52.C5	Resistor 18k	1000312306
-R952	+FRW	/52.C6	Resistor 18k	1000312306
-R953	+FRW	/36.C4	Resistor 18k	1000312306
-R954	+CBW	/23.C7	Resistor 18k	1000312306
-S001	+CB	/27.F6	Ignition and starting switch	1000333424
-S004	+EB		pressure switch Air filter	1000276951
-S004	+EBW	/32.D4	Plug connector pressure switch Air filter	1000027410
-S005	+EB	/32.D5	Pressure switch, hydraulic oil	1000051961
-S005	+EBW	/32.D5	Pressure switch, hydraulic oil	1000019583
-S005.1	+EBW	/32.E5	Pressure switch, hydraulic oil	1000019583
-S006	+EN	/24.D5	Temperature switch Hydraulic oil	1000027555
-S008	+EB	/35.D1	Battery master switch	1000288219
-S011	+CB	/13.D2	Handbrake switch	1000020275
-S011	+CBW	/13.D2	Plug connector Handbrake switch	1000105096
-S012	+CB	/55.E2	Steering-column control lever left	1000276751
-S014	+CB	/30.F1	Light switch	1000051958
-S014	+CBW	/30.B5	Plug connector Light switch	1000103949
-S015	+CB	/28.B1	switch heating	1000102987
-S015	+CBW	/28.B1	Plug connector switch heating	1000086664
-S019	+CB	/55.C1	Hazard lights switch	1000332615
-S019	+CBW	/55.B1	Plug connector Hazard lights switch	1000104430
-S020	+CB	/56.F6	switch Wiper/washer	1000098269
-S020	+CBW		Plug connector switch Wiper/washer	1000103949
-S040	+CB	/50.E1	button Quickhitch lock	1000051971
-S040	+CBW	/50.C1	Plug connector button Quickhitch lock	1000103949
-S045	+FR		Load stabiliser pressure switch	1000276818

KRAMER
Kramer Werke GmbH
Wacker Neuson Straße 1 / D- 88630 Pfullendorf
Tel.: +49 (0) 7552 9288 -0
Fax: +49 (0) 7552 9288 -49

Diese Zeichnung darf ohne unsere ausdrückliche Genehmigung weder vervielfältigt, noch dritten Personen oder Mitbewerbern im Original oder als Kopie ausgehändigt werden. Eigentums- und Urheberrecht vorbehalten.

	date	name
User		Inzkraum
Proved		
Reading station		

Betriebsmittelverzeichnis
-

Mat. -Nr. 1000364531 Doc. -Nr. 2060093317

Revision
Ersetzt Version
Gewicht in [kg]

A3

BMK	Ort	Position	Identifier_Text	SAP_ArticleNumber
-S045	+FRW	/40.C1	Plug connector Load stabiliser pressure switch	1000110449
-S051	+CB	/28.F1	switch Air conditioning	1000051959
-S051	+CBW	/28.C1	Plug connector switch Air conditioning	1000103949
-S052	+CB	/28.E4	pressure switch Air conditioning	1000153692
-S052	+CBW	/28.E4	Plug connector pressure switch Air conditioning	1000095325
-S054	+CBW	/28.D1	Temperature switch Air conditioning	1000095323
-S058	+EB	/25.C5	Water separator	
-S058	+EBW	/25.C5	Water separator	1000319047
-S059	+CB	/29.B4	button Rear window heating	1000051971
-S059	+CBW	/29.C4	Plug connector button Rear window heating	1000103949
-S084	+CB	/50.E2	switch Switch for bypassing overload cutoff Overload	1000051971
-S084	+CBW	/50.C2	Plug connector switch Switch for bypassing overload cutoff Overload	1000103949
-S104	+CB	/23.D1	Operator presence switch	1000292193
-S104	+CBW	/23.C1	Plug connector Operator presence switch	1000299131
-S116	+TA	/50.F4	limit switch Telescopic boom	1000268713
-S116	+TAW	/50.E4	Plug connector limit switch Telescopic boom	1000313479
-S123	+CB	/23.C5	Seat belt contact switch	1000347471
-S123	+CBW	/23.C5	Plug connector Seat belt contact switch	1000027429
-S127	+BH	/38.B5	switch Pressure relief	1000285667
-S127	+BHW		Plug connector switch Pressure relief	1000104430
-S137	+RB	/53.C2	position switch Autohitch	1000309246
-S137	+RBW	/53.D2	Plug connector position switch Autohitch	1000299530
-S159	+FR	/52.C5	Rear button Rear linkage Raise	1000335089
-S159	+FRW	/52.B5	Plug connector Rear button Rear linkage Raise	1000051989
-S159.2	+FRW	/52.C4		1000265293
-S160	+FR	/52.C6	Rear button Rear linkage Lower	1000335090
-S160	+FRW	/52.B6	Plug connector Rear button Rear linkage Lower	1000051989
-S160.2	+FRW	/52.C7		1000265293
-S172	+FR	/47.C4	switch Detected Crab steering	1000328962
-S172	+FRW	/47.C4	Plug connector switch Detected Crab steering	1000337537
-S175	+FR	/36.C3	Rear button PTO shaft	1000349209

KRAMER
Kramer Werke GmbH
Wacker Neuson Straße 1 / D- 88630 Pfullendorf
Tel.: +49 (0) 7552 9288 -0
Fax: +49 (0) 7552 9288 -49

Diese Zeichnung darf ohne unsere ausdrückliche Genehmigung weder vervielfältigt, noch dritten Personen oder Mitbewerbern im Original oder als Kopie ausgehändigt werden. Eigentums- und Urheberrecht vorbehalten.

	date	name
User		Inzkraum
Proved		
Reading station		

Betriebsmittelverzeichnis
-

Mat. -Nr. 1000364531 Doc. -Nr. 2060093317

Revision
Ersetzt Version
Gewicht in [kg]

A3

BMK	Ort	Position	Identifier_Text	SAP_ArticleNumber
-S175	+FRW	/36.B3	Plug connector Rear button PTO shaft	1000051989
-S175.2	+FRW	/36.B3		1000265293
-SP01	+EBW	/57.C2	Splice	
-SP01	+N032	/44.C3	Splice	
-SP02	+EBW	/57.C4	Splice	
-SP02	+N032	/44.B3	Splice	
-SP03	+EBW	/57.C5	Splice	
-SP03	+N032	/44.B6	Splice	
-SP04	+EBW	/57.C7	Splice	
-SP04	+N032	/44.C2	Splice	
-SP05	+FRW	/50.E5	Splice	
-SP05	+N032	/44.E2	Splice	
-SP06	+FRW	/53.B2	Splice	
-SP07	+FRW	/52.B4	Splice	
-SP08	+FRW	/52.B5	Splice	
-SP09	+FRW	/52.D5	Splice	
-SP10	+FRW	/52.B6	Splice	
-SP11	+FRW	/58.C2	Splice	
-SP12	+FRW	/58.C4	Splice	
-SP13	+FRW	/58.C6	Splice	
-SP16	+FRW	/50.C3	Splice	
-SP21	+CBW	/59.C1	Splice	
-SP22	+CBW	/59.C3	Splice	
-SP22	+FRW	/18.D3	Splice	
-SP23	+CBW	/59.C4	Splice	
-SP23	+FRW	/18.D3	Splice	
-SP24	+CBW	/59.C6	Splice	
-SP25	+CBW	/59.C7	Splice	
-SP26	+CBW	/50.B1		
-SP32	+FRW	/47.B4	Splice	
-SP33	+FRW	/47.D4	Splice	

KRAMER
Kramer Werke GmbH
Wacker Neuson Straße 1 / D- 88630 Pfullendorf
Tel.: +49 (0) 7552 9288 -0
Fax: +49 (0) 7552 9288 -49

Diese Zeichnung darf ohne unsere ausdrückliche Genehmigung weder vervielfältigt, noch dritten Personen oder Mitbewerbern im Original oder als Kopie ausgehändigt werden. Eigentums- und Urheberrecht vorbehalten.

	date	name
User		Inzkraum
Proved		
Reading station		

Betriebsmittelverzeichnis
-

Mat. -Nr. 1000364531 Doc. -Nr. 2060093317

Revision
Ersetzt Version
Gewicht in [kg]

A3

BMK	Ort	Position	Identifier_Text	SAP_ArticleNumber
-SP37	+FRW	/50.D4	Splice	
-SP38	+FRW	/50.D4	Splice	
-SP40	+FRW	/13.D6	Splice	
-SP41	+FRW	/30.C3	Splice	
-SP43	+FRW	/30.D3	Splice	
-SP44	+FRW	/30.D4	Splice	
-SP46	+BHW	/37.D7	Splice	
-SP46	+FRW	/52.D6	Splice	
-SP56	+CBW	/50.A3	Splice	
-SP60	+CBW	/48.B2	Splice	
-SP62	+CBW	/24.E6	Splice	
-SP63	+CBW	/23.B4	Splice	
-SP64	+CBW	/26.B2	Splice	
-SP65	+CBW	/26.B2	Splice	
-SP66	+CBW	/26.D4	Splice	
-SP67	+CBW	/26.D4	Splice	
-SP68	+CBW	/28.D1	Splice	
-SP69	+CBW	/27.A7	Splice	
-SP70	+CBW	/27.B7	Splice	
-SP73	+CBW	/56.D2	Splice	
-SP75	+CBW	/56.D6	Splice	
-SP76	+FRW	/55.D7	Splice	
-SP77	+FRW	/55.D5	Splice	
-SP81	+CBW	/45.C2	Splice	
-SP90	+CBW	/20.C4	Splice	
-SP91	+CBW	/20.C4	Splice	
-SP92	+CBW	/20.F4	Splice	
-SP94	+CBW	/21.B1	Splice	
-SP97	+CBW	/23.D5	Splice	
-SP100	+CBW	/30.D6	Splice	
-SP102	+CBW	/55.D2	Splice	

KRAMER
Kramer Werke GmbH
Wacker Neuson Straße 1 / D- 88630 Pfullendorf
Tel.: +49 (0) 7552 9288 -0
Fax: +49 (0) 7552 9288 -49

Diese Zeichnung darf ohne unsere ausdrückliche Genehmigung weder vervielfältigt, noch dritten Personen oder Mitbewerbern im Original oder als Kopie ausgehändigt werden. Eigentums- und Urheberrecht vorbehalten.

	date	name
User		Inzkraum
Proved		
Reading station		

Betriebsmittelverzeichnis
-

Mat. -Nr. 1000364531 Doc. -Nr. 2060093317

Revision
Ersetzt Version
Gewicht in [kg]

A3

BMK	Ort	Position	Identifier_Text	SAP_ArticleNumber
-SP103	+CBW	/55.D3	Splice	
-SP104	+CBW	/49.D7	Splice	
-SP105	+CBW	/49.D7	Splice	
-SP107	+CBW	/49.B7	Splice	
-SP108	+CBW	/49.B7	Splice	
-SP109	+CBW	/16.D3	Splice	
-SP110	+CBW	/16.D3	Splice	
-SP111	+CBW	/15.C3	Splice	
-SP112	+CBW	/15.C3	Splice	
-SP113	+CBW	/28.E3	Splice	
-SP114	+CBW	/23.D4	Splice	
-SP115	+CBW	/13.D2	Splice	
-SP203	+EBW	/27.D4	Splice	
-SP205	+EBW	/35.C6	Splice	
-SP208	+EBW	/35.A3	Splice	
-SP209	+EBW	/20.A2	Splice	
-SP211	+EBW	/27.D1	Splice	
-SP215	+EBW	/17.C2	Splice	
-SP216	+EBW	/17.C2	Splice	
-SP217	+EBW	/20.B4	Splice	
-SP220	+EBW	/17.C4	Splice	
-SP221	+EBW	/17.D4	Splice	
-SP222	+EBW	/27.B3	Splice	
-SP223	+EBW	/24.C2	Splice	
-SP500	+BHW	/50.C6	Splice	
-SP500	+TAW	/31.D7	Splice	
-SP501	+BHW	/50.D6	Splice	
-SP501	+TAW	/31.E7	Splice	
-V001	+EBW	/35.D3	Diode	1000308919
-V002	+EBW	/25.C3	Diode	1000336503
-X001	+CBW	/15.E3	diagnostics- connector	1000312071

KRAMER
Kramer Werke GmbH
Wacker Neuson Straße 1 / D- 88630 Pfullendorf
Tel.: +49 (0) 7552 9288 -0
Fax: +49 (0) 7552 9288 -49

Diese Zeichnung darf ohne unsere ausdrückliche Genehmigung weder vervielfältigt, noch dritten Personen oder Mitbewerbern im Original oder als Kopie ausgehändigt werden. Eigentums- und Urheberrecht vorbehalten.

	date	name
User		lnzkraum
Proved		
Reading station		

Betriebsmittelverzeichnis
-

Mat. -Nr. 1000364531 Doc. -Nr. 2060093317

Revision
Ersetzt Version
Gewicht in [kg]

A3

BMK	Ort	Position	Identifier_Text	SAP_ArticleNumber
-X001	+N025	/20.A3	base Fuse box	1000301691
-X001	+N032	/44.C3	Relay pedestal Front power outlet 14-pole	1000295341
-X002	+EBW		Contact- Housing Fuse box	1000325528
-X002	+N032	/44.C4	Relay pedestal Front power outlet 14-pole	1000295341
-X003	+CB	/5.D2	Main board (fuses & relays)	1000335043
-X003	+CBW	/27.B7	Plug connector	1000095370
-X003	+N032	/44.C5	Relay pedestal Front power outlet 14-pole	1000295341
-X004	+CB	/5.D2	Main board (fuses & relays)	1000335043
-X004	+CBW	/27.B7	Plug connector Main board (fuses & relays)	1000095367
-X004	+N025	/27.B1	Plug connector Main board (fuses & relays)	1000303938
-X004	+N032	/44.C6	Relay pedestal Front power outlet 14-pole	1000295341
-X005	+CB	/5.D2	Main board (fuses & relays)	1000335043
-X005	+EBW	/35.D1	Contact Battery master switch	
-X005	+N025	/27.B3	Fuse holder	1000303938
-X006	+CB	/5.D2	Main board (fuses & relays)	1000335043
-X007	+EBW	/35.B5	Contact High-current relay	1000127092
-X008	+EBW	/35.C5	Contact High-current relay	1000127092
-X008.1	+EBW	/35.C5	Contact High-current relay	1000127092
-X010	+CB	/5.D2	Main board (fuses & relays)	1000335043
-X010	+CBW		Plug connector Ignition and starting switch	1000027368
-X011	+CB	/5.D2	Main board (fuses & relays)	1000335043
-X011	+CBW	/35.C3	Plug connector Ignition and starting switch	1000027386
-X012	+CB	/5.D2	Main board (fuses & relays)	1000335043
-X013	+EBW	/19.B4	Disconnect Central lubrication system	1000027438
-X013	+FRW	/19.C4	Disconnect Central lubrication system	1000027445
-X016	+FRW	/18.D6	Plug connector Bus terminating resistance	1000027429
-X017	+FRW	/50.D4	Disconnect Chassis- Telescopic boom	1000104286
-X017	+TAW	/50.E4	Disconnect Chassis- Telescopic boom	1000104284
-X020	+CBW	/20.C4	Plug connector fuse F086	
-X020	+EBW	/20.C8	Plug connector Fuel preheater	1000027435
-X021	+CBW	/20.D4	Plug connector fuse F086	

KRAMER
Kramer Werke GmbH
Wacker Neuson Straße 1 / D- 88630 Pfullendorf
Tel.: +49 (0) 7552 9288 -0
Fax: +49 (0) 7552 9288 -49

Diese Zeichnung darf ohne unsere ausdrückliche Genehmigung weder vervielfältigt, noch dritten Personen oder Mitbewerbern im Original oder als Kopie ausgehändigt werden. Eigentums- und Urheberrecht vorbehalten.

	date	name
User		Inzkraum
Proved		
Reading station		

Betriebsmittelverzeichnis
-

Mat. -Nr. 1000364531 Doc. -Nr. 2060093317

Revision
Ersetzt Version
Gewicht in [kg]

A3

BMK	Ort	Position	Identifier_Text	SAP_ArticleNumber
-X022	+CBW	/20.C4	Plug connector fuse F087	
-X023	+CBW	/20.D4	Plug connector fuse F087	
-X024	+CBW	/20.C4	Plug connector fuse F088	
-X025	+CBW	/20.D4	Plug connector fuse F088	
-X026	+CBW	/20.C4	Plug connector fuse F089	
-X027	+CBW	/20.D4	Plug connector fuse F089	
-X028	+CBW	/20.C5	Plug connector fuse F090	
-X028	+EBW	/35.B5	Contact fuse F001	1000126891
-X029	+CBW	/20.D5	Plug connector fuse F090	
-X029	+EBW	/35.B6	Contact fuse F002	1000126891
-X030	+CBW	/20.C5	Plug connector fuse F091	
-X030	+EBW	/44.A1	Contact fuse F059	1000130562
-X031	+CBW	/20.D5	Plug connector fuse F091	
-X031	+EBW	/20.A4	Contact fuse F040	1000128451
-X032	+FRW	/55.E6	Disconnect Chassis- Rear power outlet	1000027431
-X032	+RSW	/55.E6	Disconnect Chassis- Rear power outlet	1000085023
-X033	+FRW	/53.D2	Disconnect position switch Autohitch	1000299530
-X033	+RBW	/53.D2	Disconnect position switch Autohitch	1000237955
-X034	+FRW	/31.D6	Disconnect Working head lamps Telescopic boom	1000027438
-X034	+TAW	/31.D7	Disconnect Working head lamps Telescopic boom	1000027445
-X036	+EBW	/44.C1	Disconnect Front power outlet 14-pole	1000321508
-X036	+N032	/44.D1	Disconnect Front power outlet 14-pole	1000321507
-X038	+CBW	/30.B1	Plug connector Interior light	1000027435
-X039	+CBW	/30.C1	Plug connector Interior light	1000027435
-X040	+CBW	/29.D1	Plug connector Rear window heating	1000019583
-X041	+CBW	/29.E1	Plug connector Rear window heating	1000019583
-X042	+CBW	/29.D2	Plug connector Window heating page	1000019583
-X043	+CBW	/29.E2	Plug connector Window heating page	1000019583
-X045	+CB	/21.C5	connection-cable Camera system switchbox	1000027394
-X045	+CBW	/21.C5	Disconnect Camera system switchbox	1000027429
-X050	+CBW	/41.D3	Plug connector Rotating beacon	1000027435

KRAMER
Kramer Werke GmbH
Wacker Neuson Straße 1 / D- 88630 Pfullendorf
Tel.: +49 (0) 7552 9288 -0
Fax: +49 (0) 7552 9288 -49

Diese Zeichnung darf ohne unsere ausdrückliche Genehmigung weder vervielfältigt, noch dritten Personen oder Mitbewerbern im Original oder als Kopie ausgehändigt werden. Eigentums- und Urheberrecht vorbehalten.

	date	name
User		Inzkraum
Proved		
Reading station		

Betriebsmittelverzeichnis
-

Mat. -Nr. 1000364531 Doc. -Nr. 2060093317

Revision
Ersetzt Version
Gewicht in [kg]

A3

BMK	Ort	Position	Identifier_Text	SAP_ArticleNumber
-X050	+EBW	/24.C5	Plug connector Temperature switch S006	1000027435
-X051	+CBW	/41.D3	Plug connector Rotating beacon	1000095371
-X051	+EBW	/24.D5	Plug connector Temperature switch S006	1000027435
-X053	+CBW		Plug connector Radio	1000104902
-X054	+CBW	/33.D2	Plug connector Radio	1000104903
-X055	+CBW	/33.E2	Plug connector speaker	1000104405
-X056	+CBW	/33.E2	Plug connector speaker	1000027370
-X057	+CBW	/33.E3	Plug connector speaker	1000104405
-X058	+CBW	/33.E3	Plug connector speaker	1000027370
-X082	+N025	/38.A2	Fuse holder	1000303938
-X083	+N025	/22.B2	Fuse holder	1000303938
-X084	+N025	/19.B4	Fuse holder	1000303938
-X085	+EBW	/35.D3	Plug connector High-current relay K001	1000019583
-X086	+CBW	/20.D4	Fuse holder F086	1000114137
-X086	+EBW	/35.E3	Plug connector High-current relay K001	1000019583
-X087	+CBW	/20.D4	Fuse holder F087	1000114137
-X088	+CBW	/20.D4	Fuse holder F088	1000114137
-X089	+CBW	/20.D4	Fuse holder F089	1000114137
-X090	+CBW	/20.D5	Fuse holder F090	1000114137
-X091	+CBW	/20.D5	Fuse holder F091	1000114137
-X099	+EBW	/35.A4	Contact Fuse box	1000126891
-X099.1	+EBW	/35.A4	Contact Fuse box	1000107757
-X100	+EBW	/35.B1	Battery terminal plus Terminal	1000337611
-X101	+EBW	/35.B1	Contact Battery terminal	1000099150
-X200	+EB	/35.C1	Battery terminal Negative Terminal	1000337612
-X300	+EBW	/35.E1	Contact Battery master switch	
-X301	+CB	/6.C3	Relay board	1000310922
-X301	+EBW	/35.E1	Contact Battery master switch	
-X302	+CB	/6.C3	Relay board	1000310922
-X303	+CB	/6.C3	Relay board	1000310922
-X401	+BHW	/37.B6	Disconnect Telescopic boom- Boom head	1000100595

KRAMER
Kramer Werke GmbH
Wacker Neuson Straße 1 / D- 88630 Pfullendorf
Tel.: +49 (0) 7552 9288 -0
Fax: +49 (0) 7552 9288 -49

Diese Zeichnung darf ohne unsere ausdrückliche Genehmigung weder vervielfältigt, noch dritten Personen oder Mitbewerbern im Original oder als Kopie ausgehändigt werden. Eigentums- und Urheberrecht vorbehalten.

	date	name
User		Inzkraum
Proved		
Reading station		

Betriebsmittelverzeichnis
-

Mat. -Nr. 1000364531 Doc. -Nr. 2060093317

Revision
Ersetzt Version
Gewicht in [kg]

A3

BMK	Ort	Position	Identifier_Text	SAP_ArticleNumber
-X401	+TPW	/37.B6	Disconnect Telescopic boom- Boom head	1000085009
-X402	+BHW		Disconnect Telescopic boom- Boom head	1000105124
-X402	+TPW		Disconnect Telescopic boom- Boom head	1000105122
-X402	+TPW			1000105124
-XA01	+CBW		Plug connector Indicating instrument	1000306921
-XE04	+CBW	/20.D4	Plug connector Main controls Cabin controller	1000337209
-XE05	+EBW	/20.D2	Plug connector Control valve H1 pump	1000148250
-XE09	+EBW	/49.B6	Plug connector Control valve H1 pump	1000148271
-XE10	+EBW	/39.B4	Plug connector Control valve H1 pump	1000027445
-XE13	+EBW	/17.E2	Plug connector Control valve H1 pump	1000183222
-XE15	+CBW		Plug connector Main controls Cabin controller	1000337210
-XE32	+N032	/44.A2	Plug connector Control valve Front power outlet 14-pole	1000306993
-XE90	+CBW	/21.D7	Plug connector Telematics module	1000254182
-XL00	+CBW	/55.D2	Plug connector Steering-column control lever	1000187268
-XL01	+CBW	/56.B3	Plug connector Steering-column control lever	1000173083
-XM01	+EBW	/22.D5	Plug connector motor control	1000317195
-XP01	+CBW	/35.D7	Contact Main board (fuses & relays) Kl.30	1000099150
-XP02	+CBW	/35.D5	Contact Main board (fuses & relays) Kl.15	1000126891
-XP03	+CBW		Plug connector Main board (fuses & relays)	1000104432
-XP04	+CBW	/41.B3	Plug connector Main board (fuses & relays)	1000100971
-XP05	+CBW	/31.B3	Plug connector Main board (fuses & relays)	1000104432
-XP06	+CB	/5.D2	Main board (fuses & relays)	1000335043
-XP06	+CBW		Plug connector Main board (fuses & relays)	1000100971
-XP07	+CBW	/30.E1	Contact Main board (fuses & relays) Light switch	1000050025
-XP08	+CBW	/30.D5	Contact Main board (fuses & relays) Low beam	1000050027
-XP09	+CBW	/30.D6	Contact Main board (fuses & relays) High beam	1000128452
-XP10	+CBW	/55.B4	Plug connector Main board (fuses & relays) Turn indicator relay	1000187268
-XP11	+CBW		Plug connector Main board (fuses & relays) Intermittent-wipe relay	1000104431
-XP15	+CBW	/13.C4	Contact Main board (fuses & relays) Earth	1000050027
-XP16	+CBW	/45.C3	Plug connector Relay board	1000099055
-XP17	+CBW		Plug connector Relay board	1000346706

KRAMER
Kramer Werke GmbH
Wacker Neuson Straße 1 / D- 88630 Pfullendorf
Tel.: +49 (0) 7552 9288 -0
Fax: +49 (0) 7552 9288 -49

Diese Zeichnung darf ohne unsere ausdrückliche Genehmigung weder vervielfältigt, noch dritten Personen oder Mitbewerbern im Original oder als Kopie ausgehändigt werden. Eigentums- und Urheberrecht vorbehalten.

	date	name
User		Inzkraum
Proved		
Reading station		

Betriebsmittelverzeichnis
-

Mat. -Nr. 1000364531 Doc. -Nr. 2060093317

Revision
Ersetzt Version
Gewicht in [kg]

A3

BMK	Ort	Position	Identifier_Text	SAP_ArticleNumber
-XP18	+CBW		Plug connector Relay board	1000346707
-XR01	+CBW	/49.B7	Disconnect Cabin- Engine bay	1000303405
-XR01	+EBW	/49.B7	Disconnect Cabin- Engine bay	1000260163
-XR02	+CBW	/31.C2	Disconnect Cabin- Chassis	1000303404
-XR02	+FRW	/31.D2	Disconnect Cabin- Chassis	1000303401
-XR03	+CBW	/35.D7	Disconnect Cabin- Engine bay Kl. 30	1000346709
-XR03	+EBW	/35.D7	Disconnect Cabin- Engine bay Kl. 30	1000346708
-XR04	+CBW	/35.D5	Disconnect Cabin- Engine bay Kl. 15	1000147060
-XR04	+EBW	/35.D5	Disconnect Cabin- Engine bay Kl. 15	1000147131
-XR05	+FRW	/50.E7	Disconnect Chassis- Telescopic boom	1000105121
-XR05	+TPW	/50.E7	Disconnect Chassis- Telescopic boom	1000100595
-XR06	+FRW	/37.B4	Disconnect Chassis- Telescopic boom	1000105122
-XR06	+TPW	/37.B5	Disconnect Chassis- Telescopic boom	1000105124
-XX01	+RSW	/55.F6	Rear power outlet	1000027230
-XX02	+BHW	/45.D6	Power outlet 7-pole	1000343673
Y002	+FR	/49.D2	Solenoid valve PCOR	1000241326
Y010	+FR	/49.D2	Solenoid valve PCOR	1000241326
-Y002	+EBW	/49.D2	Plug connector Solenoid valve PCOR	1000027438
-Y002	+FR	/49.D2	Solenoid valve PCOR	1000241326
-Y009	+FR		Solenoid valve Differential lock	1000103961
-Y009	+FRW	/43.D4	Plug connector Solenoid valve Differential lock	1000027332
-Y010	+EBW	/49.D3	Plug connector Solenoid valve Travel direction	1000027438
-Y016	+FR	/37.C4	Solenoid valve Quickhitch Lock	1000328919
-Y016	+FRW	/37.C4	Plug connector Solenoid valve Quickhitch Lock	1000027438
-Y017	+FR	/37.C5	Solenoid valve Quickhitch Unlock	1000328919
-Y017	+FRW	/37.C5	Plug connector Solenoid valve Quickhitch Unlock	1000027438
-Y020	+FR	/40.D3	Solenoid valve Load stabiliser	1000189585
-Y020	+FRW	/40.D3	Plug connector Solenoid valve Load stabiliser	1000027332
-Y021	+FR	/40.D5	Solenoid valve Load stabiliser	1000274651
-Y021	+FRW	/40.D5	Plug connector Solenoid valve Load stabiliser	1000027332
-Y023	+FR	/51.D3	Solenoid valve Telescopic boom retract	1000328919

KRAMER
Kramer Werke GmbH
Wacker Neuson Straße 1 / D- 88630 Pfullendorf
Tel.: +49 (0) 7552 9288 -0
Fax: +49 (0) 7552 9288 -49

Diese Zeichnung darf ohne unsere ausdrückliche Genehmigung weder vervielfältigt, noch dritten Personen oder Mitbewerbern im Original oder als Kopie ausgehändigt werden. Eigentums- und Urheberrecht vorbehalten.

	date	name
User		Inzkraum
Proved		
Reading station		

Betriebsmittelverzeichnis
-

Mat. -Nr. 1000364531 Doc. -Nr. 2060093317

Revision
Ersetzt Version
Gewicht in [kg]

A3

BMK	Ort	Position	Identifier_Text	SAP_ArticleNumber
-Y023	+FRW	/51.D3	Plug connector Solenoid valve Telescopic boom retract	1000027438
-Y024	+FR	/51.C3	Solenoid valve Telescopic boom release	1000328919
-Y024	+FRW	/51.D3	Plug connector Solenoid valve Telescopic boom release	1000027438
-Y025	+BH	/37.C7	Solenoid valve Quickhitch lock	1000027822
-Y025	+BHW	/37.C7	Plug connector Solenoid valve Quickhitch lock	1000000455
-Y031	+EB	/28.E2	Solenoid valve Air conditioning compressor	1000106938
-Y031	+EBW	/28.E2	Plug connector Solenoid valve Air conditioning compressor	1000288496
-Y035	+EB	/24.E2	Solenoid valve ventilator	1000270625
-Y035	+EBW	/24.E2	Plug connector Solenoid valve ventilator	1000027438
-Y037	+EB	/24.E1	Solenoid valve Reversing fan	1000270625
-Y037	+EBW	/24.E1	Plug connector Solenoid valve Reversing fan	1000027410
-Y044	+FR	/53.D4	Solenoid valve Additional control circuit	1000328920
-Y044	+FRW	/53.D4	Plug connector Solenoid valve Additional control circuit	1000027438
-Y045	+FR	/53.D5	Solenoid valve Additional control circuit	1000328920
-Y045	+FRW	/53.D5	Plug connector Solenoid valve Additional control circuit	1000027438
-Y046	+FR	/53.D6	Solenoid valve Switchover Additional control circuit	1000190150
-Y046	+FRW	/53.D6	Plug connector Solenoid valve Switchover Additional control circuit	1000027410
-Y047	+EB		Solenoid valve Auto-hitch unlocking	1000052097
-Y047	+EBW	/53.D6	Plug connector Solenoid valve Auto-hitch unlocking	1000027332
-Y051	+BH		Solenoid valve Switchover 3. Control circuit	1000146528
-Y051	+BHW	/37.C7	Plug connector Solenoid valve Switchover 3. Control circuit	1000000455
-Y066	+FR	/51.D4	Solenoid valve Boom Raise	1000328919
-Y066	+FRW	/51.D4	Plug connector Solenoid valve Boom Raise	1000027438
-Y067	+FR	/51.C4	Solenoid valve Boom Lower	1000328919
-Y067	+FRW	/51.D4	Plug connector Solenoid valve Boom Lower	1000027438
-Y068	+FR	/51.D5	Solenoid valve Tilt cylinder Tilt in	1000328919
-Y068	+FRW	/51.D5	Plug connector Solenoid valve Tilt cylinder Tilt in	1000027438
-Y069	+FR	/51.C5	Solenoid valve Tilt cylinder Tilt out	1000328919
-Y069	+FRW	/51.D5	Plug connector Solenoid valve Tilt cylinder Tilt out	1000027438
-Y106	+FR	/38.E5	Solenoid valve Pressure relief 3. Control circuit	1000273039
-Y106.	+FRW	/38.E5	Plug connector Solenoid valve Pressure relief 3. Control circuit	1000289268

KRAMER
Kramer Werke GmbH
Wacker Neuson Straße 1 / D- 88630 Pfullendorf
Tel.: +49 (0) 7552 9288 -0
Fax: +49 (0) 7552 9288 -49

Diese Zeichnung darf ohne unsere ausdrückliche Genehmigung weder vervielfältigt, noch dritten Personen oder Mitbewerbern im Original oder als Kopie ausgehändigt werden. Eigentums- und Urheberrecht vorbehalten.

	date	name
User		Inzkraum
Proved		
Reading station		

Betriebsmittelverzeichnis
-

Mat. -Nr. 1000364531 Doc. -Nr. 2060093317

Revision
Ersetzt Version
Gewicht in [kg]

A3

BMK	Ort	Position	Identifier_Text	SAP_ArticleNumber
-Y113	+EB	/54.D3	Solenoid valve Hydraulic Trailer brake	1000052097
-Y113	+EBW	/54.D3	Plug connector Solenoid valve Hydraulic Trailer brake	1000027332
-Y116	+FR	/53.D7	Solenoid valve Tipping trailer Lower	1000189585
-Y116	+FRW	/53.D7	Plug connector Solenoid valve Tipping trailer Lower	1000027332
-Y117	+FR	/52.E2	Solenoid valve Three-point linkage Raise	1000328964
-Y117	+FRW	/52.E2	Plug connector Solenoid valve Three-point linkage Raise	1000027438
-Y118	+FR	/52.D2	Solenoid valve Three-point linkage Lower	1000189585
-Y118	+FRW	/52.D2	Plug connector Solenoid valve Three-point linkage Lower	1000027438
-Y120	+FR		Solenoid valve PTO shaft	1000328964
-Y120	+FRW	/36.E5	Plug connector Solenoid valve PTO shaft	1000027438
-Y129	+FR	/52.E3	Solenoid valve Lowering mode Three-point linkage	1000189585
-Y129	+FRW	/52.E3	Plug connector Solenoid valve Lowering mode Three-point linkage	1000027332

KRAMER
Kramer Werke GmbH
Wacker Neuson Straße 1 / D- 88630 Pfullendorf
Tel.: +49 (0) 7552 9288 -0
Fax: +49 (0) 7552 9288 -49

Diese Zeichnung darf ohne unsere ausdrückliche Genehmigung weder vervielfältigt, noch dritten Personen oder Mitbewerbern im Original oder als Kopie ausgehändigt werden. Eigentums- und Urheberrecht vorbehalten.

	date	name
User		Inzkraum
Proved		
Reading station		

Betriebsmittelverzeichnis
-

Mat. -Nr. 1000364531
Doc. -Nr. 2060093317

Revision
Ersetzt Version
Gewicht in [kg]

A3

circuit diagram

418-02

KRAMER
Kramer Werke GmbH
Wacker Neuson Straße 1 / D- 88630 Pfullendorf
Tel.: +49 (0) 7552 9288 -0
Fax: +49 (0) 7552 9288 -49

Diese Zeichnung darf ohne unsere ausdrückliche Genehmigung weder vervielfältigt, noch dritten Personen oder Mitbewerbern im Original oder als Kopie ausgehändigt werden. Eigentums- und Urheberrecht vorbehalten.

	date	name
User		Inzstuea1
Proved	20.06.2016	Inzkraum
Reading station		

TOC

Mat. -Nr. 1000364531

Doc. -Nr. 2060093317

Revision	03
Ersetzt Version	02
Gewicht in [kg]	

A3

SheetName	SheetName 1	SheetName 2
Inh_01	Blattverzeichnis	-
Inh_02	Blattverzeichnis	-
Inh_03	Blattverzeichnis	-
2	Display	
3	ECU connector	
4	Diesel engine	
5	main fuses circuit board	
6	relay circuit board	
7	MVCU TTC580	
8	Main distribution	
9	Travelling drive	
10	Camera	
11	Safe load indicator OMD II	
12	Immobiliser	
13	brake and Brake lights	
14	Camera	
15	CAN0 and diagnostics Cabin	
16	CAN1 and diagnostics Cabin	
17	CAN and diagnostics Motor	
18	CAN and diagnostics Chassis	
19	Central lubrication system	
20	Supply Control valve	
21	Supply Control valve	
22	Diesel particulate filter external	
23	Operator seat	
24	Diesel engine Cooling	
25	Diesel engine parts	
26	Diesel engine RPM throttle	
27	Diesel engine Start	
28	heating and Air conditioning	
29	Window heating	

KRAMER
Kramer Werke GmbH
Wacker Neuson Straße 1 / D- 88630 Pfullendorf
Tel.: +49 (0) 7552 9288 -0
Fax: +49 (0) 7552 9288 -49

Diese Zeichnung darf ohne unsere ausdrückliche Genehmigung weder vervielfältigt, noch dritten Personen oder Mitbewerbern im Original oder als Kopie ausgehändigt werden. Eigentums- und Urheberrecht vorbehalten.

	date	name
User		lnzkraum
Proved		
Reading station		

Blattverzeichnis
-

Mat. -Nr. 1000364531 Doc. -Nr. 2060093317

Revision
Ersetzt Version
Gewicht in [kg]

Inh_01/105

A3

SheetName	SheetName 1	SheetName 2
30	illumination	
31	Working head lamps	
32	Indicating instrument	
33	Radio	
34	Safe load indicator system	
35	Electrical power supply	
36	PTO shaft	
37	Quickhitch facility	
38	Pressure relief	
39	Reversing light	
40	Load stabiliser	
41	Rotating beacon	
42	Horn and Light warning buzzer	
43	Differential lock	
44	Front power outlet 14-Pin	
45	Front power outlet 7-Pin	
46	Power outlet 12 V power outlet	
47	Steering mode switch	
48	switch illumination	
49	Travelling drive	
50	Sensor Telescopic boom	
51	valve Telescopic boom	
52	Rear three-point power lift	
53	Autohitch trailer coupling	
54	Trailer brake	
55	Turn indicator system	
56	Wiper system	
57	Earth Splice EBW	
58	Earth Splice FRW	
59	Earth Splice CBW	
BMK_01	Betriebsmittelverzeichnis	-

KRAMER
Kramer Werke GmbH
Wacker Neuson Straße 1 / D- 88630 Pfullendorf
Tel.: +49 (0) 7552 9288 -0
Fax: +49 (0) 7552 9288 -49

Diese Zeichnung darf ohne unsere ausdrückliche Genehmigung weder vervielfältigt, noch dritten Personen oder Mitbewerbern im Original oder als Kopie ausgehändigt werden. Eigentums- und Urheberrecht vorbehalten.

	date	name
User		lnzkraum
Proved		
Reading station		

Blattverzeichnis
-

Mat. -Nr. 1000364531 Doc. -Nr. 2060093317

Revision
Ersetzt Version
Gewicht in [kg]

A3

SheetName	SheetName 1	SheetName 2
BMK_02	Betriebsmittelverzeichnis	-
BMK_03	Betriebsmittelverzeichnis	-
BMK_04	Betriebsmittelverzeichnis	-
BMK_05	Betriebsmittelverzeichnis	-
BMK_06	Betriebsmittelverzeichnis	-
BMK_07	Betriebsmittelverzeichnis	-
BMK_08	Betriebsmittelverzeichnis	-
BMK_09	Betriebsmittelverzeichnis	-
BMK_10	Betriebsmittelverzeichnis	-
BMK_11	Betriebsmittelverzeichnis	-
BMK_12	Betriebsmittelverzeichnis	-
BMK_13	Betriebsmittelverzeichnis	-
BMK_14	Betriebsmittelverzeichnis	-
BMK_15	Betriebsmittelverzeichnis	-
BMK_16	Betriebsmittelverzeichnis	-
BMK_17	Betriebsmittelverzeichnis	-
BMK_18	Betriebsmittelverzeichnis	-
BMK_19	Betriebsmittelverzeichnis	-

KRAMER
Kramer Werke GmbH
Wacker Neuson Straße 1 / D- 88630 Pfullendorf
Tel.: +49 (0) 7552 9288 -0
Fax: +49 (0) 7552 9288 -49

Diese Zeichnung darf ohne unsere ausdrückliche Genehmigung weder vervielfältigt, noch dritten Personen oder Mitbewerbern im Original oder als Kopie ausgehändigt werden. Eigentums- und Urheberrecht vorbehalten.

	date	name
User		lnzkraum
Proved		
Reading station		

Blattverzeichnis
-

Mat. -Nr. 1000364531
Doc. -Nr. 2060093317

Revision
Ersetzt Version
Gewicht in [kg]

A3

+CB -P014		Display 819.5		
PIN		PIN or CAN	DESCRIPTION	Ref-PAGE
1	LED12	PIN / CAN	engine coolant temperature	
2	LED8	PIN / CAN	pre-heat / wait to start lamp	
3	LED9		battery charging	/25.A3
4		PIN	throttle valve	
5		PIN	optional	
6	LED14	PIN	pressure sensor trailer brake	
7	LCD	PIN	fuel level	/32.A2
8	LED7	PIN / CAN	engine oil pressure	
9	LED6	PIN / CAN	air filter blocked	/32.A4
10	LCD	PIN / CAN	front axle steering	
11	LCD	PIN / CAN	all wheel steering	
12	LCD	PIN / CAN	fast speed / low speed	
13	LCD	PIN / CAN	dog gear	
14	LCD	PIN / CAN	synchronism	
15	LED10	PIN / CAN	parking brake	
16	LED5	PIN / CAN	hydraulic oil filter blocked	/32.A5
17	LCD	PIN / CAN	hydraulic oil temperature high	/24.A5
18	LED1	PIN	turn light	/55.D4
19	LED2	PIN	turn light trailer	/55.D4
20	+UB	PIN	Power +	/20.D6
21	GND	PIN	GND	
22	LED15	PIN	high beam	/30.E6
23		PIN	CAN L	/15.A4
24		PIN	CAN H	
25	LED13	PIN / CAN	differential lock	
26	LED11	PIN / CAN	engine coolant level	
	LED4	CAN	water in fuel	
	LED3	CAN	engine warning	

KRAMER
Kramer Werke GmbH
Wacker Neuson Straße 1 / D- 88630 Pfullendorf
Tel.: +49 (0) 7552 9288 -0
Fax: +49 (0) 7552 9288 -49

Diese Zeichnung darf ohne unsere ausdrückliche Genehmigung weder vervielfältigt, noch dritten Personen oder Mitbewerbern im Original oder als Kopie ausgehändigt werden. Eigentums- und Urheberrecht vorbehalten.

	date	name
User		Inzstuea1
Proved	20.06.2016	Inzkraum
Reading station		

Display

Mat.-Nr. 1000364531 Doc.-Nr. 2060093317

Revision	03
Ersetzt Version	02
Gewicht in [kg]	

A3

+EB -N005		ECU A Connector	
PIN	SIGNAL	DESCRIPTION	Ref-PAGE
61		T-MAP sensor	/4.A1
14			
23			
38			
43		Crankshaft sensor	/4.A2
19			
46			
42		Camshaft sensor	/4.A2
18			
24			
31		Fuel temp. sensor	/4.A2
39			
7		Coolant temp. sensor	
49			/4.A4
73			
74	IN	Injector 1	
3	IN	Injector 2	
26	IN	Injector 3	
51	IN	Injector 4	
16		Rail pressure sensor	/4.A3
40			
41			
45			

+EB -N005		ECU A Connector	
PIN	SIGNAL	DESCRIPTION	Ref-PAGE
21	OUT	Hand accelerator power supply 1 (primary) (HT1)	
32	IN	Hand accelerator sensor track 1 (primary) (HT1)	
58	OUT	Hand accelerator GND 1 (primary) (HT1)	
8	OUT	Hand accelerator GND 2 (secondary) (HT2)	
36	IN	Hand accelerator sensor track 2 (secondary) (HT2)	
86	IN	Tacho output	
79	IN	Neutral	
68	OUT	Grid heater lamp	
69	OUT	MIL lamp	
70	OUT	Check engine lamp	
72	OUT	Water in fuel lamp	
71	OUT	Grid heater	
88	OUT	Variable speed electric fan	
87	OUT	Low speed electric fan	
67	OUT	High speed electric fan	
34	IN	Fuel level sensor	
35	IN	Fuel pressure switch	/22.D7
9	OUT	Fuel inlet pressure GND	
10	OUT	Hydraulic pressure GND	
13	OUT	Air filter differential pressure GND	
15	OUT	Fuel level GND	
37	IN	Hydraulic pressure sensor	
63	IN	Fuel inlet pressure sensor	
91	OUT	Starter motor relay output	/27.E4
83	IN	Isochronous switch	
82	OUT	PTO switch 1	
47	IN	Fuel inlet pressure/Hydraulic Pressue power supply	
80	IN	Optional switch	
94	OUT	Lift pump relay output	/27.E5
11	OUT	Vehicle speed GND	
78	IN	Water in fuel switch	/25.D4

+EB -N005		ECU B Connector	
PIN	SIGNAL	DESCRIPTION	Ref-PAGE
55	IN	PTO switch 2	
16	OUT	Sensor GND	
47	IN	Ignition	/20.E7
48	IN	Ignition	
36	OUT	Coolant temperature output	
23	OUT	Main accelerator power supply 1 (primary) /ACC1)	
24	IN	Main accelerator sensor track 1 (primary) /ACC1)	
25	OUT	Main accelerator GND 1 (primary) /ACC1)	
10	OUT	Main accelerator power supply 2 (primary) /ACC2)	
11	IN	Main accelerator sensor track 2 (primary) /ACC2)	
12	OUT	Main accelerator GND 2 (primary) /ACC1)	
38	IN/OUT	J1939 CAN-H	/17.E3
39	IN/OUT	J1939 CAN-L	
41		Brake switch	
30	IN	Vehicle speed/Variable speed electri fan limit	
9	OUT	Air filter differential pressure supply	
53	IN	Dirty air filter switch	
21	IN	Air filter differential pressure sensor	
43	IN	Optional sensor	
42	IN	Fuel level switch	
2	IN	Signal GND	/22.D5
1	IN	Signal GND	
4	IN	Signal GND	
3	IN	Signal GND	
5	IN	Power supply	/20.D3
6	IN	Power supply	
46	IN	Power supply	
33	OUT	Main relay commend	/27.E3
34	OUT	Main relay command	
54	IN	12V command to ECU (starter motor)	/27.E6
51	IN/OUT	EGR valve (CAN)	/17.E4
52	IN/OUT		
	PWR	EGR valve (CAN)	/27.D2
	OUT	Oil pressure switch	
40	IN	Oil pressure lamp	
7	OUT	Fuel pump	
20	OUT		
18	OUT	Case ground	

KRAMER
Kramer Werke GmbH
Wacker Neuson Straße 1 / D- 88630 Pfullendorf
Tel.: +49 (0) 7552 9288 -0
Fax: +49 (0) 7552 9288 -49

Diese Zeichnung darf ohne unsere ausdrückliche Genehmigung weder vervielfältigt, noch dritten Personen oder Mitbewerbern im Original oder als Kopie ausgehändigt werden. Eigentums- und Urheberrecht vorbehalten.

	date	name
User		Inzstuea1
Proved	20.06.2016	Inzkraum
Reading station		

ECU connector

Mat.-Nr. 1000364531 Doc.-Nr. 2060093317

Revision	03
Ersetzt Version	02
Gewicht in [kg]	

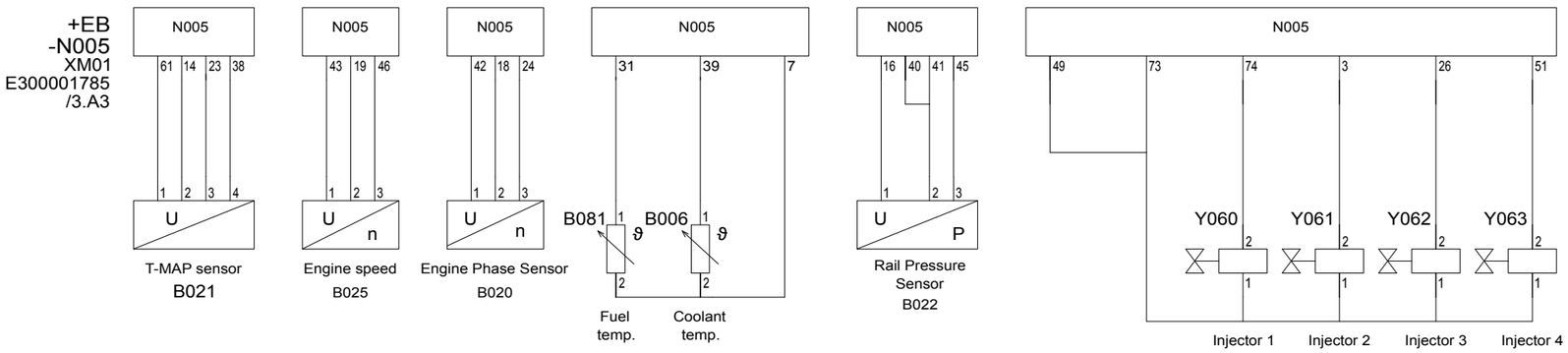

KRAMER
Kramer Werke GmbH
Wacker Neuson Straße 1 / D- 88630 Pfullendorf
Tel.: +49 (0) 7552 9288 -0
Fax: +49 (0) 7552 9288 -49

Diese Zeichnung darf ohne unsere ausdrückliche Genehmigung weder vervielfältigt, noch dritten Personen oder Mitbewerbern im Original oder als Kopie ausgehändigt werden. Eigentums- und Urheberrecht vorbehalten.

	date	name
User		
Proved	20.06.2016	Inzkraum
Reading station		

Diesel engine

Mat. -Nr. 1000364531

Doc. -Nr. 2060093317

Revision	03
Ersetzt Version	02
Gewicht in [kg]	

A3

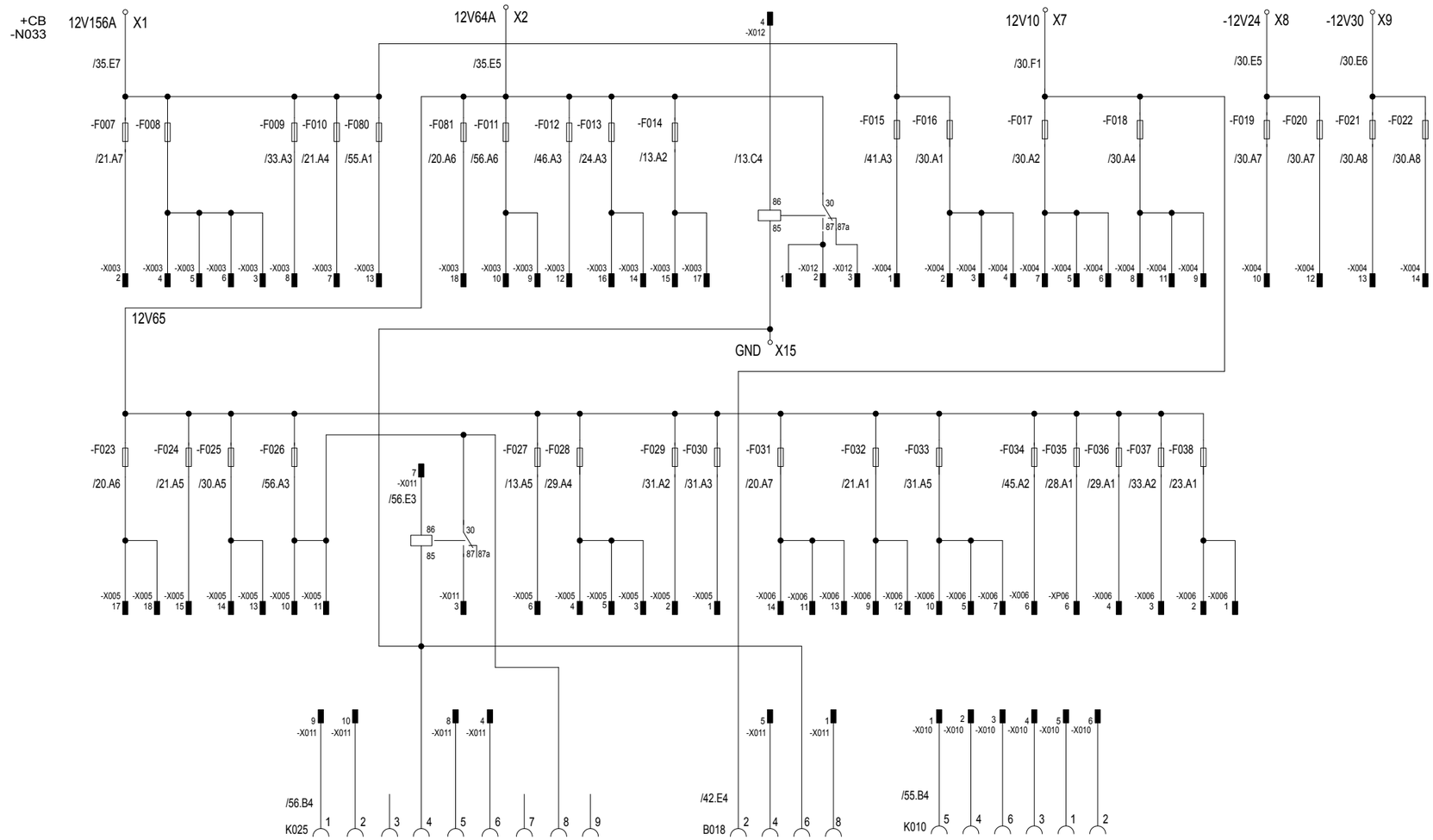

KRAMER
Kramer Werke GmbH
Wacker Neuson Straße 1 / D- 88630 Pfullendorf
Tel.: +49 (0) 7552 9288 -0
Fax: +49 (0) 7552 9288 -49

Diese Zeichnung darf ohne unsere ausdrückliche Genehmigung weder vervielfältigt, noch dritten Personen oder Mitbewerbern im Original oder als Kopie ausgehändigt werden. Eigentums- und Urheberrecht vorbehalten.

	date	name
User		Inzschwn
Proved	20.06.2016	Inzkraum
Reading station		

main fuses circuit board

Mat.-Nr. 1000364531

Doc.-Nr. 2060093317

Revision	03
Ersetzt Version	02
Gewicht in [kg]	

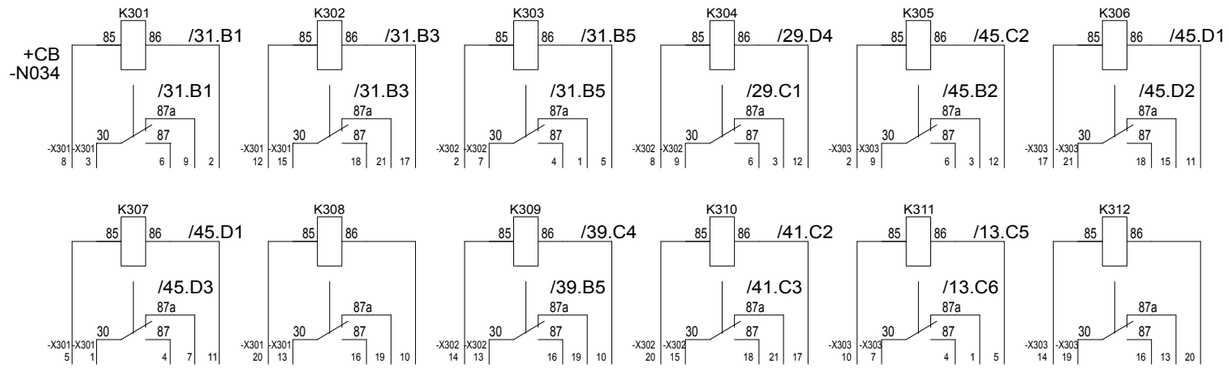

KRAMER
Kramer Werke GmbH
Wacker Neuson Straße 1 / D- 88630 Pfullendorf
Tel.: +49 (0) 7552 9288 -0
Fax: +49 (0) 7552 9288 -49

Diese Zeichnung darf ohne unsere ausdrückliche Genehmigung weder vervielfältigt, noch dritten Personen oder Mitbewerbern im Original oder als Kopie ausgehändigt werden. Eigentums- und Urheberrecht vorbehalten.

	date	name
User		Inzschwn
Proved	20.06.2016	Inzkraum
Reading station		

relay circuit board

Mat.-Nr. 1000364531

Doc.-Nr. 2060093317

Revision	03
Ersetzt Version	02
Gewicht in [kg]	

A3

+CB
-N004

HY-TTC 580

PIN	DESCRIPTION	SIGNAL	Ref-PAGE	NOTE
101	n.c.	DIN		
102	n.c.	DIN		
103	DPF	RIN		
104	Seat contact CH1	RIN	/23.F3	
105	Angl snsr lift arm Sig. 1	AIN	/50.F3	
106	Angl snsr tilt cyli. Sig.2	AIN	/50.F8	
107	3 point lift rear button	AIN	/52.E5	
108	Temp.switch Klima.	AIN	/28.F3	
109	AutoHitch unlocked	DIN	/53.F2	
110	Acclrtn pedal Signal 1	AIN	/26.F2	
111	Loadpress. snsr 3point	AIN	/52.E4	
112	PTO rear button	AIN	/36.F3	
113	Joystick 3point Sig. 1	AIN	/52.E7	
114	Hand throttle Signal 2	AIN	/26.F7	
115	Belt contact	AIN	/23.F5	
116	Hydr.deactivation active	DIN	/50.E2	
117	Quick change not acttd	DIN	/50.E1	
118	BAT-	BAT-	/20.E4	
119	BAT-	BAT-		
120	BAT-	BAT-		
121	BAT-	BAT-		
122	100% Load signal	DIN	/34.E3	
123	Parking Brake	DIN	/13.F2	
124	refeed K101	DIN	/45.F2	
125	n.c.	DIN		
126	n.c.	DIN		
127	Hydr. oil temperature	Temp	/24.F6	
128	µswtch stearing level	RIN	/47.F4	
129	Angl. snsr lift arm Sig.2	AIN	/50.F3	
130	Angl. snsr tilt cyli. Sig.1	AIN	/50.F8	
131	3point lower rear button	AIN	/52.E6	
132	refeed K102	AIN	/45.F3	
133	AutoHitch locked	DIN	/53.F2	
134	Acclrtn pedal Signal 2	AIN	/26.F3	
135	n.c.	AIN		
136	Load stabiliser on	AIN	/40.F1	
137	Joystick 3point sig. 2	AIN	/52.E7	
138	Hand throttle signal 1	AIN	/26.F6	
139	Seat contact CH2	AIN	/23.F4	
140	Hydr.deactivation inactive	DIN	/50.E2	
141	Quick change acttd	DIN	/50.E1	
142	BAT-	BAT-	/20.E5	
143	BAT-	BAT-		
144	BAT-	BAT-		
145	BAT-	BAT-		
146	Contact switch diff lock	DIN		
147	Parking Brake	DIN	/13.F2	
148	coolant level snsr	DIN	/24.B2	
149	Working light front	DOUT	/31.A1	
150	Speed snsr H1 sig1	DIN	/49.E4	
151	n.c.	FreqIN		
152	Working light tele arm	DOUT	/31.A4	
153	n.c.	DOUT		
154	Quick change release	PWM	/37.A1	
155	Front socket 7pol K101	DOUT / AIN	/45.A1	
156	Ride control	PWM	/40.A5	
157	Fan	PWM	/24.B2	
158	Front socket 7pol K016	DOUT / AIN	/45.A1	
159	switch valve rear aux	DOUT	/53.A6	
160	Hydr. trailer brake	PWM	/54.A2	
161	n.c.	DOUT		
162	3point floating tilt	PWM	/52.A2	
163	Reverse fan	DOUT	/24.B1	
164	n.c.	DOUT		
165	Retract telescopic arm	PWM CFB	/51.A3	
166	Release AutoHitch	DOUT	/53.A6	
167	n.c.	DOUT		

PIN	DESCRIPTION	SIGNAL	Ref-PAGE	NOTE
168	Lower tele arm	PWM CFB	/51.A4	
169	PCOR-valve	DOUT		
170	n.c.	DOUT		
171	Tilt forward (Dump)	PWM CFB	/51.A5	
172	3point valve lower	PWM	/52.A2	
173	Working light rear	DOUT	/31.A2	
174	n.c.	DIN		
175	n.c.	FreqIN		
176	Beacon	DOUT	/41.B2	
177	Ride control	PWM	/40.A3	
178	Quick change release	PWM	/37.A1	
179	Front socket 7pol sig2	DOUT / AIN	/45.A1	
180	n.c.	PWM		
181	Dumper tilt unlock	DOUT	/53.A7	
182	Differential lock	DOUT	/43.A4	
183	rear aux. lift	PWM	/53.A4	
184	Quick change release	DOUT	/37.A2	
185	n.c.	DOUT		
186	rear aux. lower	PWM	/53.A5	
187	n.c.	DOUT		
188	Relay driving signals	DOUT		
189	Extend telescopic arm	PWM CFB	/51.A3	
190	Switch valve front aux	DOUT	/37.A2	
191	n.c.	DOUT		
192	Tele lift	PWM CFB	/51.A4	
193	PTO valve	PWM	/36.A4	
194	n.c.	DOUT		
195	Tilt back (Roll In)	PWM CFB	/51.A4	
196	3point valve lift	PWM	/52.A2	

PIN	DESCRIPTION	SIGNAL	Ref-PAGE	NOTE
201	BAT+	BAT+	/20.E4	
202	BAT+	BAT+		
203	BAT+	BAT+		
204	BAT+	BAT+		
205	BAT+	BAT+		
206	BAT+	BAT+		
207	P/O steady no wakeup	K15	/20.D5	
208	n.c.	LIN		
209	CAN0 -	CAN 0, Low	/15.A1	
210	CAN1 -	CAN 1, Low	/16.C1	
211	CAN2 -	CAN 2, Low		
212	n.c.	CAN 3, Low		
213	n.c.	CAN 4, Low		
214	n.c.	CAN 5, Low		
215	n.c.	CAN 6, Low		
216	n.c.	CAN 2 +		
217	Sensor GND 1	Sensor -	/50.F7	
218	n.c.	TD+		
219	n.c.	TD-		
220	WAKE_UP	WAKE_UP		
221	5...10V Sensor power	5V Sensor PWR	/50.A1	
222	CAN0 +	CAN 0, High	/15.A1	
223	CAN1 +	CAN 1, High	/16.C1	
224	CAN2 +	CAN 2, High		
225	n.c.	CAN 3, High		
226	n.c.	CAN 4, Low		
227	n.c.	CAN 5, Low		
228	n.c.	CAN 6, Low		
229	n.c.	CAN 2 -		
230	Sensor GND 2	Sensor -	/50.F6	
231	n.c.	RD+		
232	n.c.	RD-		
233	n.c.	RTC		
234	5V Sensor +	5V Sensor +	/50.A3	
235	resistor CAN0 -	CAN0 -	/15.E1	
236	resistor CAN1 -	CAN1 -	/16.E1	
237	resistor CAN2 -	CAN2 -		
238	Tele arm extndd clsd	DIN	/50.F6	
239	n.c.	DIN		
240	n.c.	DIN		
241	n.c.	DIN		
242	n.c.	RS232		
243	Sensor GND	Sensor ground	/24.F6	
244	Sensor GND	SGND	/23.F2	
245	Sensor GND	SGND	/26.F2	
246	BAT + (CPU)	BAT + (CPU)	/20.E2	
247	5V Sensor +	5V Sensor +	/50.A3	
248	resistor CAN0 +	CAN0 +	/15.E1	
249	resistor CAN1 +	CAN1 +	/16.E1	
250	resistor CAN2 +	CAN2 +		
251	Tele arm extndd brk cont	DIN	/50.F6	
252	Oiltemp. swtch coolant	DIN		
253	n.c.	DIN		
254	n.c.	DIN		
255	n.c.	RS232		
256	SGND	SGND	/26.F3	
257	SGND	SGND	/26.F4	
258	SGND	SGND	/26.F4	

KRAMER
Kramer Werke GmbH
Wacker Neuson Straße 1 / D- 88630 Pfullendorf
Tel.: +49 (0) 7552 9288 -0
Fax: +49 (0) 7552 9288 -49

Diese Zeichnung darf ohne unsere ausdrückliche Genehmigung weder vervielfältigt, noch dritten Personen oder Mitbewerbern im Original oder als Kopie ausgehändigt werden. Eigentums- und Urheberrecht vorbehalten.

	date	name
User		Inzstuea1
Proved	20.06.2016	Inzkraum
Reading station		

MVCU TTC580

Mat.-Nr. 1000364531 Doc.-Nr. 2060093317

Revision	03
Ersetzt Version	02
Gewicht in [kg]	

A3

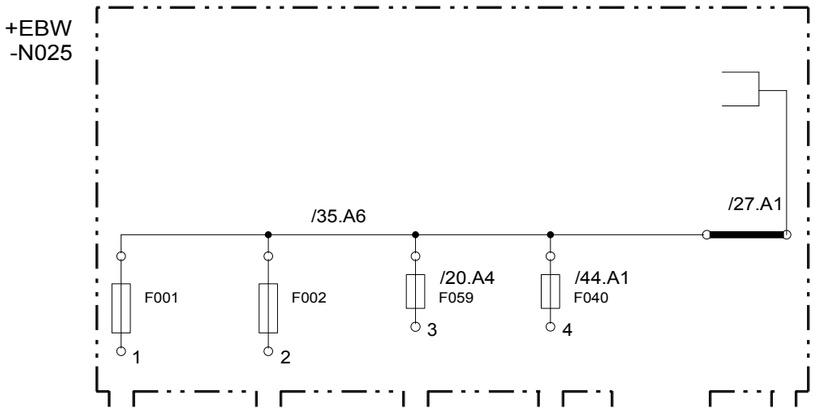

KRAMER
Kramer Werke GmbH
Wacker Neuson Straße 1 / D- 88630 Pfullendorf
Tel.: +49 (0) 7552 9288 -0
Fax: +49 (0) 7552 9288 -49

Diese Zeichnung darf ohne unsere ausdrückliche Genehmigung weder vervielfältigt, noch dritten Personen oder Mitbewerbern im Original oder als Kopie ausgehändigt werden. Eigentums- und Urheberrecht vorbehalten.

	date	name
User		Inzschwn
Proved	20.06.2016	Inzkraum
Reading station		

Main distribution

Mat. -Nr. 1000364531

Doc. -Nr. 2060093317

Revision	03
Ersetzt Version	02
Gewicht in [kg]	

+EB -N001		Steuerung H1 Pumpe		
PIN	CON.	SIGNAL	DESCRIPTION	Ref-PAGE
1	CC1	PWR	Battery -	/20.D1
2	CC1		Battery +	
3	CC1		Sensor +	/49.C6
4	CC1		Sensor -	/49.D6
8	CC1		Sensor +	/49.A3
9	CC1		Sensor -	/49.E3
5	CC1	IN	Mtr RPM In (Frequency)	/49.E5
6	CC1	IN	Frwrd In (Digital)	
7	CC1	IN	Rvrs In (Digital)	
10	CC1	IN	Drv Pdl In (Analog-Norm)	/49.D6
11	CC1	IN		
12	CC1	IN	Ntrl In (Digital)	
11	CC2	IN	Md Swtch A In (Digital)	
2	CC2	IN	Md Swtch B In (Digital-Norm)	
12	CC2	IN		
7	CC2	IN	Inch In (Analog-Norm)	/49.B6
1	CC2	IN		
4	CC2	IN	Mtr Drctn In (Analog)	/49.E4
3	CC2	OUT	PROP/PCOR Out (PWM)	/49.A2
8	CC2	OUT	Mtr BPD Out (Digital)	/49.A2
9	CC2	OUT	Dgtl Out B2 -	/13.E5
10	CC2	OUT	Dgtl Out B1 +	
5	CC2		Sensor +	/49.A6
6	CC2		Sensor -	/49.B6

+EB -N001		Steuerung H1 Pumpe		
PIN	CON.	SIGNAL	DESCRIPTION	Ref-PAGE
1	CAN		High	/17.E2
2	CAN		Low	
3	CAN		Shield	
1	PPC			
2	PPC	IN		
3	PPC			
4	PPC			
5	PPC	IN		
6	PPC			
1	PPU		Sensor +	
2	PPU	IN	Pmp RPM In (Frequency)	/49.A1
3	PPU		Sensor -	
1	PSC		PWM C1 +	/49.C1
6	PSC		PWM C1 -	
2	PSC		PWM C2 +	/49.E1
5	PSC		PWM C2 -	
3	PSC	OUT	Digital Output A1 +	/39.A4
4	PSC	OUT	Digital Output A2 -	
1	CC3			
2	CC3			

KRAMER
Kramer Werke GmbH
Wacker Neuson Straße 1 / D- 88630 Pfullendorf
Tel.: +49 (0) 7552 9288 -0
Fax: +49 (0) 7552 9288 -49

Diese Zeichnung darf ohne unsere ausdrückliche Genehmigung weder vervielfältigt, noch dritten Personen oder Mitbewerbern im Original oder als Kopie ausgehändigt werden. Eigentums- und Urheberrecht vorbehalten.

	date	name
User		Inzschwn
Proved	20.06.2016	Inzkraum
Reading station		

Travelling drive

Mat.-Nr. 1000364531 Doc.-Nr. 2060093317

Revision	03
Ersetzt Version	02
Gewicht in [kg]	

+CB -N031		Camera Switch Box M9100167	
PIN		DESCRIPTION	Ref-PAGE
1 2 3 4		Switch Box	/14.C4
BK		PWR	
BN		GND	/21.D5
GNYE		Trigger 1	
GY		Trigger 2	/39.C6
BU		Trigger 3	

KRAMER
Kramer Werke GmbH
Wacker Neuson Straße 1 / D- 88630 Pfullendorf
Tel.: +49 (0) 7552 9288 -0
Fax: +49 (0) 7552 9288 -49

Diese Zeichnung darf ohne unsere ausdrückliche Genehmigung weder vervielfältigt, noch dritten Personen oder Mitbewerbern im Original oder als Kopie ausgehändigt werden. Eigentums- und Urheberrecht vorbehalten.

	date	name
User		lnzschwn
Proved	20.06.2016	lnzkraum
Reading station		

Camera

Mat.-Nr. 1000364531 Doc.-Nr. 2060093317

Revision	03
Ersetzt Version	02
Gewicht in [kg]	

A3

+CB -P006		Lastanzeige OMD II	
PIN	SIGNAL	DESCRIPTION	Ref-PAGE
1		PWR +	/34.C4
2		GND	
3	-VE	Cutoff output S1	/34.A3
4	-VE	Sensor 1	/34.E2
5	+VE	Sensor 2	/34.A1
6		Sensor	/34.E2
7		CAN H	/16.C2
8		CAN L	

KRAMER
Kramer Werke GmbH
Wacker Neuson Straße 1 / D- 88630 Pfullendorf
Tel.: +49 (0) 7552 9288 -0
Fax: +49 (0) 7552 9288 -49

Diese Zeichnung darf ohne unsere ausdrückliche Genehmigung weder vervielfältigt, noch dritten Personen oder Mitbewerbern im Original oder als Kopie ausgehändigt werden. Eigentums- und Urheberrecht vorbehalten.

	date	name
User		lnzkraum
Proved	20.06.2016	lnzkraum
Reading station		

Safe load indicator OMD II

Mat. -Nr. 1000364531 Doc. -Nr. 2060093317

Revision	03
Ersetzt Version	02
Gewicht in [kg]	

A3

+CB -N021	Steuergerät Wegfahrsperre		
PIN	SIGNAL	DESCRIPTION	
1	KEY_7	KEY	
2	KEY_6		
3	KEY_5		
4	KEY_4		
5	KEY_3		
6	KEY_2		
7	KEY_1		
8	KEY_0		
9	LED_L	LED DRV	
10	LED_H		
11	ANT_1	Antenna	
12	ANT_2		
1	K3_COM	K3	/27.C6
2	K3_NO		
3	K2_COM	K2	/20.C7
4	K2_NO		
5	K1_NO	K1	
6	K1_NC		
12	K1_COM		
8	15/54	15/54 Ignition Key	/21.D6
9	CAN_H	CAN-Bus	/15.A5
10	CAN_L		
7	+Batt.In	Power	/21.D6
11	GND		

KRAMER
Kramer Werke GmbH
Wacker Neuson Straße 1 / D- 88630 Pfullendorf
Tel.: +49 (0) 7552 9288 -0
Fax: +49 (0) 7552 9288 -49

Diese Zeichnung darf ohne unsere ausdrückliche Genehmigung weder vervielfältigt, noch dritten Personen oder Mitbewerbern im Original oder als Kopie ausgehändigt werden. Eigentums- und Urheberrecht vorbehalten.

	date	name
User		lnzkraum
Proved	20.06.2016	lnzkraum
Reading station		

Immobiliser

Mat.-Nr. 1000364531 Doc.-Nr. 2060093317

Revision	03
Ersetzt Version	02
Gewicht in [kg]	

A3

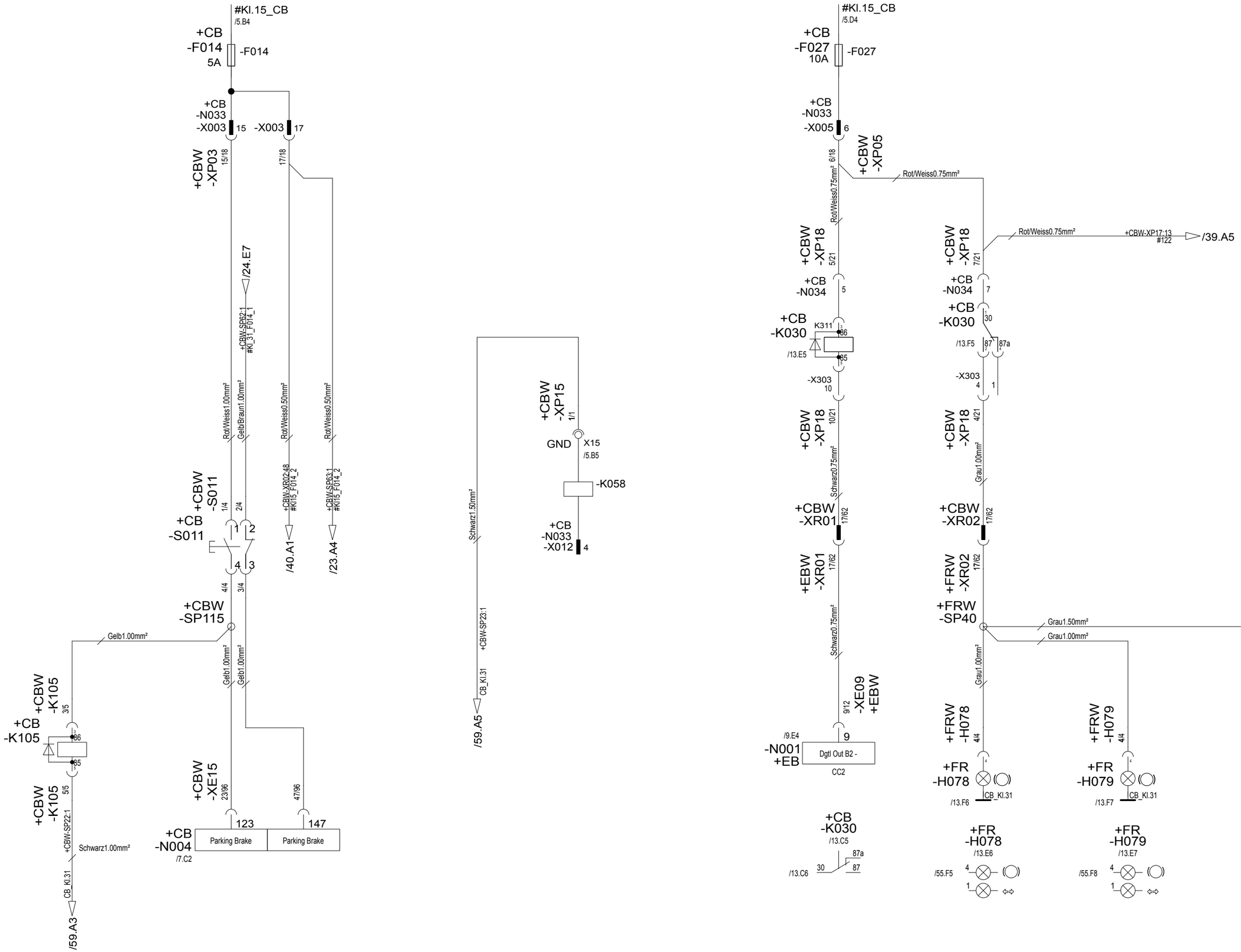

KRAMER
Kramer Werke GmbH
Wacker Neuson Straße 1 / D- 88630 Pfullendorf
Tel.: +49 (0) 7552 9288 -0
Fax: +49 (0) 7552 9288 -49

Diese Zeichnung darf ohne unsere ausdrückliche Genehmigung weder vervielfältigt, noch dritten Personen oder Mitbewerbern im Original oder als Kopie ausgehändigt werden. Eigentums- und Urheberrecht vorbehalten.

	date	name
User		Inzschwn
Proved	20.06.2016	Inzkraum
Reading station		

brake and Brake lights

Mat.-Nr. 1000364531
Doc.-Nr. 2060093317

Revision	03
Ersetzt Version	02
Gewicht in [kg]	

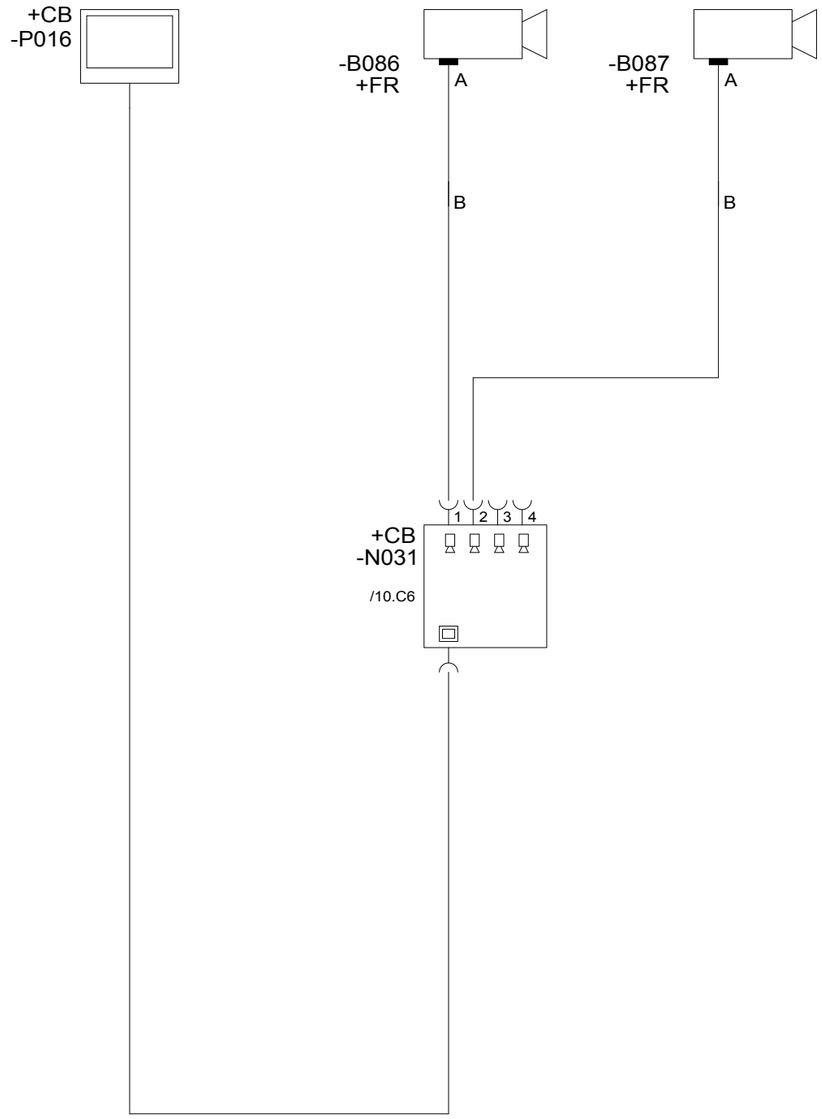

KRAMER
Kramer Werke GmbH
Wacker Neuson Straße 1 / D- 88630 Pfullendorf
Tel.: +49 (0) 7552 9288 -0
Fax: +49 (0) 7552 9288 -49

Diese Zeichnung darf ohne unsere ausdrückliche Genehmigung weder vervielfältigt, noch dritten Personen oder Mitbewerbern im Original oder als Kopie ausgehändigt werden. Eigentums- und Urheberrecht vorbehalten.

	date	name
User		Inzschwn
Proved	20.06.2016	Inzkraum
Reading station		

Camera

Mat. -Nr. 1000364531

Doc. -Nr. 2060093317

Revision	03
Ersetzt Version	02
Gewicht in [kg]	

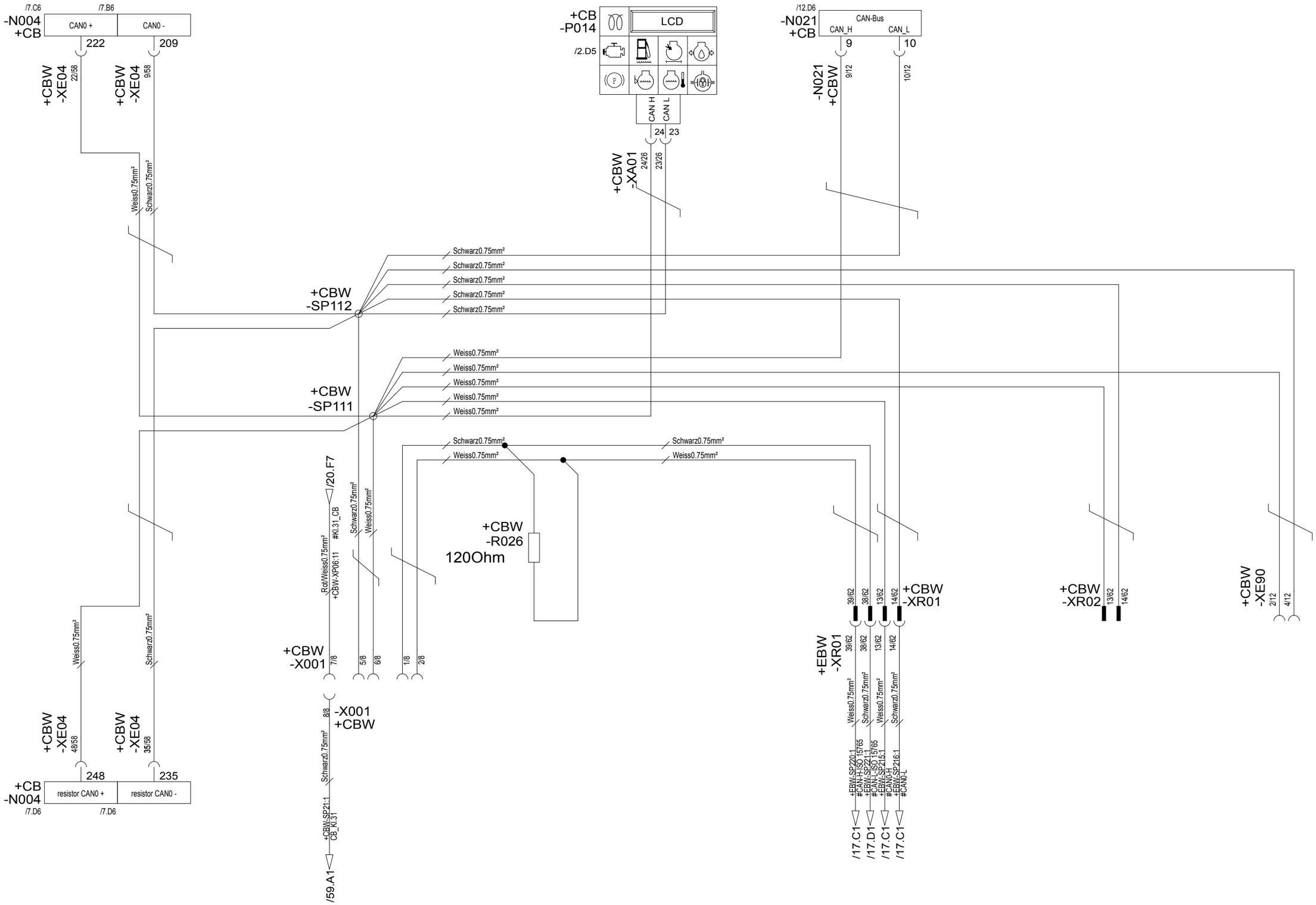

KRAMER
Kramer Werke GmbH
Wacker Neuson Straße 1 / D- 88630 Pfullendorf
Tel.: +49 (0) 7552 9288 -0
Fax: +49 (0) 7552 9288 -49

Diese Zeichnung darf ohne unsere ausdrückliche Genehmigung weder vervielfältigt, noch dritten Personen oder Mitbewerbern im Original oder als Kopie ausgehändigt werden. Eigentums- und Urheberrecht vorbehalten.

	date	name
User		Inzschwn
Proved	20.06.2016	Inzkraum
Reading station		

CAN0 and diagnostics Cabin

Mat.-Nr. 1000364531 Doc.-Nr. 2060093317

Revision	03
Ersetzt Version	02
Gewicht in [kg]	

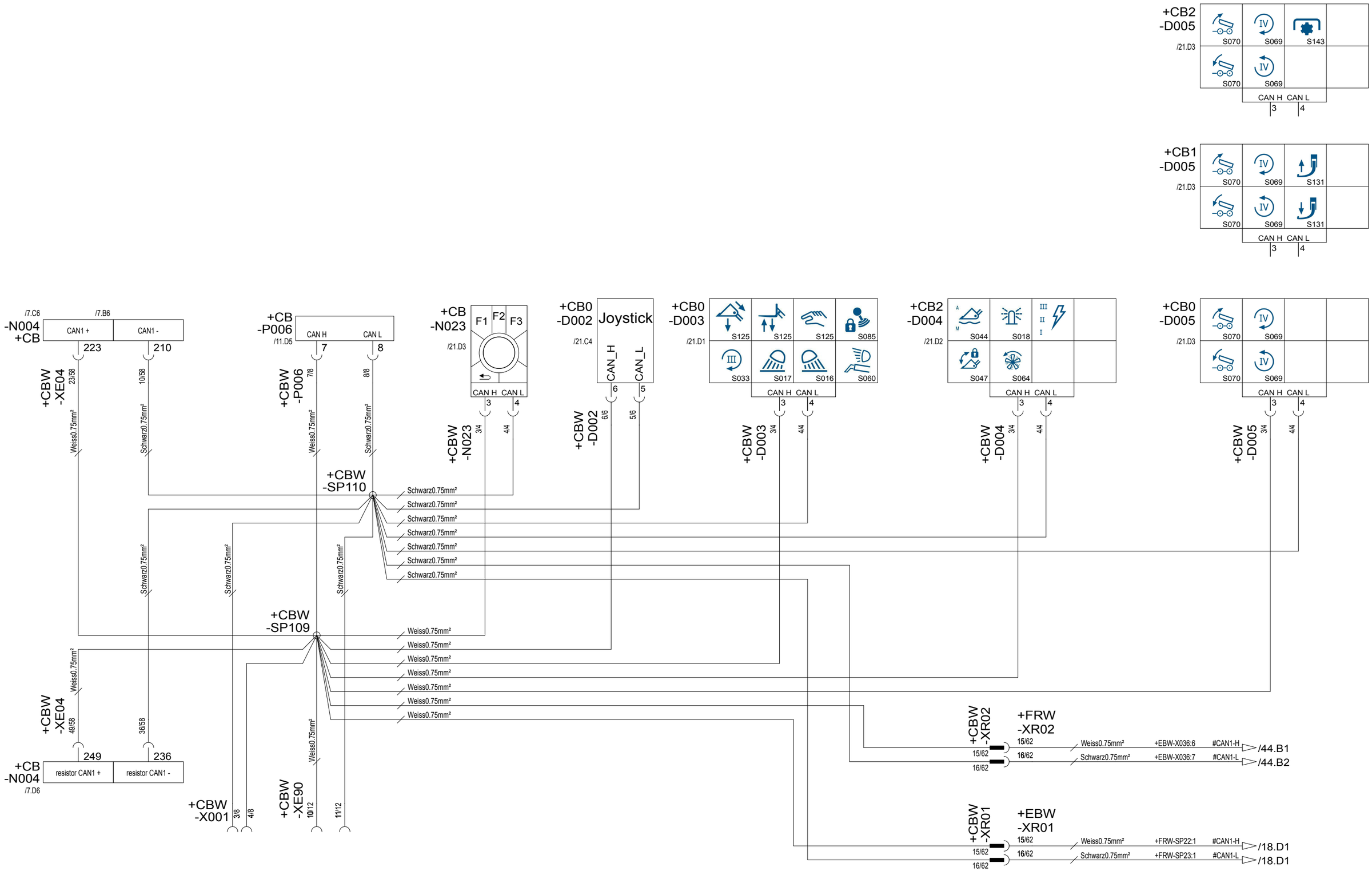

KRAMER
Kramer Werke GmbH
Wacker Neuson Straße 1 / D- 88630 Pfullendorf
Tel.: +49 (0) 7552 9288 -0
Fax: +49 (0) 7552 9288 -49

Diese Zeichnung darf ohne unsere ausdrückliche Genehmigung weder vervielfältigt, noch dritten Personen oder Mitbewerbern im Original oder als Kopie ausgehändigt werden. Eigentums- und Urheberrecht vorbehalten.

	date	name
User		Inzkraum
Proved	20.06.2016	Inzkraum
Reading station		

CAN1 and diagnostics Cabin

Mat. -Nr. 1000364531

Doc. -Nr. 2060093317

Revision	03
Ersetzt Version	02
Gewicht in [kg]	

A3

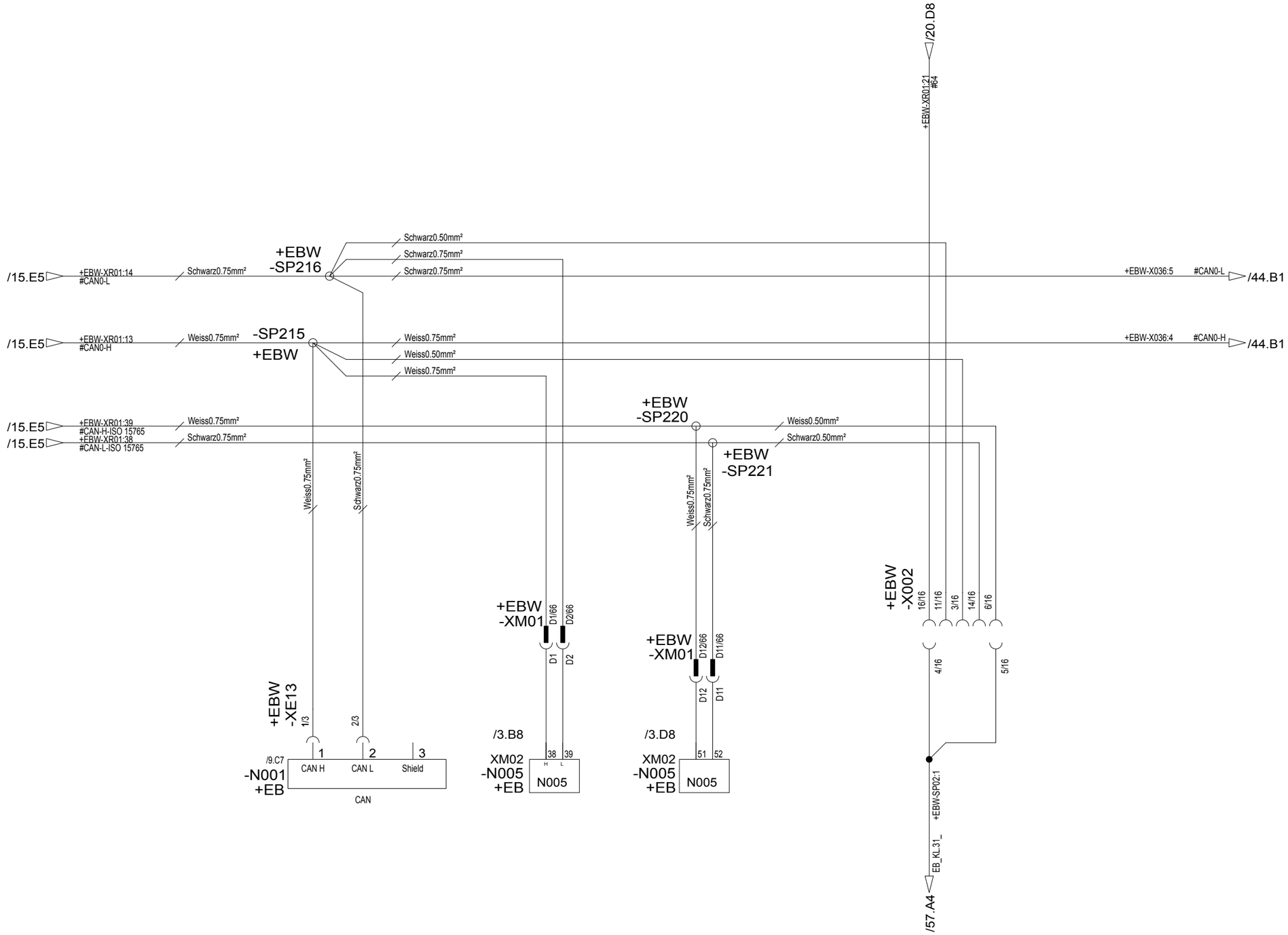

KRAMER
Kramer Werke GmbH
Wacker Neuson Straße 1 / D- 88630 Pfullendorf
Tel.: +49 (0) 7552 9288 -0
Fax: +49 (0) 7552 9288 -49

Diese Zeichnung darf ohne unsere ausdrückliche Genehmigung weder vervielfältigt, noch dritten Personen oder Mitbewerbern im Original oder als Kopie ausgehändigt werden. Eigentums- und Urheberrecht vorbehalten.

	date	name
User		Inzstuea1
Proved	20.06.2016	Inzkraum
Reading station		

CAN and diagnostics Motor

Mat.-Nr. 1000364531

Doc.-Nr. 2060093317

Revision	03
Ersetzt Version	02
Gewicht in [kg]	

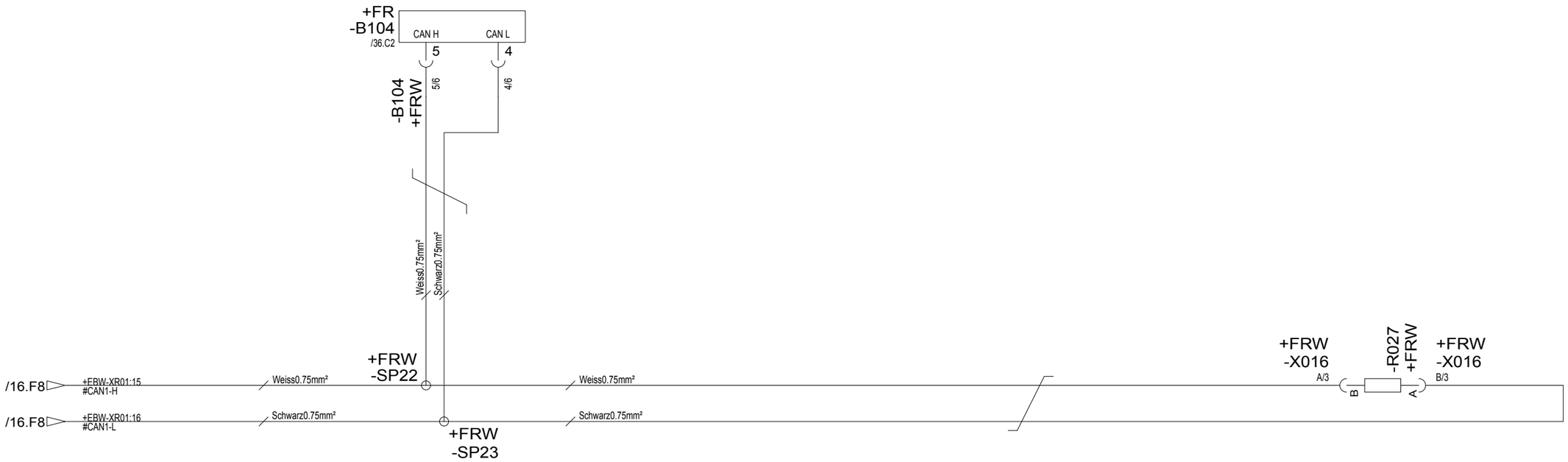

KRAMER
Kramer Werke GmbH
Wacker Neuson Straße 1 / D- 88630 Pfullendorf
Tel.: +49 (0) 7552 9288 -0
Fax: +49 (0) 7552 9288 -49

Diese Zeichnung darf ohne unsere ausdrückliche Genehmigung weder vervielfältigt, noch dritten Personen oder Mitbewerbern im Original oder als Kopie ausgehändigt werden. Eigentums- und Urheberrecht vorbehalten.

	date	name
User		Inzstuea1
Proved	20.06.2016	Inzkraum
Reading station		

CAN and diagnostics Chassis

Mat.-Nr. 1000364531 Doc.-Nr. 2060093317

Revision	03
Ersetzt Version	02
Gewicht in [kg]	

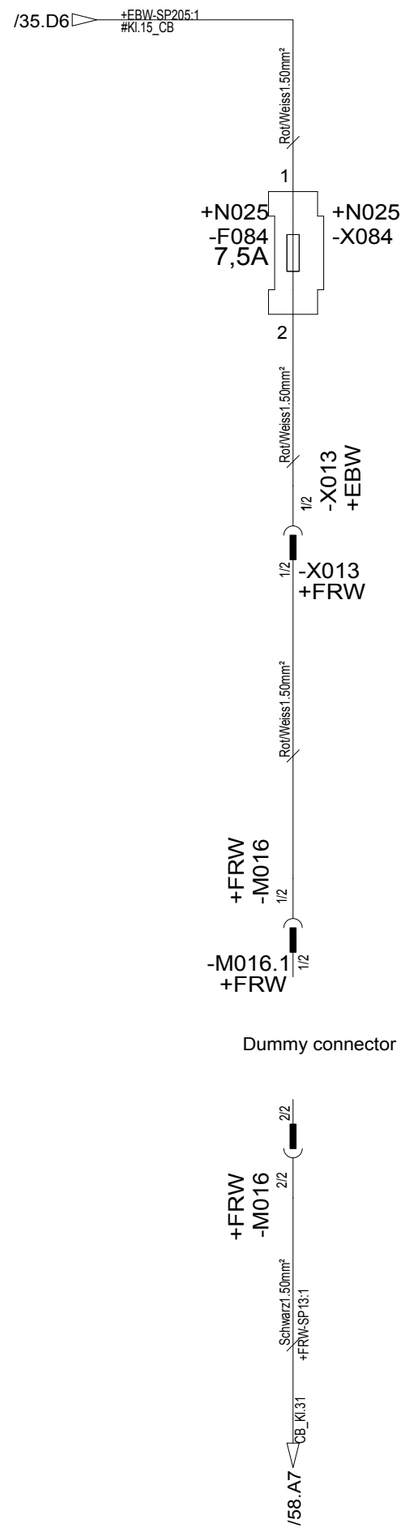

KRAMER
Kramer Werke GmbH
Wacker Neuson Straße 1 / D- 88630 Pfullendorf
Tel.: +49 (0) 7552 9288 -0
Fax: +49 (0) 7552 9288 -49

Diese Zeichnung darf ohne unsere ausdrückliche Genehmigung weder vervielfältigt, noch dritten Personen oder Mitbewerbern im Original oder als Kopie ausgehändigt werden. Eigentums- und Urheberrecht vorbehalten.

	date	name
User		Inzstuea1
Proved	20.06.2016	Inzkraum
Reading station		

Central lubrication system

Mat. -Nr. 1000364531

Doc. -Nr. 2060093317

Revision	03
Ersetzt Version	02
Gewicht in [kg]	

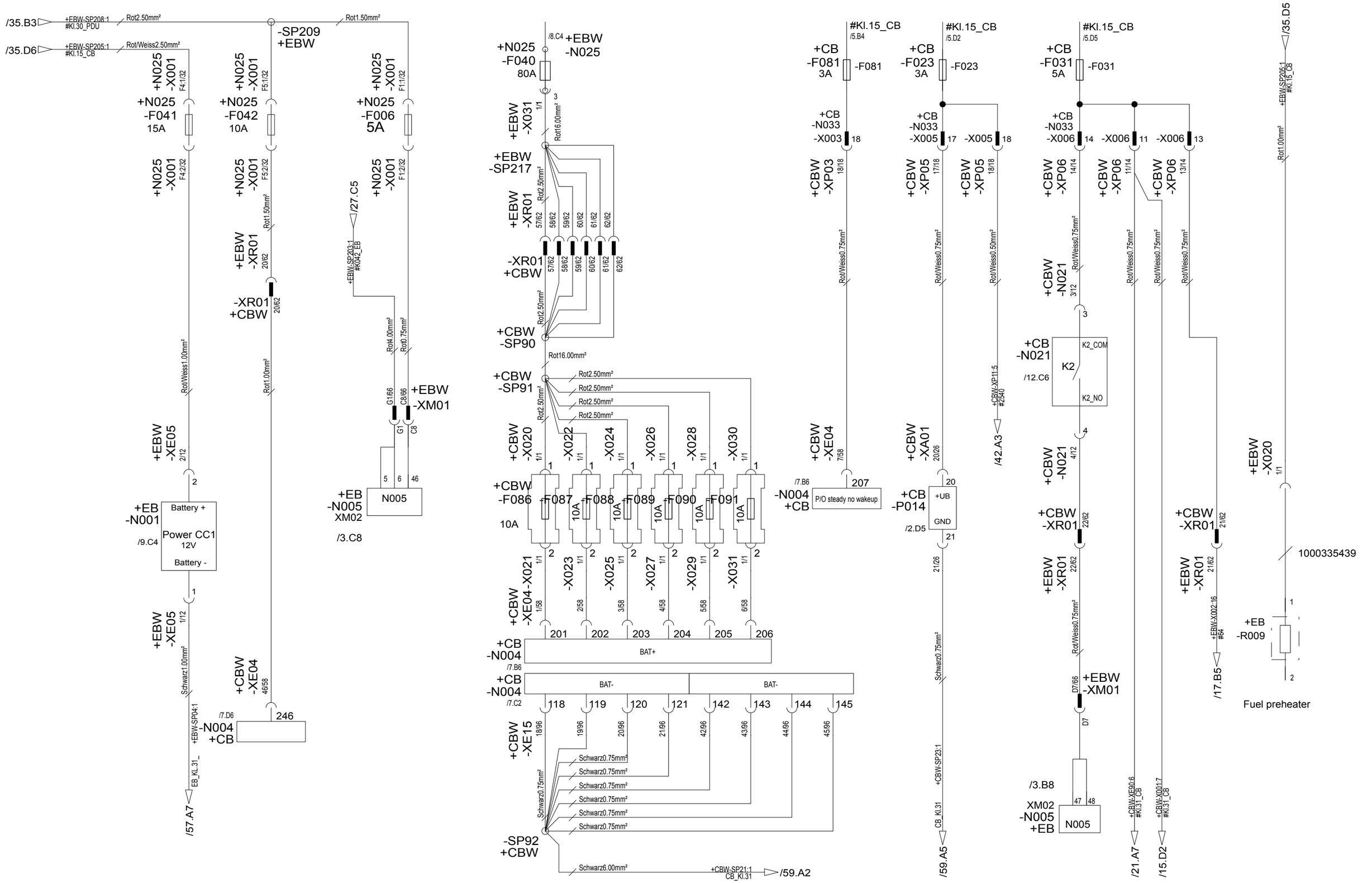

KRAMER
Kramer Werke GmbH
Wacker Neuson Straße 1 / D- 88630 Pfullendorf
Tel.: +49 (0) 7552 9288 -0
Fax: +49 (0) 7552 9288 -49

Diese Zeichnung darf ohne unsere ausdrückliche Genehmigung weder vervielfältigt, noch dritten Personen oder Mitbewerbern im Original oder als Kopie ausgehändigt werden. Eigentums- und Urheberrecht vorbehalten.

	date	name
User		Inzschwn
Proved	20.06.2016	Inzkraum
Reading station		

Supply Control valve

Mat. -Nr. 1000364531

Doc. -Nr. 2060093317

Revision	03
Ersetzt Version	02
Gewicht in [kg]	

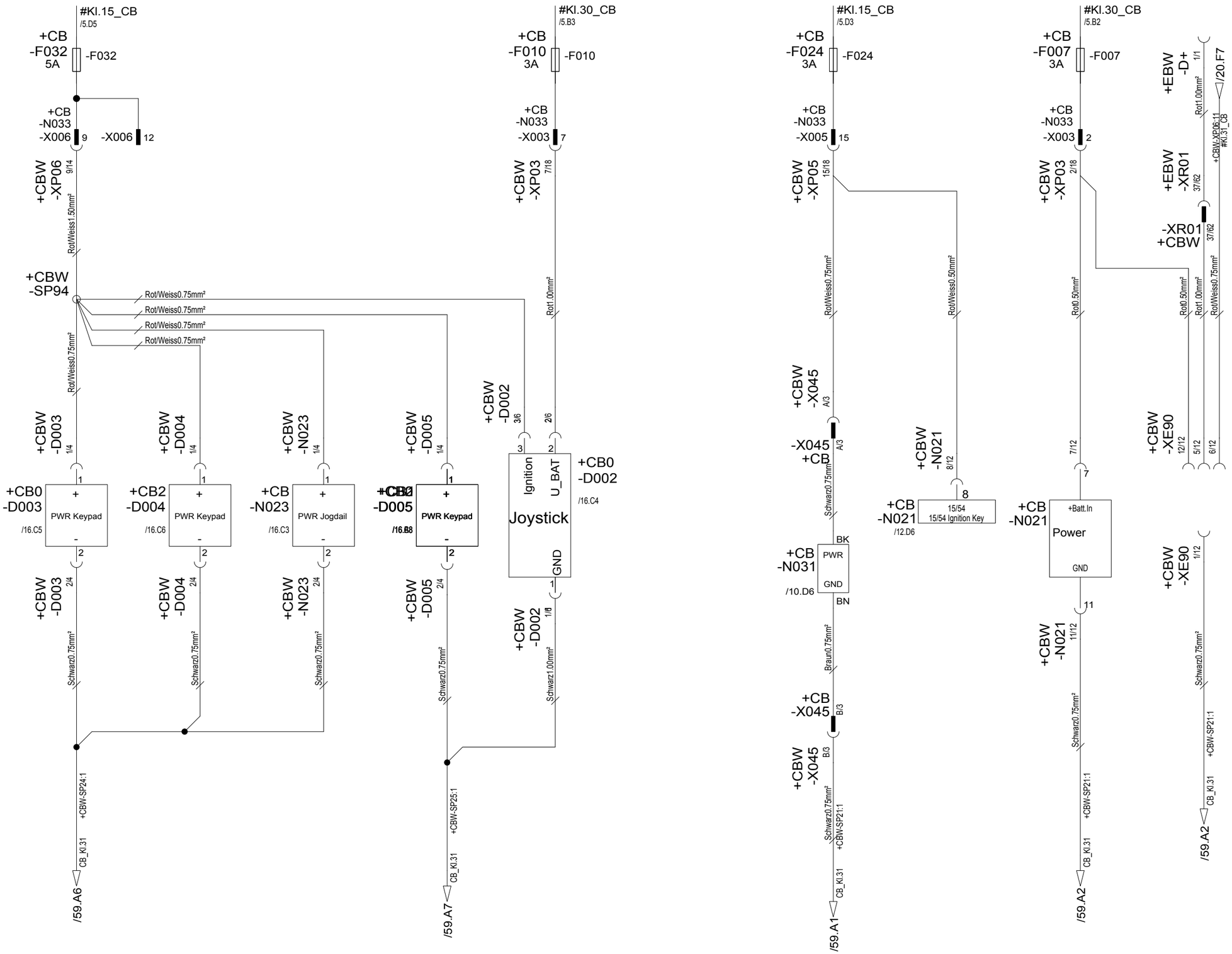

KRAMER
Kramer Werke GmbH
Wacker Neuson Straße 1 / D- 88630 Pfullendorf
Tel.: +49 (0) 7552 9288 -0
Fax: +49 (0) 7552 9288 -49

Diese Zeichnung darf ohne unsere ausdrückliche Genehmigung weder vervielfältigt, noch dritten Personen oder Mitbewerbern im Original oder als Kopie ausgehändigt werden. Eigentums- und Urheberrecht vorbehalten.

	date	name
User		Inzstuea1
Proved	20.06.2016	Inzkraum
Reading station		

Supply Control valve

Mat.-Nr. 1000364531 Doc.-Nr. 2060093317

Revision	03
Ersetzt Version	02
Gewicht in [kg]	

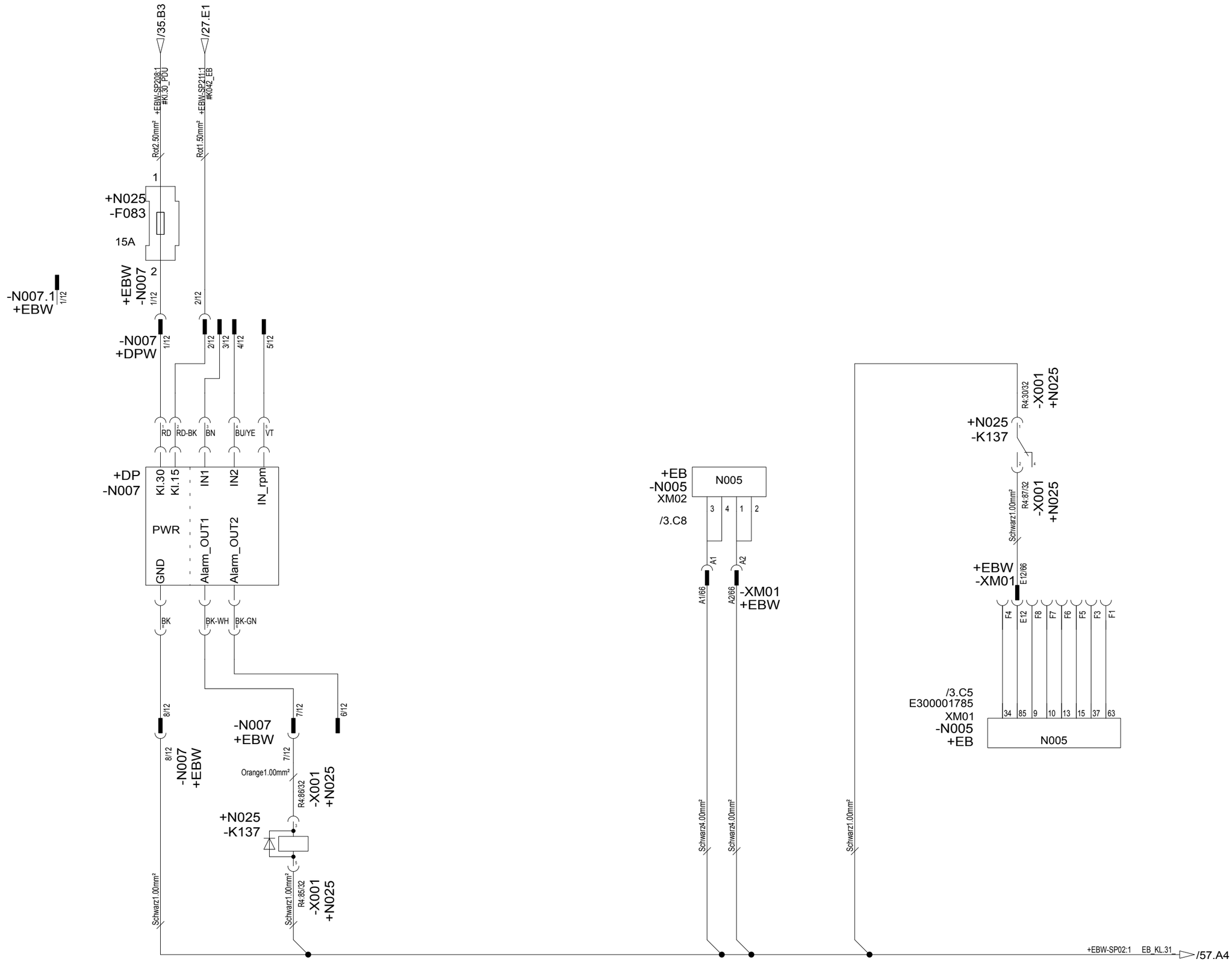

KRAMER
Kramer Werke GmbH
Wacker Neuson Straße 1 / D- 88630 Pfullendorf
Tel.: +49 (0) 7552 9288 -0
Fax: +49 (0) 7552 9288 -49

Diese Zeichnung darf ohne unsere ausdrückliche Genehmigung weder vervielfältigt, noch dritten Personen oder Mitbewerbern im Original oder als Kopie ausgehändigt werden. Eigentums- und Urheberrecht vorbehalten.

	date	name
User		lnzkraum
Proved	20.06.2016	lnzkraum
Reading station		

Diesel particulate filter external

Mat.-Nr. 1000364531 Doc.-Nr. 2060093317

Revision	03
Ersetzt Version	02
Gewicht in [kg]	

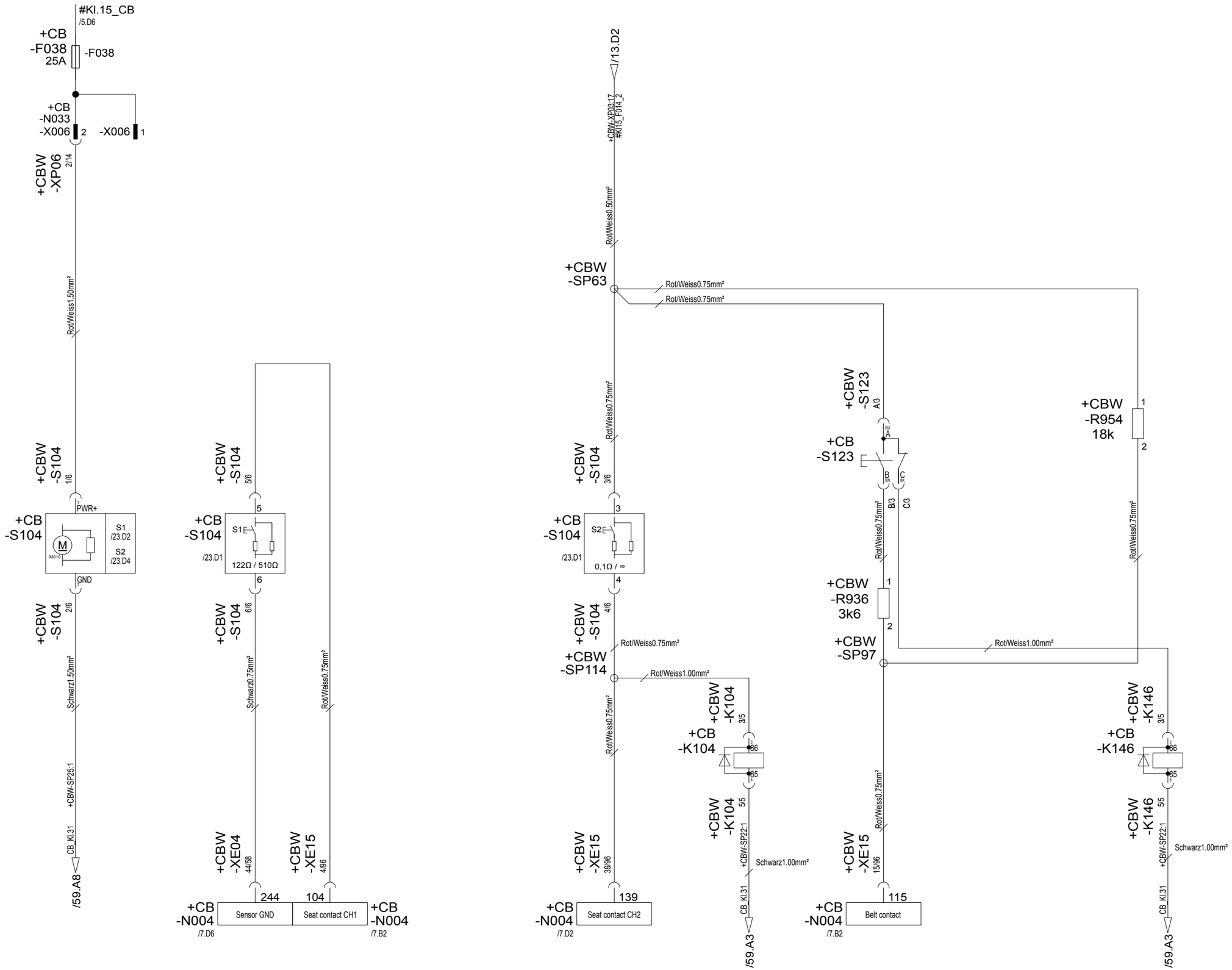

KRAMER
Kramer Werke GmbH
Wacker Neuson Straße 1 / D- 88630 Pfullendorf
Tel.: +49 (0) 7552 9288 -0
Fax: +49 (0) 7552 9288 -49

Diese Zeichnung darf ohne unsere ausdrückliche Genehmigung weder vervielfältigt, noch dritten Personen oder Mitbewerbern im Original oder als Kopie ausgehändigt werden. Eigentums- und Urheberrecht vorbehalten.

	date	name
User		Inzschwn
Proved	20.06.2016	Inzkraum
Reading station		

Operator seat

Mat.-Nr. 1000364531

Doc.-Nr. 2060093317

Revision	03
Ersetzt Version	02
Gewicht in [kg]	

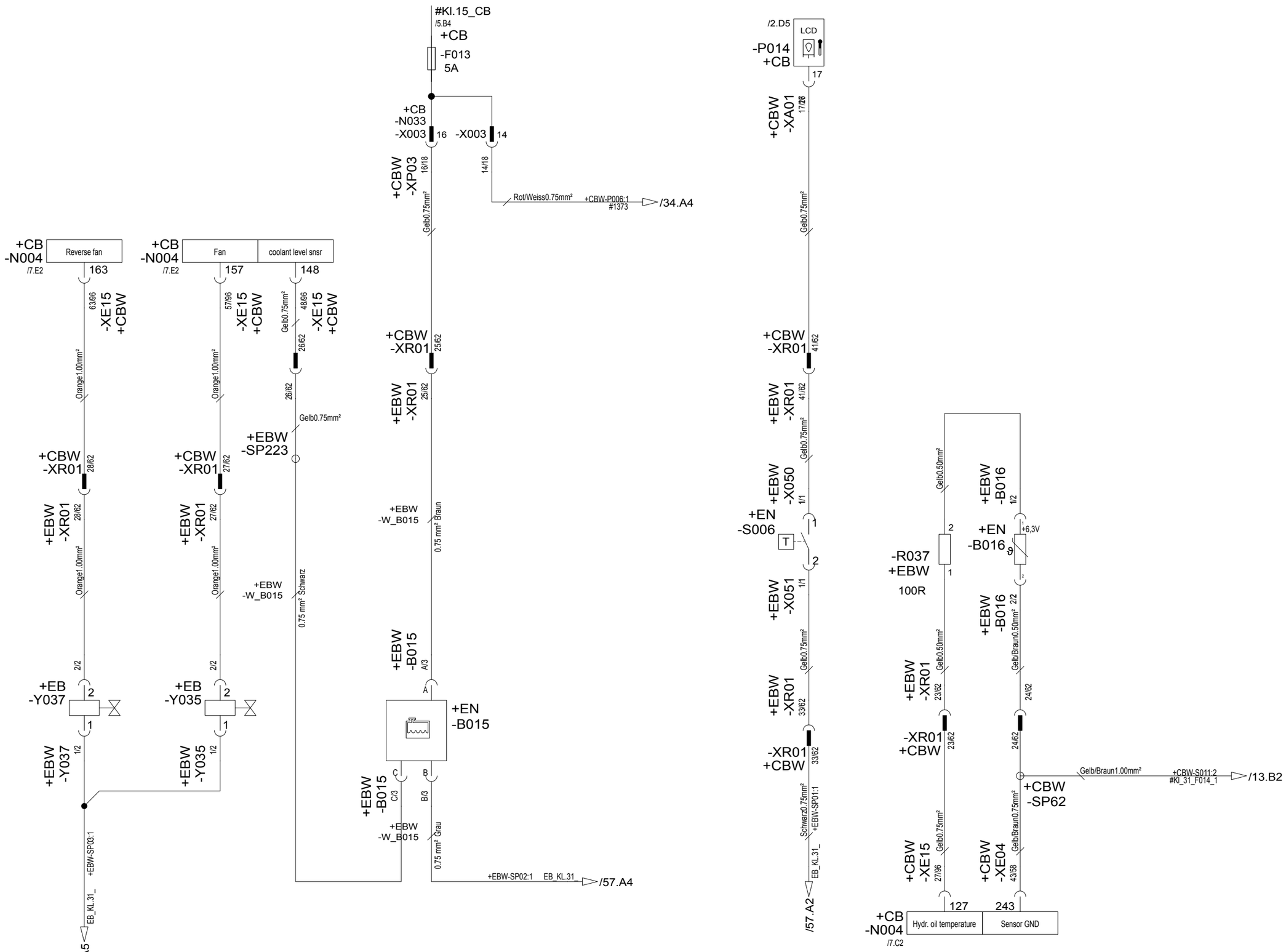

KRAMER
Kramer Werke GmbH
Wacker Neuson Straße 1 / D- 88630 Pfullendorf
Tel.: +49 (0) 7552 9288 -0
Fax: +49 (0) 7552 9288 -49

Diese Zeichnung darf ohne unsere ausdrückliche Genehmigung weder vervielfältigt, noch dritten Personen oder Mitbewerbern im Original oder als Kopie ausgehändigt werden. Eigentums- und Urheberrecht vorbehalten.

	date	name
User		Inzschwn
Proved	20.06.2016	Inzkraum
Reading station		

Diesel engine Cooling

Mat.-Nr. 1000364531 Doc.-Nr. 2060093317

Revision	03
Ersetzt Version	02
Gewicht in [kg]	

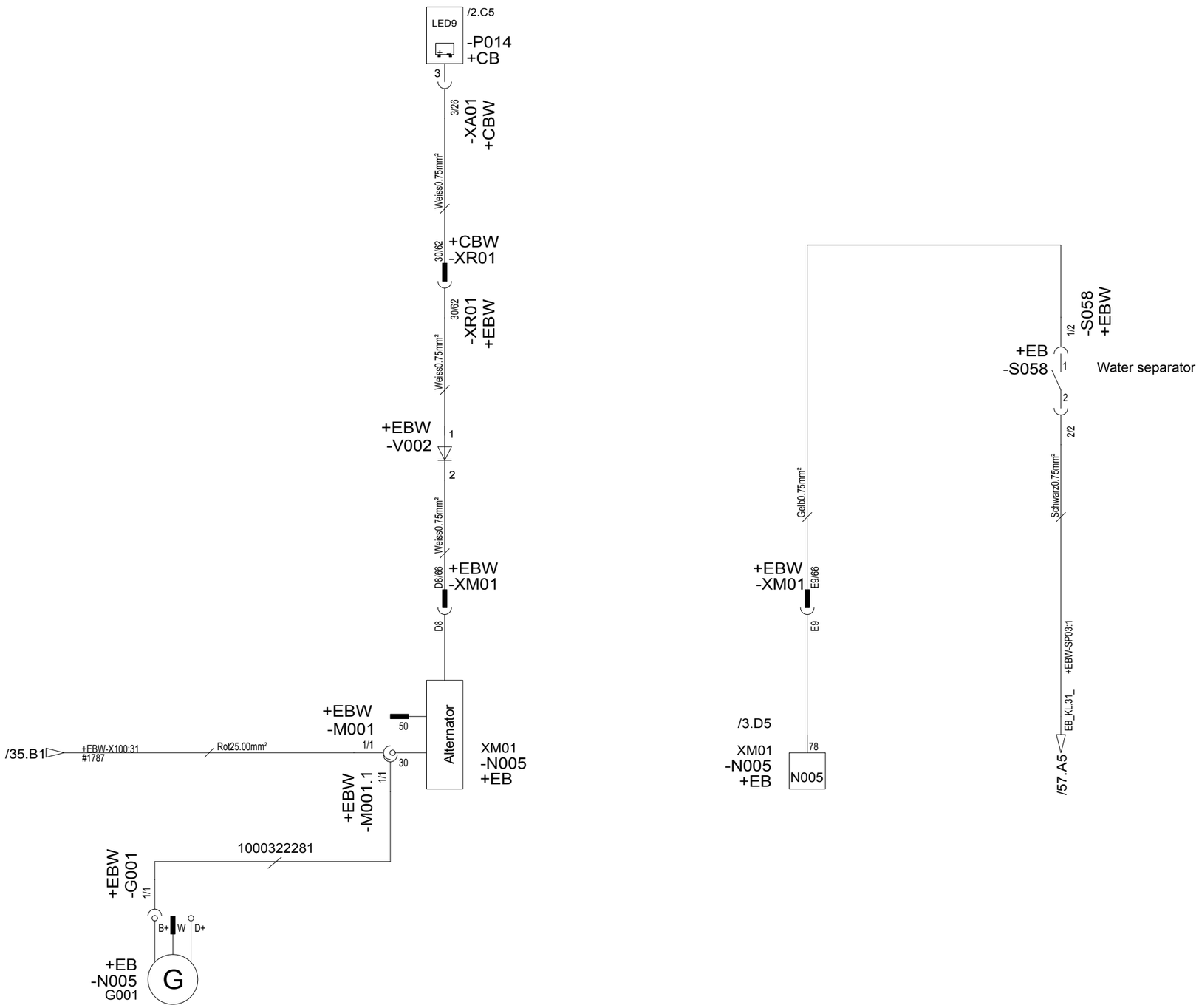

KRAMER
Kramer Werke GmbH
Wacker Neuson Straße 1 / D- 88630 Pfullendorf
Tel.: +49 (0) 7552 9288 -0
Fax: +49 (0) 7552 9288 -49

Diese Zeichnung darf ohne unsere ausdrückliche Genehmigung weder vervielfältigt, noch dritten Personen oder Mitbewerbern im Original oder als Kopie ausgehändigt werden. Eigentums- und Urheberrecht vorbehalten.

	date	name
User		Inzstuea1
Proved	20.06.2016	Inzkraum
Reading station		

Diesel engine parts

Mat.-Nr. 1000364531 Doc.-Nr. 2060093317

Revision	03
Ersetzt Version	02
Gewicht in [kg]	

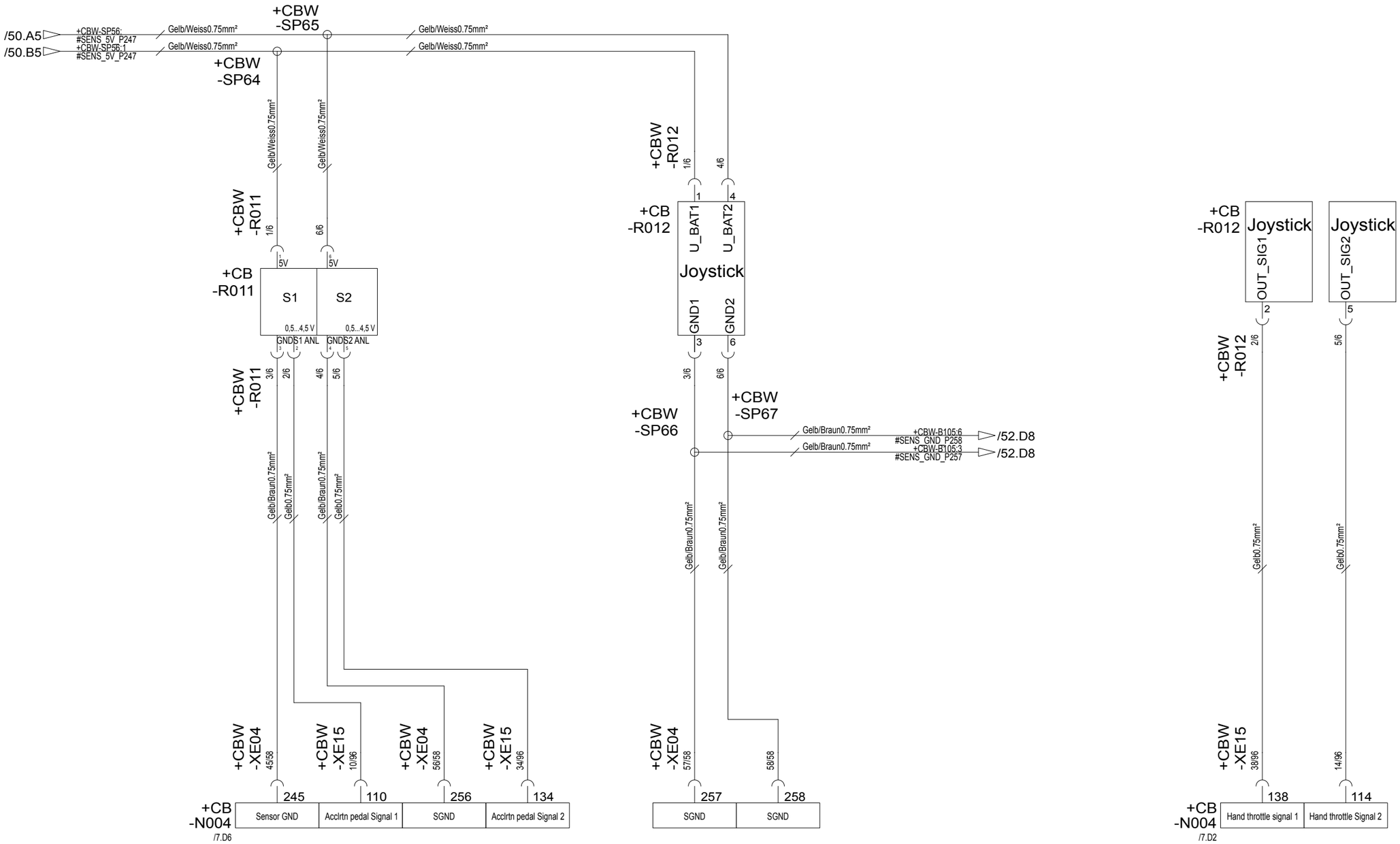

KRAMER
Kramer Werke GmbH
Wacker Neuson Straße 1 / D- 88630 Pfullendorf
Tel.: +49 (0) 7552 9288 -0
Fax: +49 (0) 7552 9288 -49

Diese Zeichnung darf ohne unsere ausdrückliche Genehmigung weder vervielfältigt, noch dritten Personen oder Mitbewerbern im Original oder als Kopie ausgehändigt werden. Eigentums- und Urheberrecht vorbehalten.

	date	name
User		Inzschwn
Proved	20.06.2016	Inzkraum
Reading station		

Diesel engine RPM throttle

Mat.-Nr. 1000364531 Doc.-Nr. 2060093317

Revision	03
Ersetzt Version	02
Gewicht in [kg]	

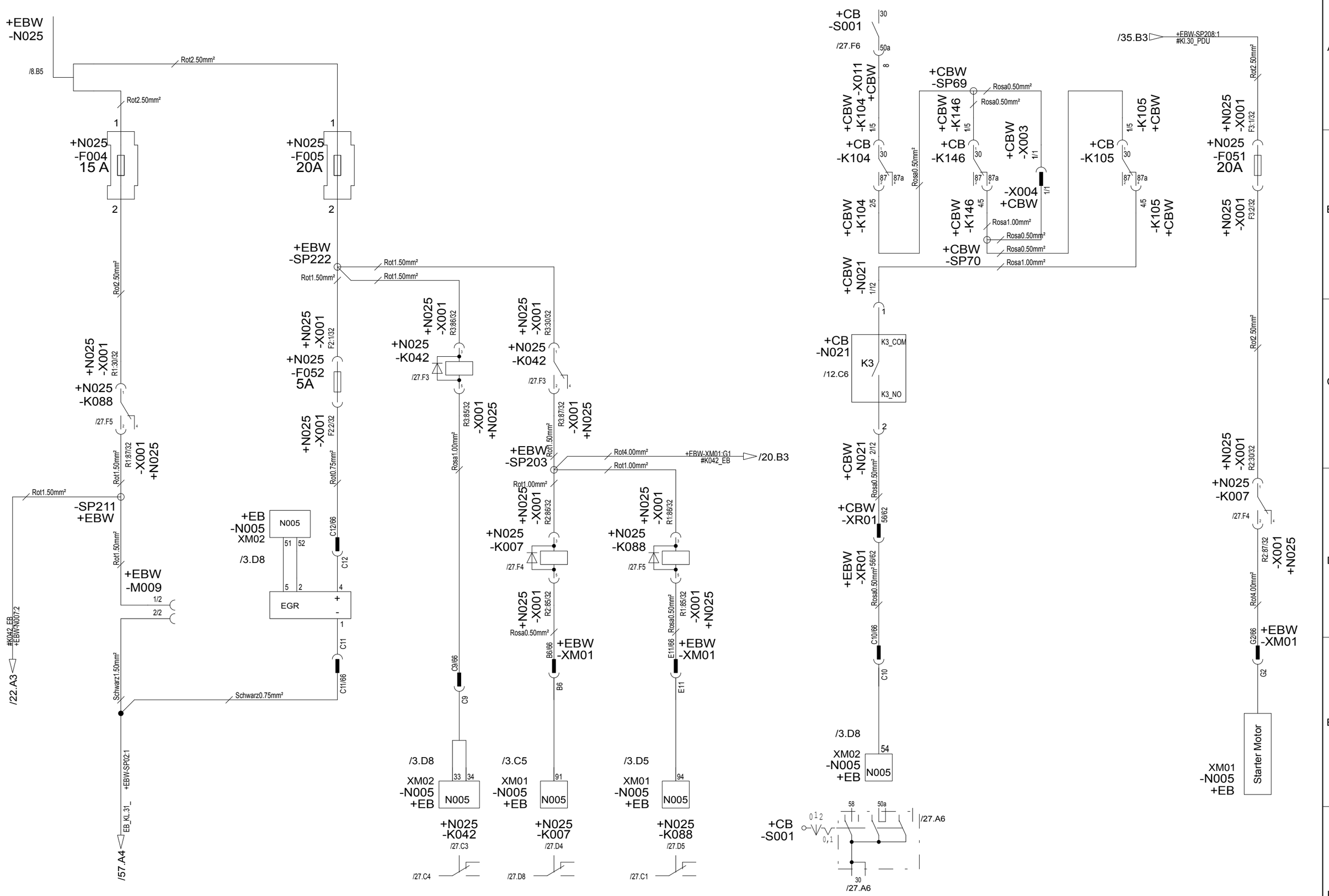

KRAMER
Kramer Werke GmbH
Wacker Neuson Straße 1 / D- 88630 Pfullendorf
Tel.: +49 (0) 7552 9288 -0
Fax: +49 (0) 7552 9288 -49

Diese Zeichnung darf ohne unsere ausdrückliche Genehmigung weder vervielfältigt, noch dritten Personen oder Mitbewerbern im Original oder als Kopie ausgehändigt werden. Eigentums- und Urheberrecht vorbehalten.

	date	name
User		Inzschwn
Proved	20.06.2016	Inzkraum
Reading station		

Diesel engine Start

Mat.-Nr. 1000364531 Doc.-Nr. 2060093317

Revision	03
Ersetzt Version	02
Gewicht in [kg]	

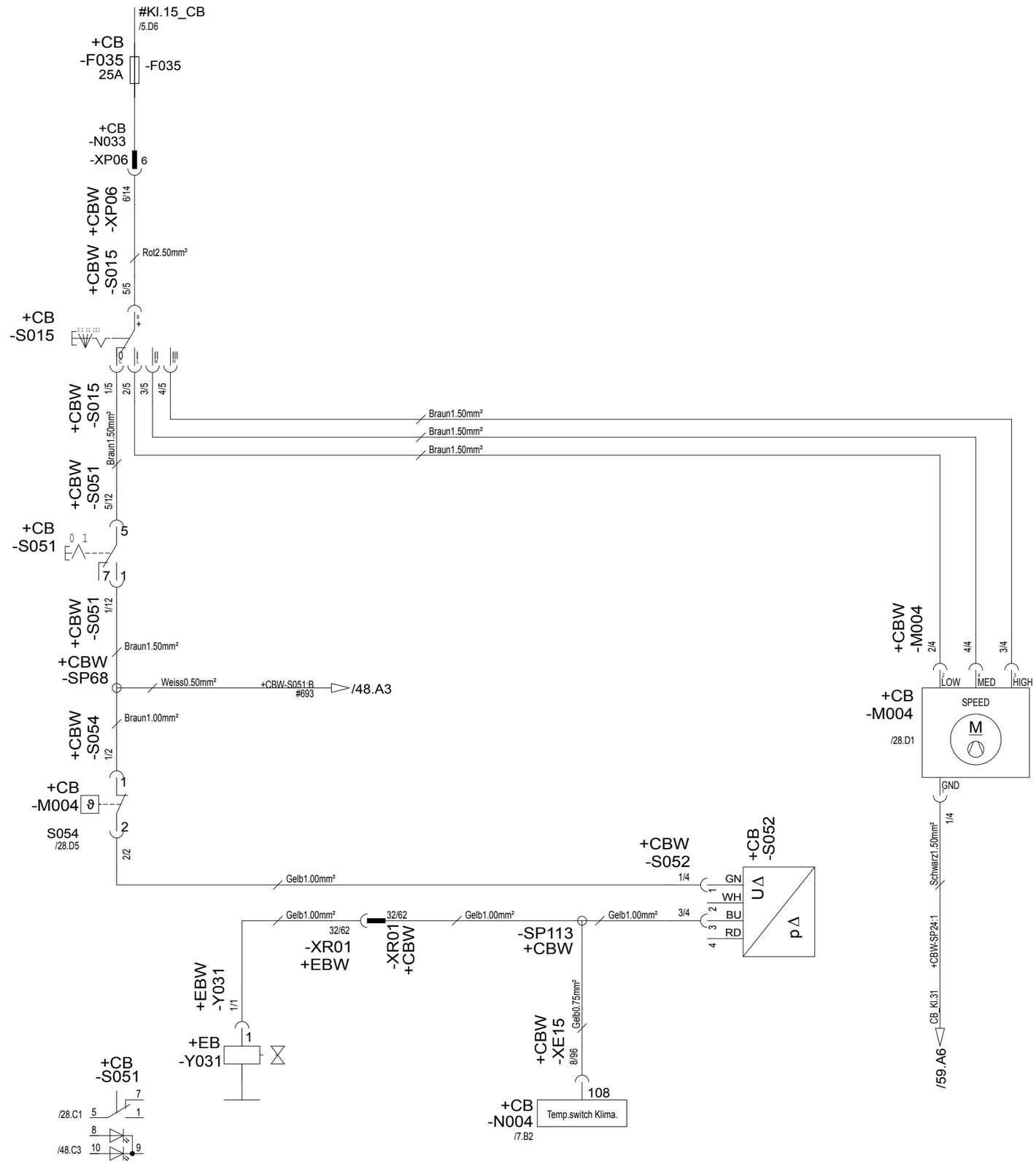

KRAMER
Kramer Werke GmbH
Wacker Neuson Straße 1 / D- 88630 Pfullendorf
Tel.: +49 (0) 7552 9288 -0
Fax: +49 (0) 7552 9288 -49

Diese Zeichnung darf ohne unsere ausdrückliche Genehmigung weder vervielfältigt, noch dritten Personen oder Mitbewerbern im Original oder als Kopie ausgehändigt werden. Eigentums- und Urheberrecht vorbehalten.

	date	name
User		Inzschwn
Proved	20.06.2016	Inzkraum
Reading station		

heating and Air conditioning

Mat.-Nr. 1000364531 Doc.-Nr. 2060093317

Revision	03
Ersetzt Version	02
Gewicht in [kg]	

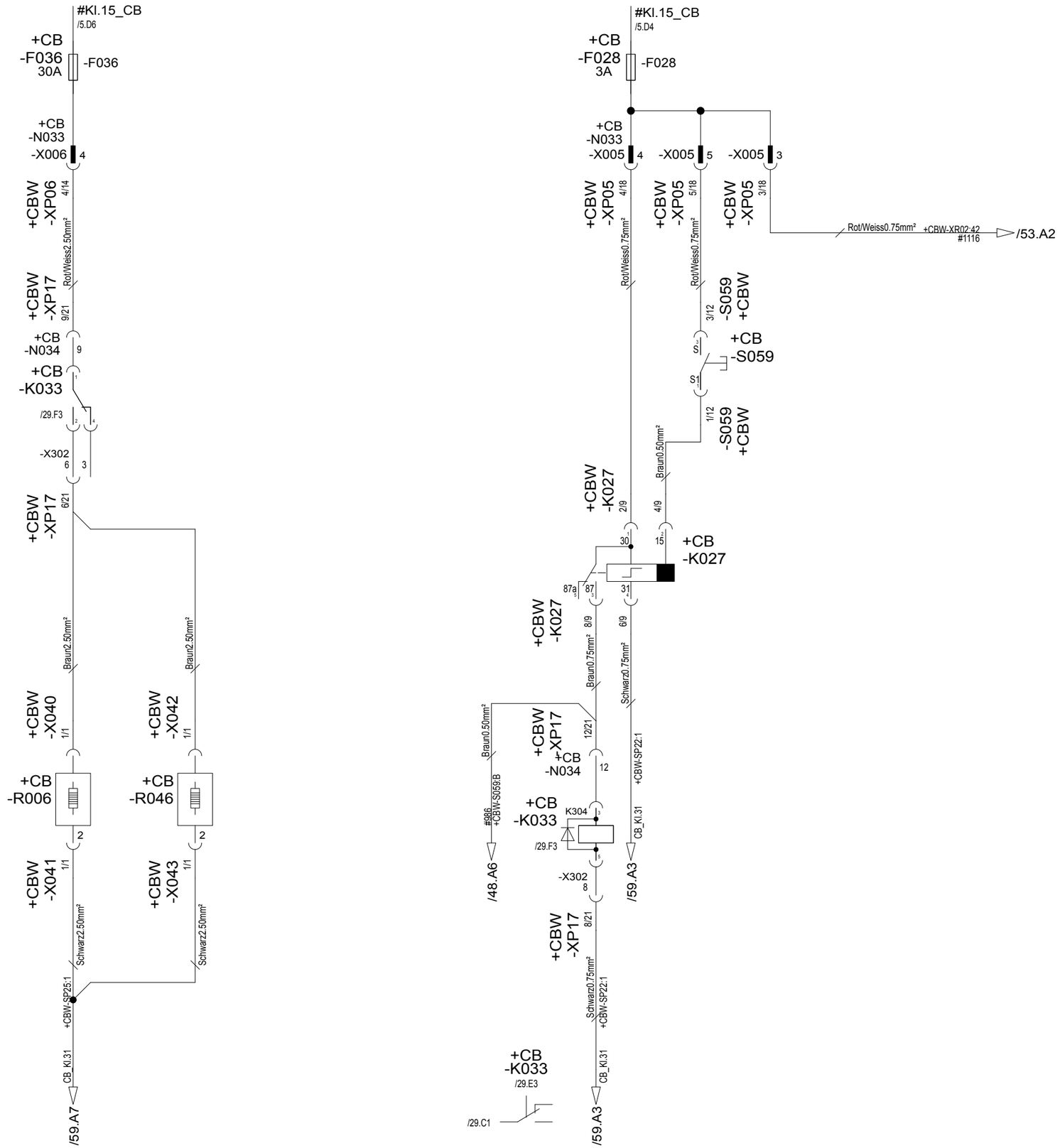

KRAMER
Kramer Werke GmbH
Wacker Neuson Straße 1 / D- 88630 Pfullendorf
Tel.: +49 (0) 7552 9288 -0
Fax: +49 (0) 7552 9288 -49

Diese Zeichnung darf ohne unsere ausdrückliche Genehmigung weder vervielfältigt, noch dritten Personen oder Mitbewerbern im Original oder als Kopie ausgehändigt werden. Eigentums- und Urheberrecht vorbehalten.

	date	name
User		Inzschwn
Proved	20.06.2016	Inzkraum
Reading station		

Window heating

Mat. -Nr. 1000364531

Doc. -Nr. 2060093317

Revision	03
Ersetzt Version	02
Gewicht in [kg]	

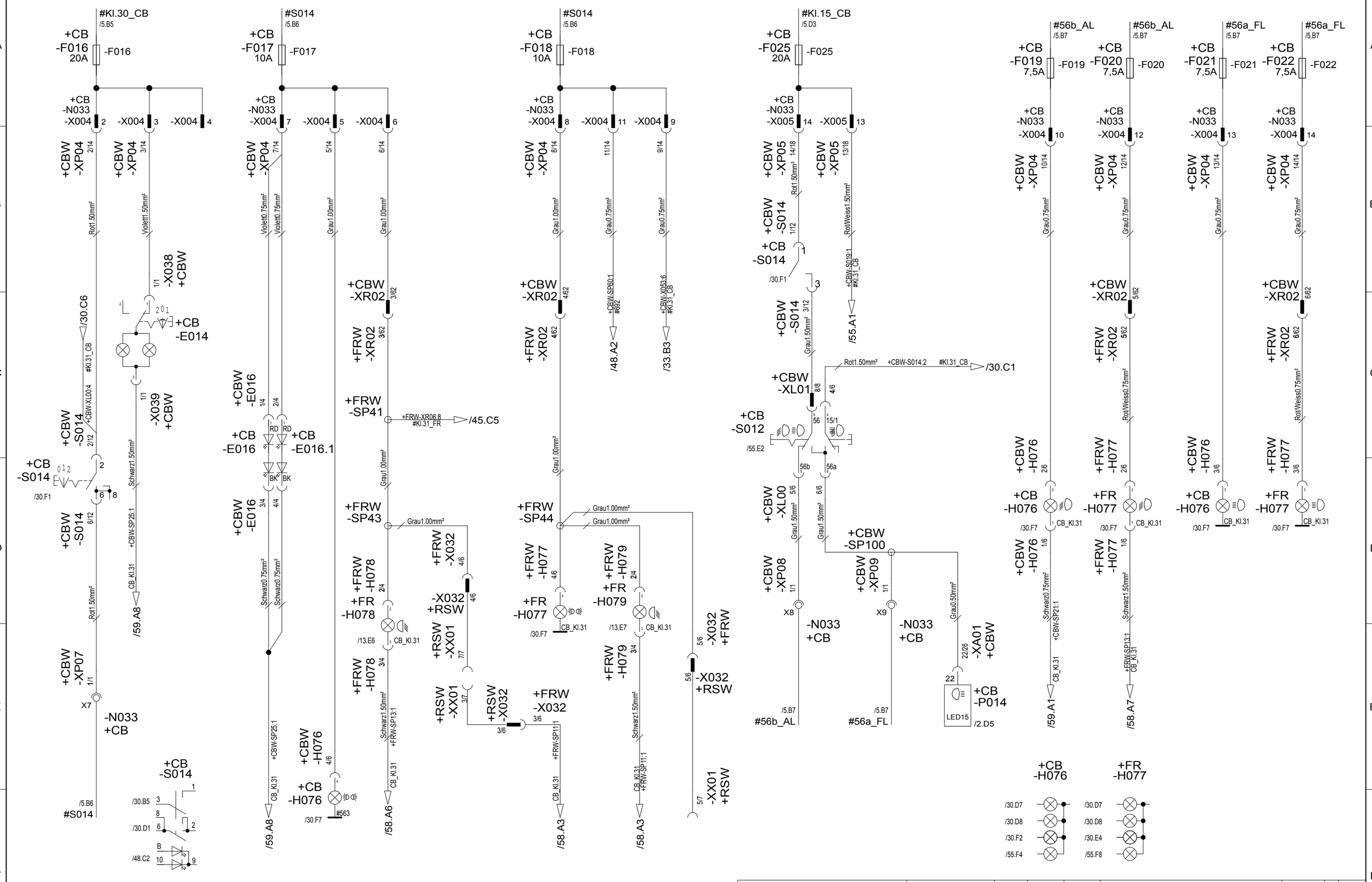

KRAMER
Kramer Werke GmbH
Wacker Neuson Straße 1 / D- 88630 Pfullendorf
Tel.: +49 (0) 7552 9288 -0
Fax: +49 (0) 7552 9288 -49

Diese Zeichnung darf ohne unsere ausdrückliche Genehmigung weder vervielfältigt, noch dritten Personen oder Mitbewerbern im Original oder als Kopie ausgehändigt werden. Eigentums- und Urheberrecht vorbehalten.

	date	name
User		Inzschwn
Proved	20.06.2016	Inzkraum
Reading station		

illumination

Mat.-Nr. 1000364531 Doc.-Nr. 2060093317

Revision	03
Ersetzt Version	02
Gewicht in [kg]	

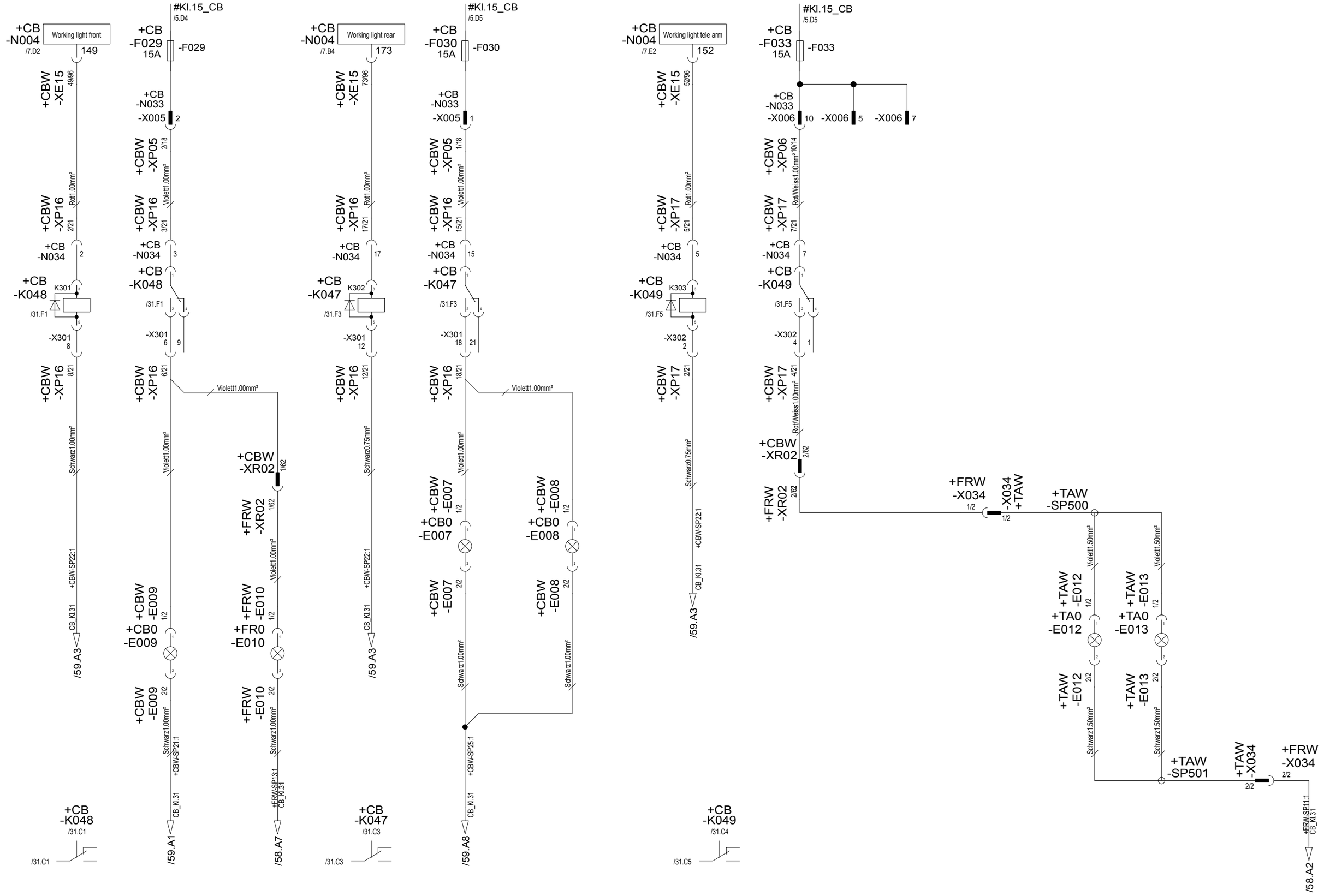

KRAMER
Kramer Werke GmbH
Wacker Neuson Straße 1 / D- 88630 Pfullendorf
Tel.: +49 (0) 7552 9288 -0
Fax: +49 (0) 7552 9288 -49

Diese Zeichnung darf ohne unsere ausdrückliche Genehmigung weder vervielfältigt, noch dritten Personen oder Mitbewerbern im Original oder als Kopie ausgehändigt werden. Eigentums- und Urheberrecht vorbehalten.

	date	name
User		Inzschwn
Proved	20.06.2016	Inzkraum
Reading station		

Working head lamps

Mat.-Nr. 1000364531 Doc.-Nr. 2060093317

Revision	03
Ersetzt Version	02
Gewicht in [kg]	

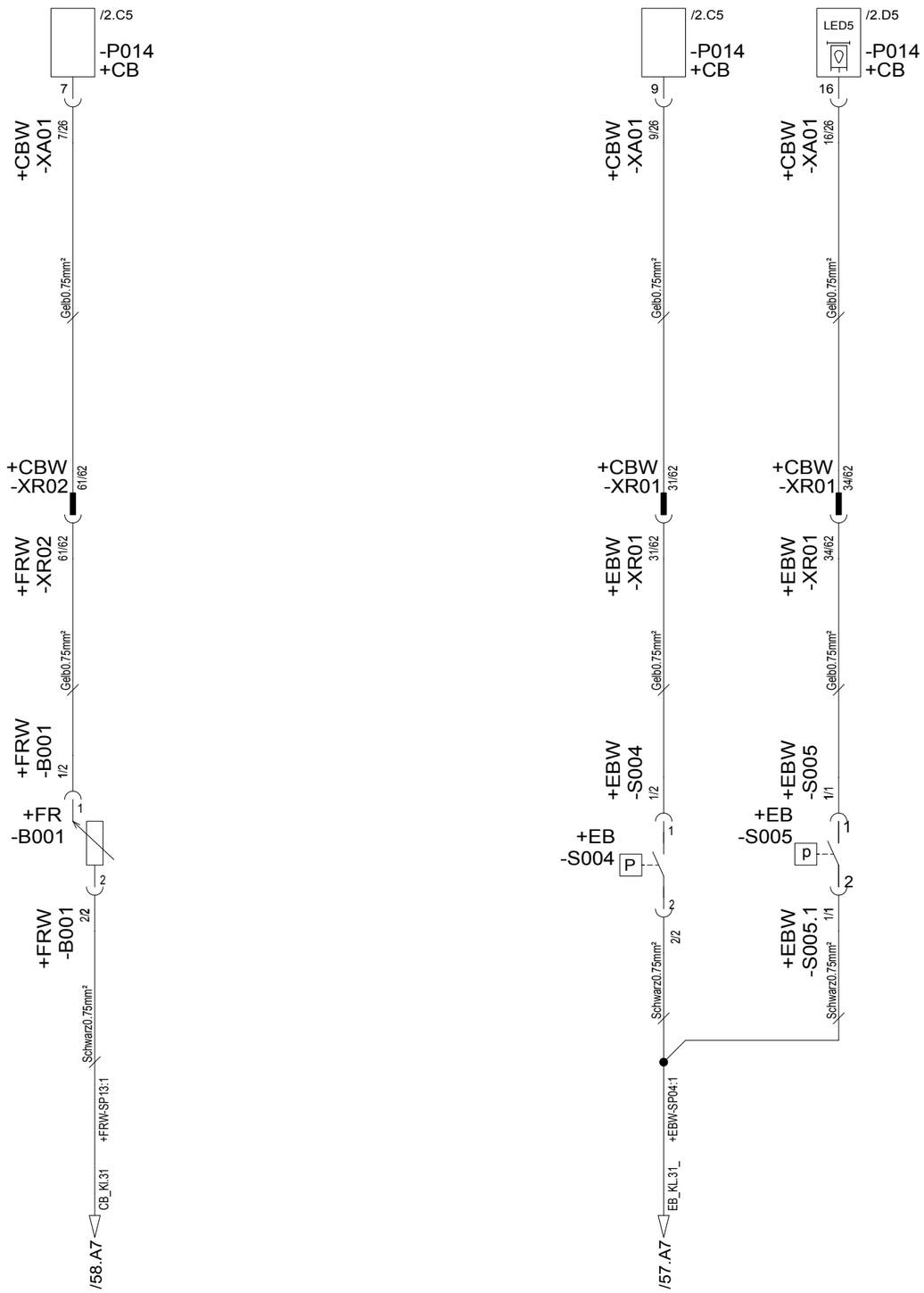

KRAMER
Kramer Werke GmbH
Wacker Neuson Straße 1 / D- 88630 Pfullendorf
Tel.: +49 (0) 7552 9288 -0
Fax: +49 (0) 7552 9288 -49

Diese Zeichnung darf ohne unsere ausdrückliche Genehmigung weder vervielfältigt, noch dritten Personen oder Mitbewerbern im Original oder als Kopie ausgehändigt werden. Eigentums- und Urheberrecht vorbehalten.

	date	name
User		Inzschwn
Proved	20.06.2016	Inzkraum
Reading station		

Indicating instrument

Mat.-Nr. 1000364531 Doc.-Nr. 2060093317

Revision	03
Ersetzt Version	02
Gewicht in [kg]	

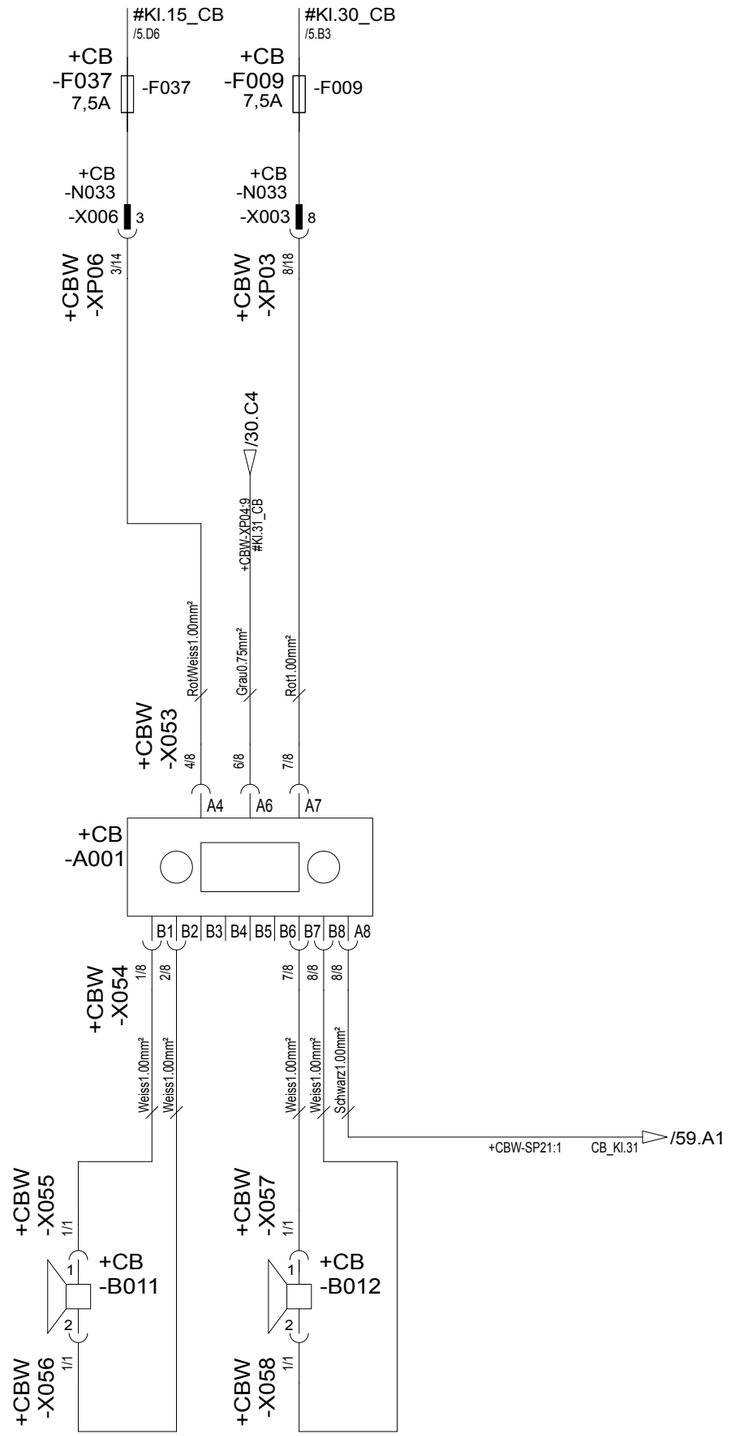

KRAMER
Kramer Werke GmbH
Wacker Neuson Straße 1 / D- 88630 Pfullendorf
Tel.: +49 (0) 7552 9288 -0
Fax: +49 (0) 7552 9288 -49

Diese Zeichnung darf ohne unsere ausdrückliche Genehmigung weder vervielfältigt, noch dritten Personen oder Mitbewerbern im Original oder als Kopie ausgehändigt werden. Eigentums- und Urheberrecht vorbehalten.

	date	name
User		Inzschwn
Proved	20.06.2016	Inzkraum
Reading station		

Radio

Mat.-Nr. 1000364531

Doc.-Nr. 2060093317

Revision	03
Ersetzt Version	02
Gewicht in [kg]	

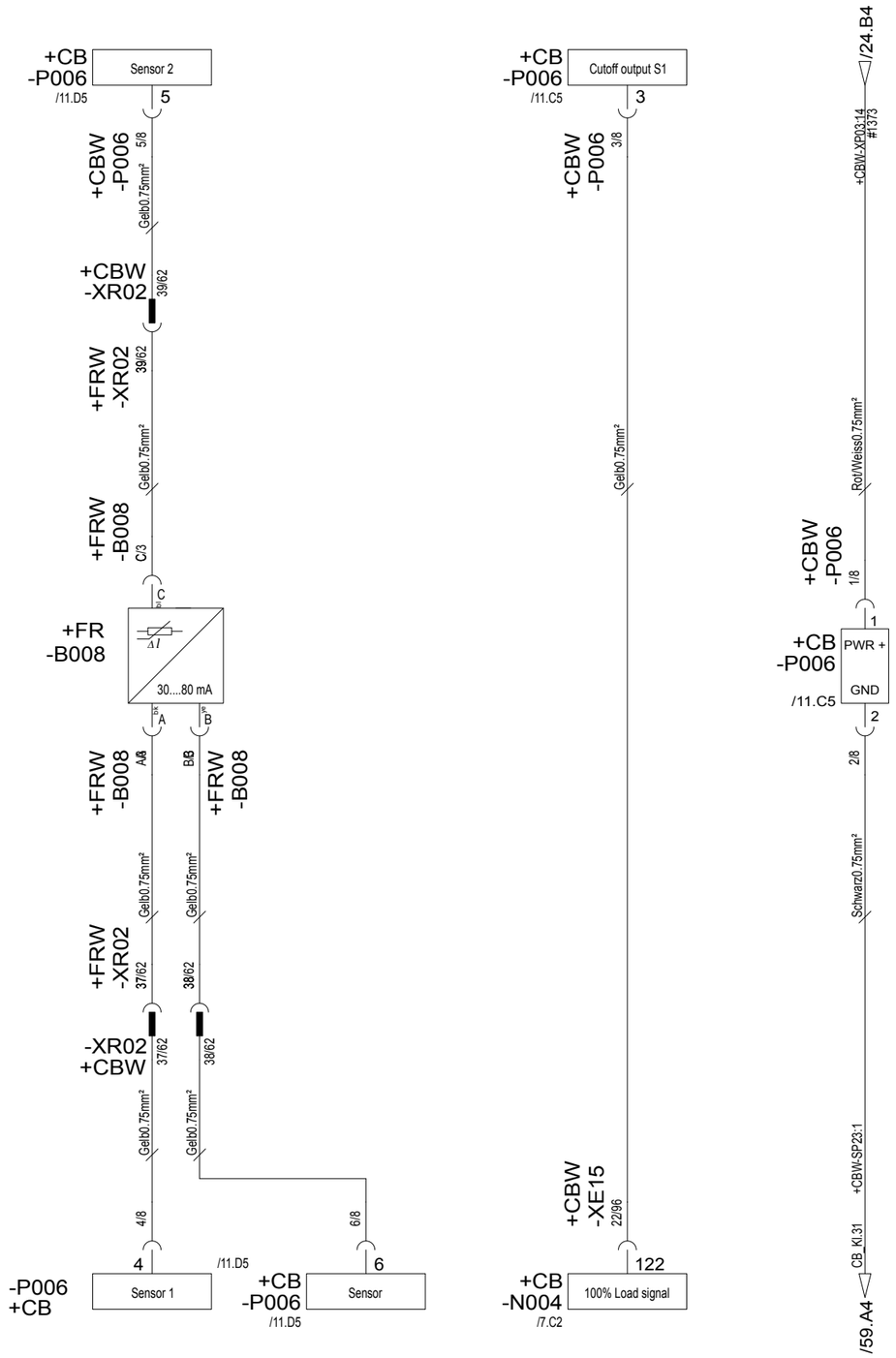

KRAMER
Kramer Werke GmbH
Wacker Neuson Straße 1 / D- 88630 Pfullendorf
Tel.: +49 (0) 7552 9288 -0
Fax: +49 (0) 7552 9288 -49

Diese Zeichnung darf ohne unsere ausdrückliche Genehmigung weder vervielfältigt, noch dritten Personen oder Mitbewerbern im Original oder als Kopie ausgehändigt werden. Eigentums- und Urheberrecht vorbehalten.

	date	name
User		Inzschwn
Proved	20.06.2016	Inzkraum
Reading station		

Safe load indicator system

Mat. -Nr. 1000364531

Doc. -Nr. 2060093317

Revision	03
Ersetzt Version	02
Gewicht in [kg]	

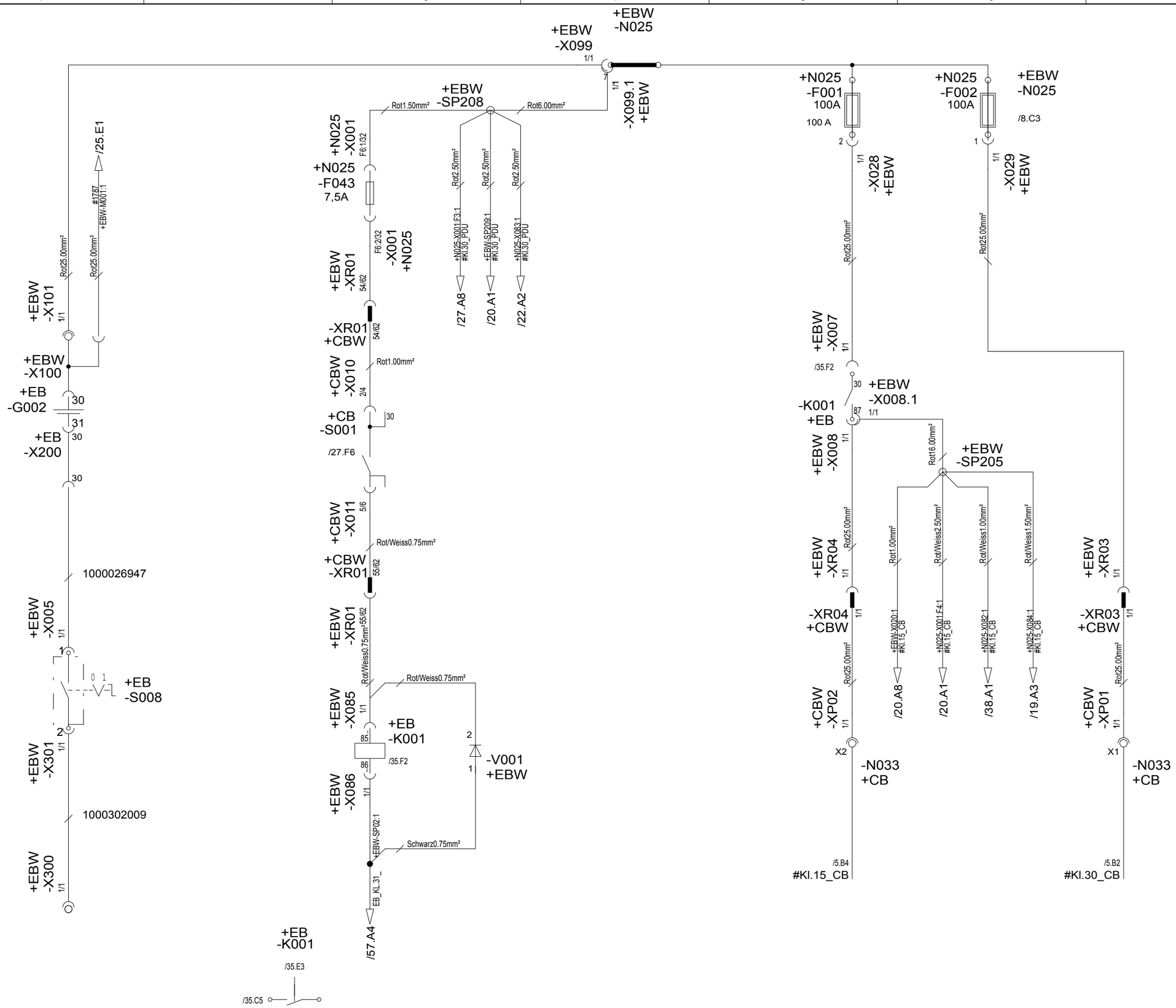

KRAMER
Kramer Werke GmbH
Wacker Neuson Straße 1 / D- 88630 Pfullendorf
Tel.: +49 (0) 7552 9288 -0
Fax: +49 (0) 7552 9288 -49

Diese Zeichnung darf ohne unsere ausdrückliche Genehmigung weder vervielfältigt, noch dritten Personen oder Mitbewerbern im Original oder als Kopie ausgehändigt werden. Eigentums- und Urheberrecht vorbehalten.

	date	name
User		
Proved	20.06.2016	Inzkraum
Reading station		

Electrical power supply

Mat.-Nr. 1000364531 Doc.-Nr. 2060093317

Revision	03
Ersetzt Version	02
Gewicht in [kg]	

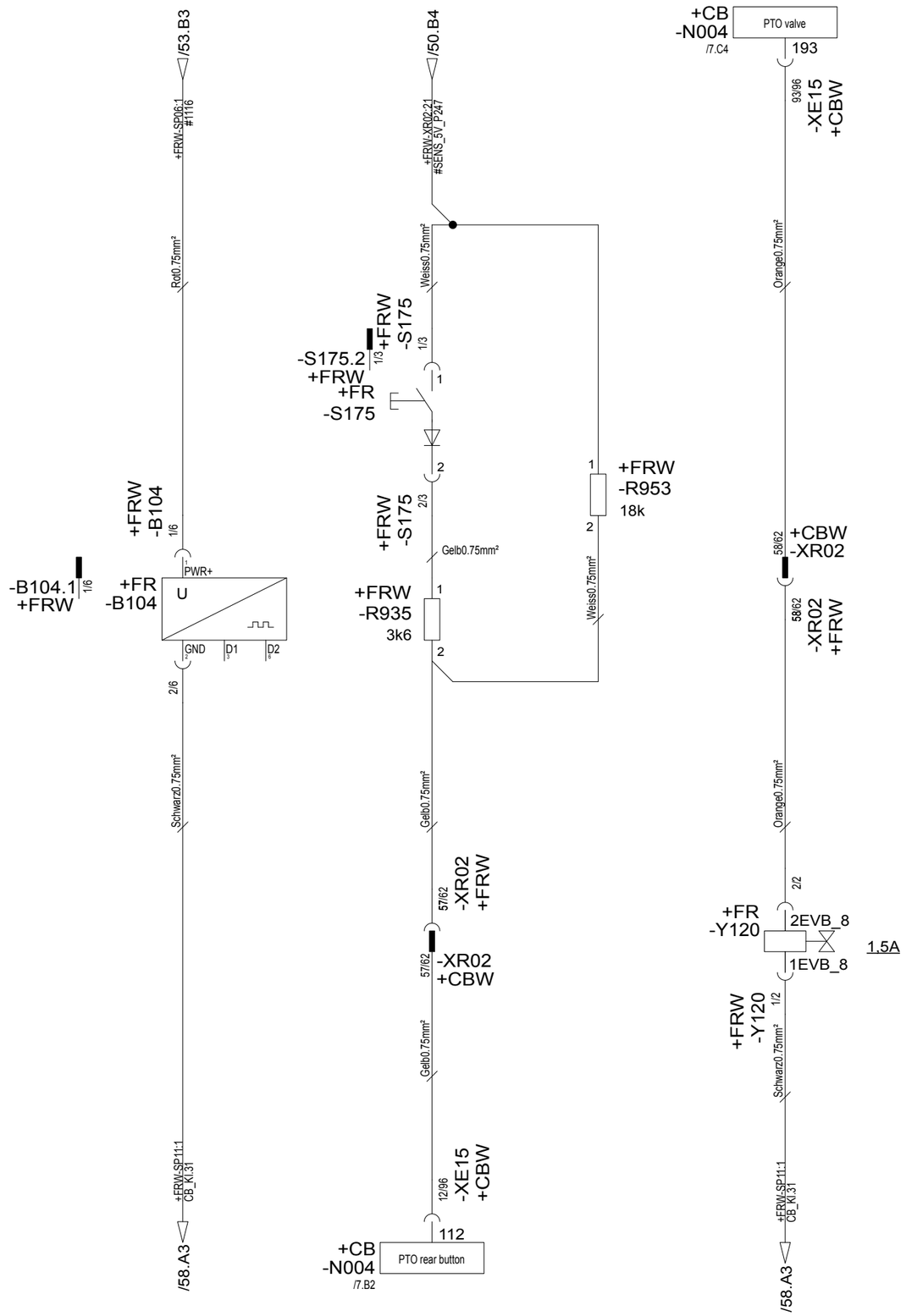

KRAMER
Kramer Werke GmbH
Wacker Neuson Straße 1 / D- 88630 Pfullendorf
Tel.: +49 (0) 7552 9288 -0
Fax: +49 (0) 7552 9288 -49

Diese Zeichnung darf ohne unsere ausdrückliche Genehmigung weder vervielfältigt, noch dritten Personen oder Mitbewerbern im Original oder als Kopie ausgehändigt werden. Eigentums- und Urheberrecht vorbehalten.

	date	name
User		Inzschwn
Proved	20.06.2016	Inzkraum
Reading station		

PTO shaft

Mat. -Nr. 1000364531

Doc. -Nr. 2060093317

Revision	03
Ersetzt Version	02
Gewicht in [kg]	

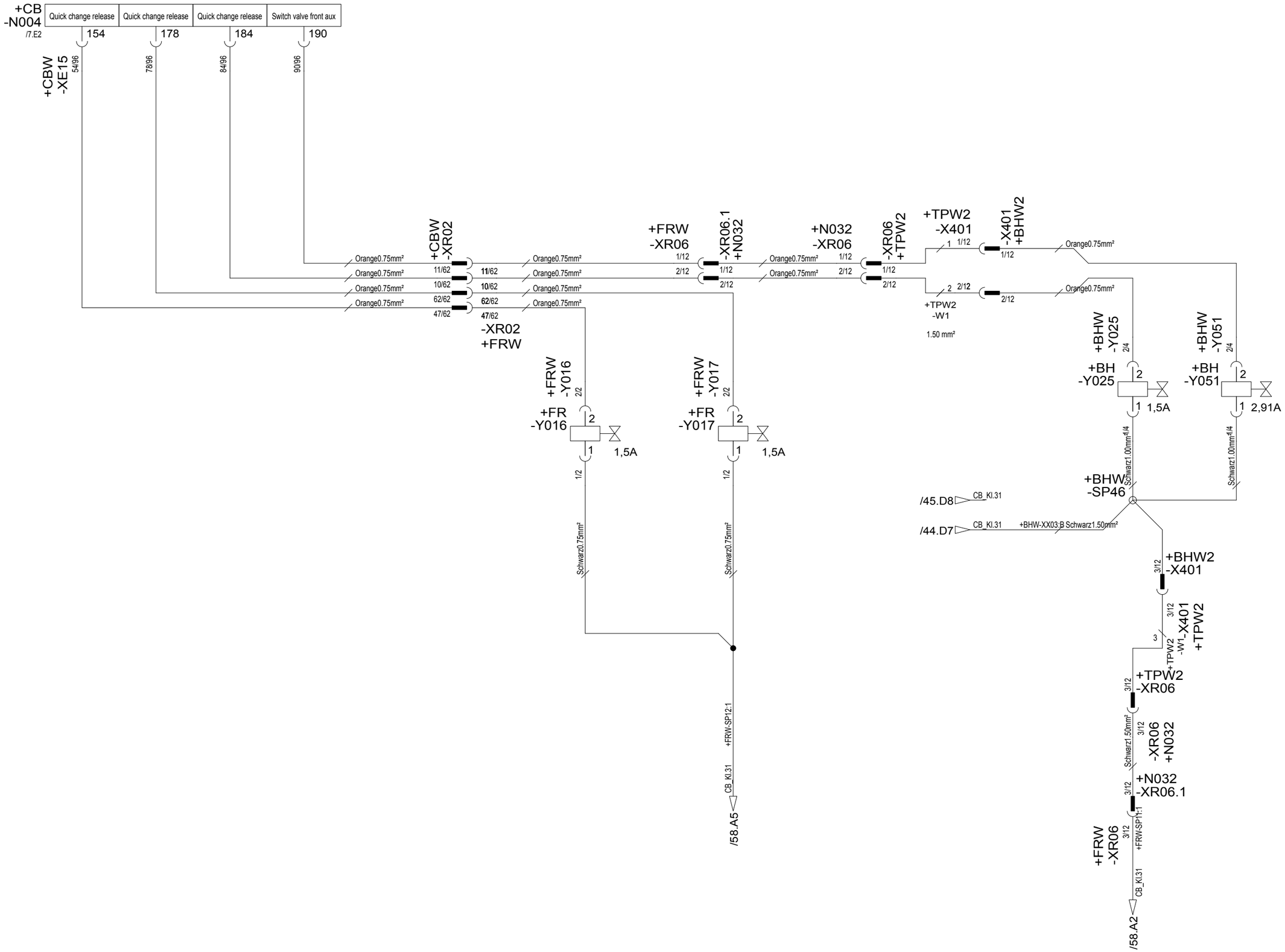

KRAMER
Kramer Werke GmbH
Wacker Neuson Straße 1 / D- 88630 Pfullendorf
Tel.: +49 (0) 7552 9288 -0
Fax: +49 (0) 7552 9288 -49

Diese Zeichnung darf ohne unsere ausdrückliche Genehmigung weder vervielfältigt, noch dritten Personen oder Mitbewerbern im Original oder als Kopie ausgehändigt werden. Eigentums- und Urheberrecht vorbehalten.

	date	name
User		Inzschwn
Proved	20.06.2016	Inzkraum
Reading station		

Quickhitch facility

Mat.-Nr. 1000364531

Doc.-Nr. 2060093317

Revision	03
Ersetzt Version	02
Gewicht in [kg]	

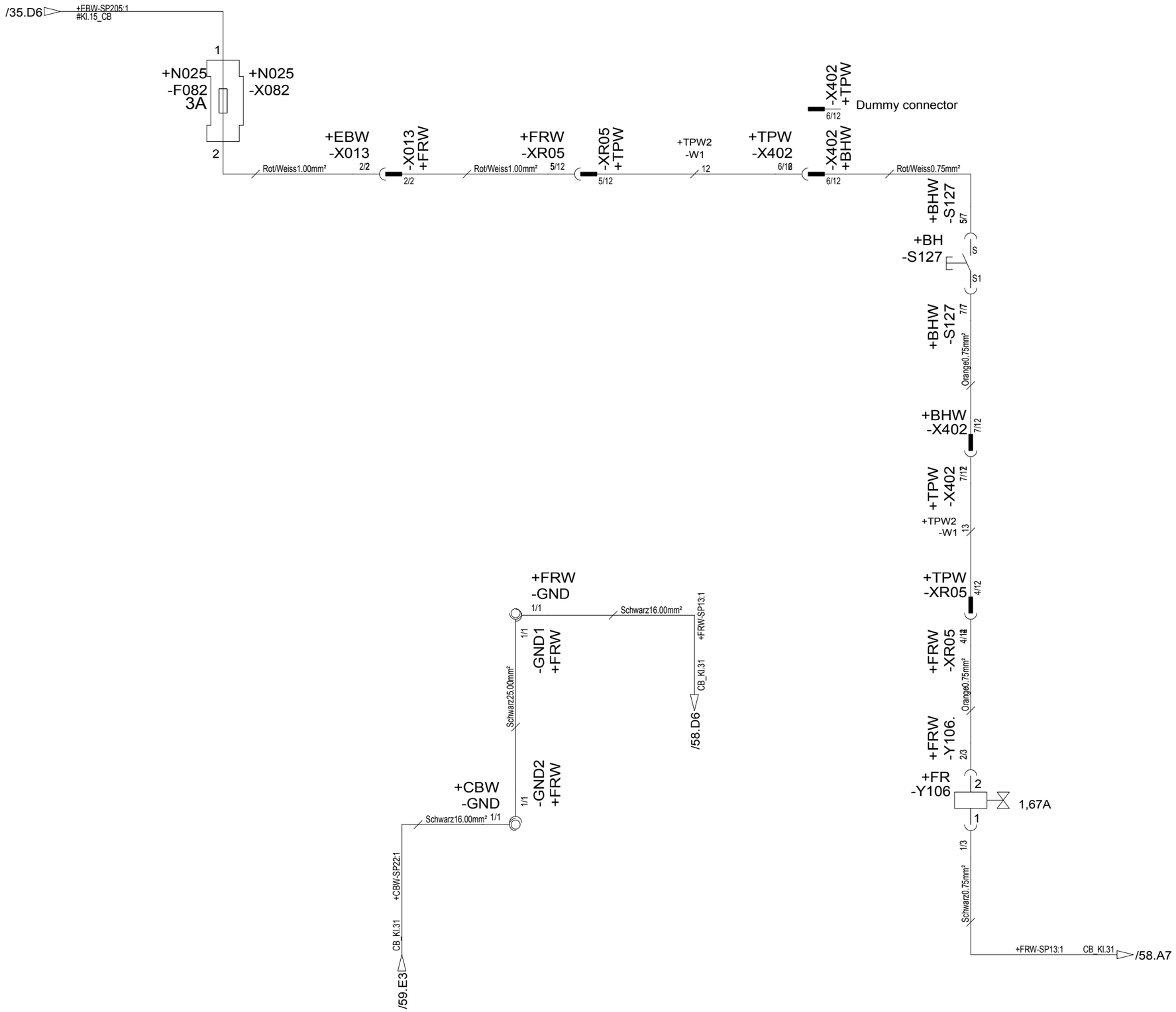

KRAMER
Kramer Werke GmbH
Wacker Neuson Straße 1 / D- 88630 Pfullendorf
Tel.: +49 (0) 7552 9288 -0
Fax: +49 (0) 7552 9288 -49

Diese Zeichnung darf ohne unsere ausdrückliche Genehmigung weder vervielfältigt, noch dritten Personen oder Mitbewerbern im Original oder als Kopie ausgehändigt werden. Eigentums- und Urheberrecht vorbehalten.

	date	name
User		Inzstuea1
Proved	20.06.2016	Inzkraum
Reading station		

Pressure relief

Mat. -Nr. 1000364531

Doc. -Nr. 2060093317

Revision	03
Ersetzt Version	02
Gewicht in [kg]	

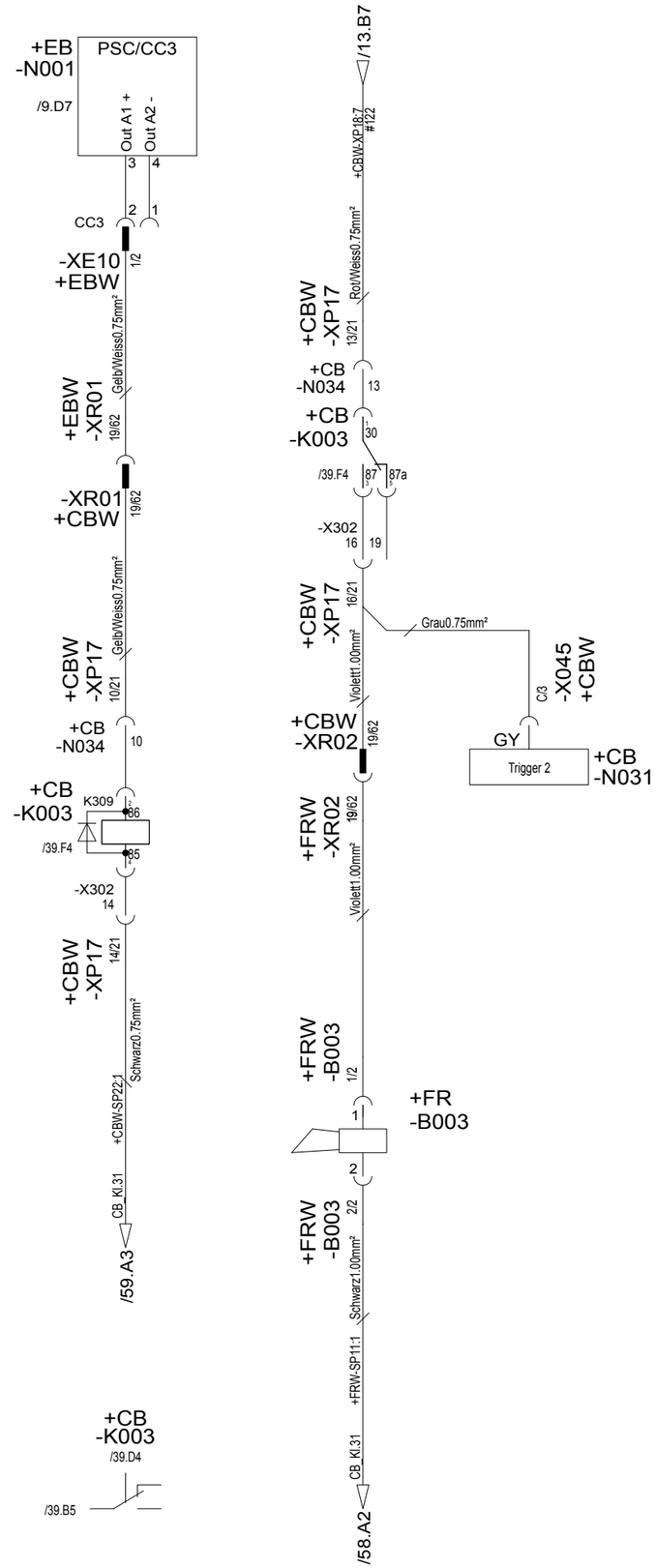

KRAMER
Kramer Werke GmbH
Wacker Neuson Straße 1 / D- 88630 Pfullendorf
Tel.: +49 (0) 7552 9288 -0
Fax: +49 (0) 7552 9288 -49

Diese Zeichnung darf ohne unsere ausdrückliche Genehmigung weder vervielfältigt, noch dritten Personen oder Mitbewerbern im Original oder als Kopie ausgehändigt werden. Eigentums- und Urheberrecht vorbehalten.

	date	name
User		
Proved	20.06.2016	Inzkraum
Reading station		

Reversing light

Mat.-Nr. 1000364531

Doc.-Nr. 2060093317

Revision	03
Ersetzt Version	02
Gewicht in [kg]	

A3

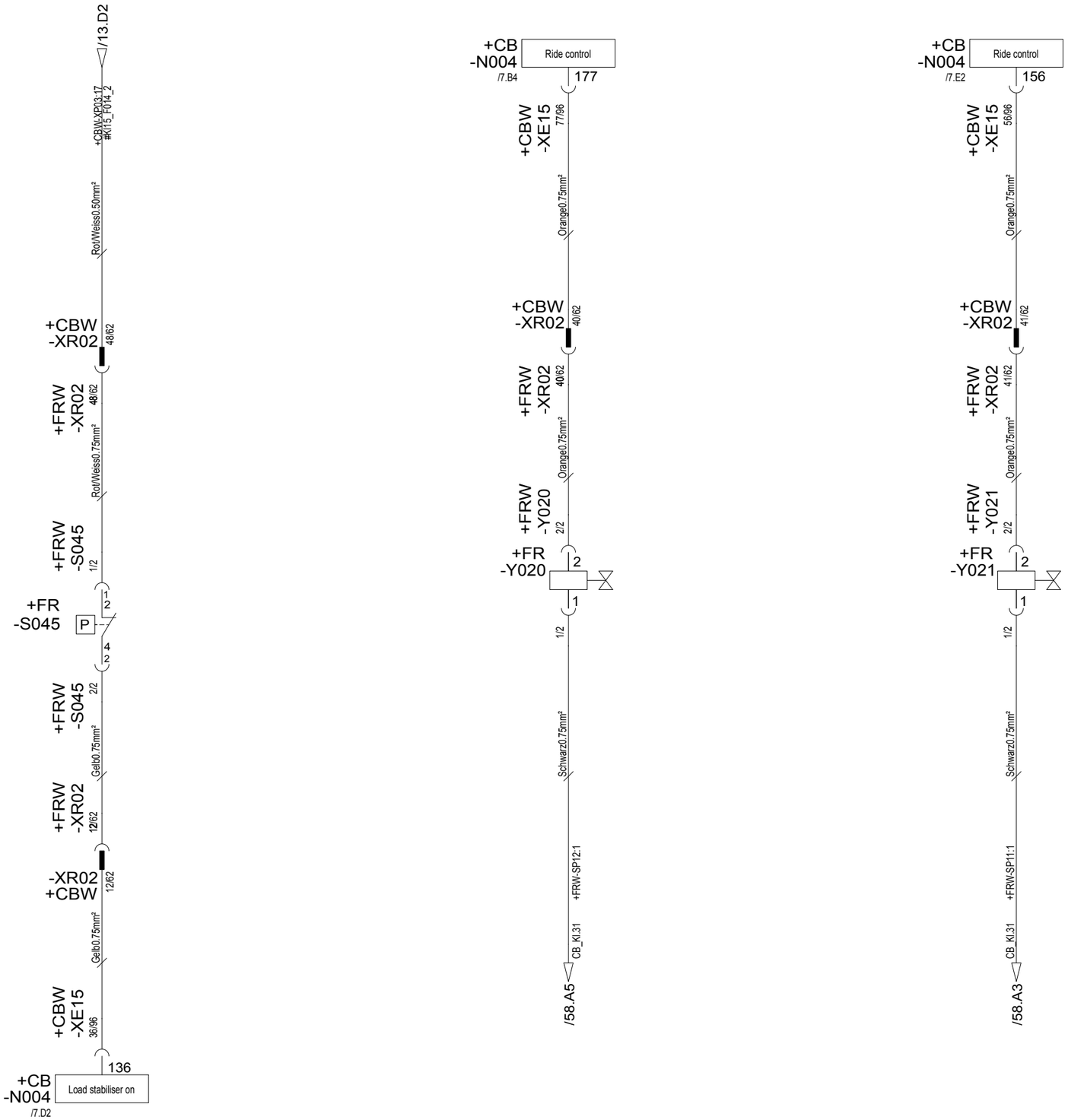

KRAMER
Kramer Werke GmbH
Wacker Neuson Straße 1 / D- 88630 Pfullendorf
Tel.: +49 (0) 7552 9288 -0
Fax: +49 (0) 7552 9288 -49

Diese Zeichnung darf ohne unsere ausdrückliche Genehmigung weder vervielfältigt, noch dritten Personen oder Mitbewerbern im Original oder als Kopie ausgehändigt werden. Eigentums- und Urheberrecht vorbehalten.

	date	name
User		Inzschwn
Proved	20.06.2016	Inzkraum
Reading station		

Load stabiliser

Mat. -Nr. 1000364531

Doc. -Nr. 2060093317

Revision	03
Ersetzt Version	02
Gewicht in [kg]	

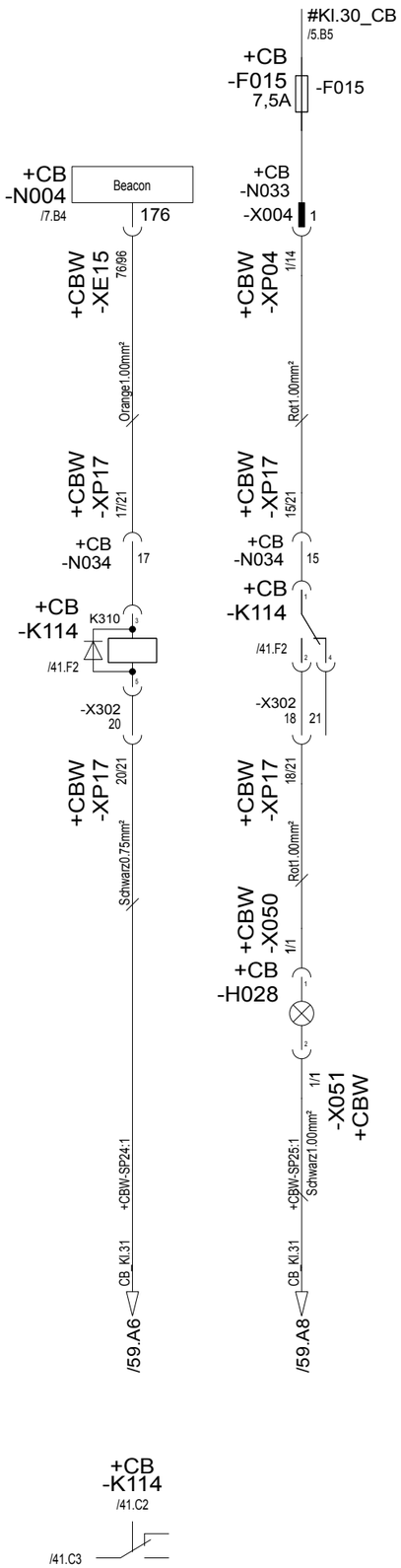

KRAMER
Kramer Werke GmbH
Wacker Neuson Straße 1 / D- 88630 Pfullendorf
Tel.: +49 (0) 7552 9288 -0
Fax: +49 (0) 7552 9288 -49

Diese Zeichnung darf ohne unsere ausdrückliche Genehmigung weder vervielfältigt, noch dritten Personen oder Mitbewerbern im Original oder als Kopie ausgehändigt werden. Eigentums- und Urheberrecht vorbehalten.

	date	name
User		Inzschwn
Proved	20.06.2016	Inzkraum
Reading station		

Rotating beacon

Mat.-Nr. 1000364531 Doc.-Nr. 2060093317

Revision	03
Ersetzt Version	02
Gewicht in [kg]	

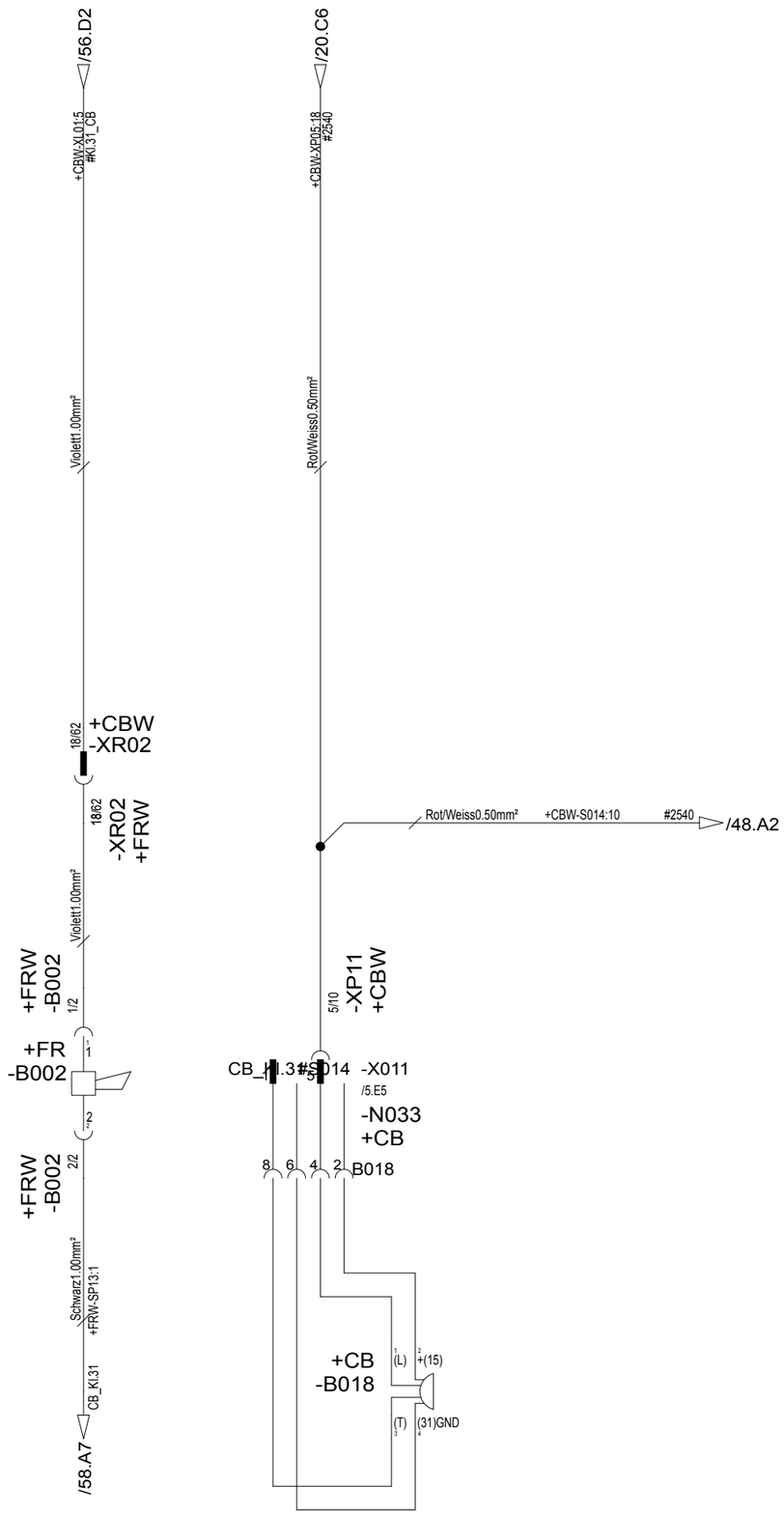

KRAMER
Kramer Werke GmbH
Wacker Neuson Straße 1 / D- 88630 Pfullendorf
Tel.: +49 (0) 7552 9288 -0
Fax: +49 (0) 7552 9288 -49

Diese Zeichnung darf ohne unsere ausdrückliche Genehmigung weder vervielfältigt, noch dritten Personen oder Mitbewerbern im Original oder als Kopie ausgehändigt werden. Eigentums- und Urheberrecht vorbehalten.

	date	name
User		Inzschwn
Proved	20.06.2016	Inzkraum
Reading station		

Horn and Light warning buzzer

Mat. -Nr. 1000364531

Doc. -Nr. 2060093317

Revision	03
Ersetzt Version	02
Gewicht in [kg]	

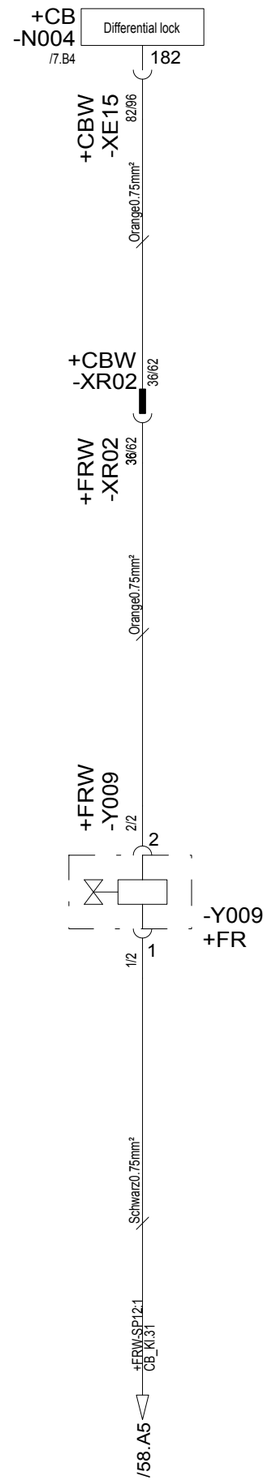

KRAMER
Kramer Werke GmbH
Wacker Neuson Straße 1 / D- 88630 Pfullendorf
Tel.: +49 (0) 7552 9288 -0
Fax: +49 (0) 7552 9288 -49

Diese Zeichnung darf ohne unsere ausdrückliche Genehmigung weder vervielfältigt, noch dritten Personen oder Mitbewerbern im Original oder als Kopie ausgehändigt werden. Eigentums- und Urheberrecht vorbehalten.

	date	name
User		Inzschwn
Proved	20.06.2016	Inzkraum
Reading station		

Differential lock

Mat. -Nr. 1000364531

Doc. -Nr. 2060093317

Revision	03
Ersetzt Version	02
Gewicht in [kg]	

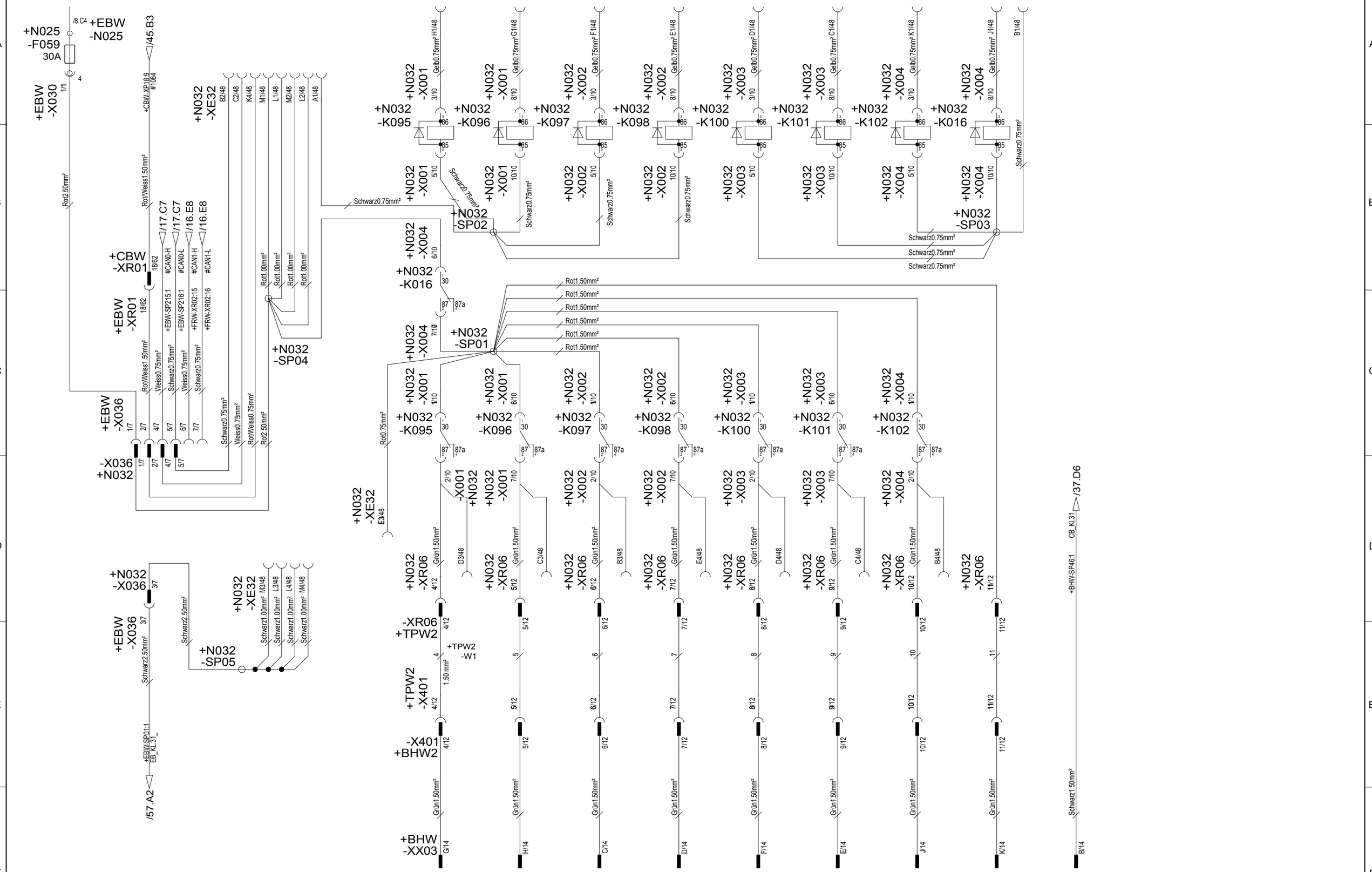

KRAMER
Kramer Werke GmbH
Wacker Neuson Straße 1 / D- 88630 Pfullendorf
Tel.: +49 (0) 7552 9288 -0
Fax: +49 (0) 7552 9288 -49

Diese Zeichnung darf ohne unsere ausdrückliche Genehmigung weder vervielfältigt, noch dritten Personen oder Mitbewerbern im Original oder als Kopie ausgehändigt werden. Eigentums- und Urheberrecht vorbehalten.

	date	name
User		Inzschwn
Proved	20.06.2016	Inzkraum
Reading station		

Front power outlet 14-Pin

Mat.-Nr. 1000364531 Doc.-Nr. 2060093317

Revision	03
Ersetzt Version	02
Gewicht in [kg]	

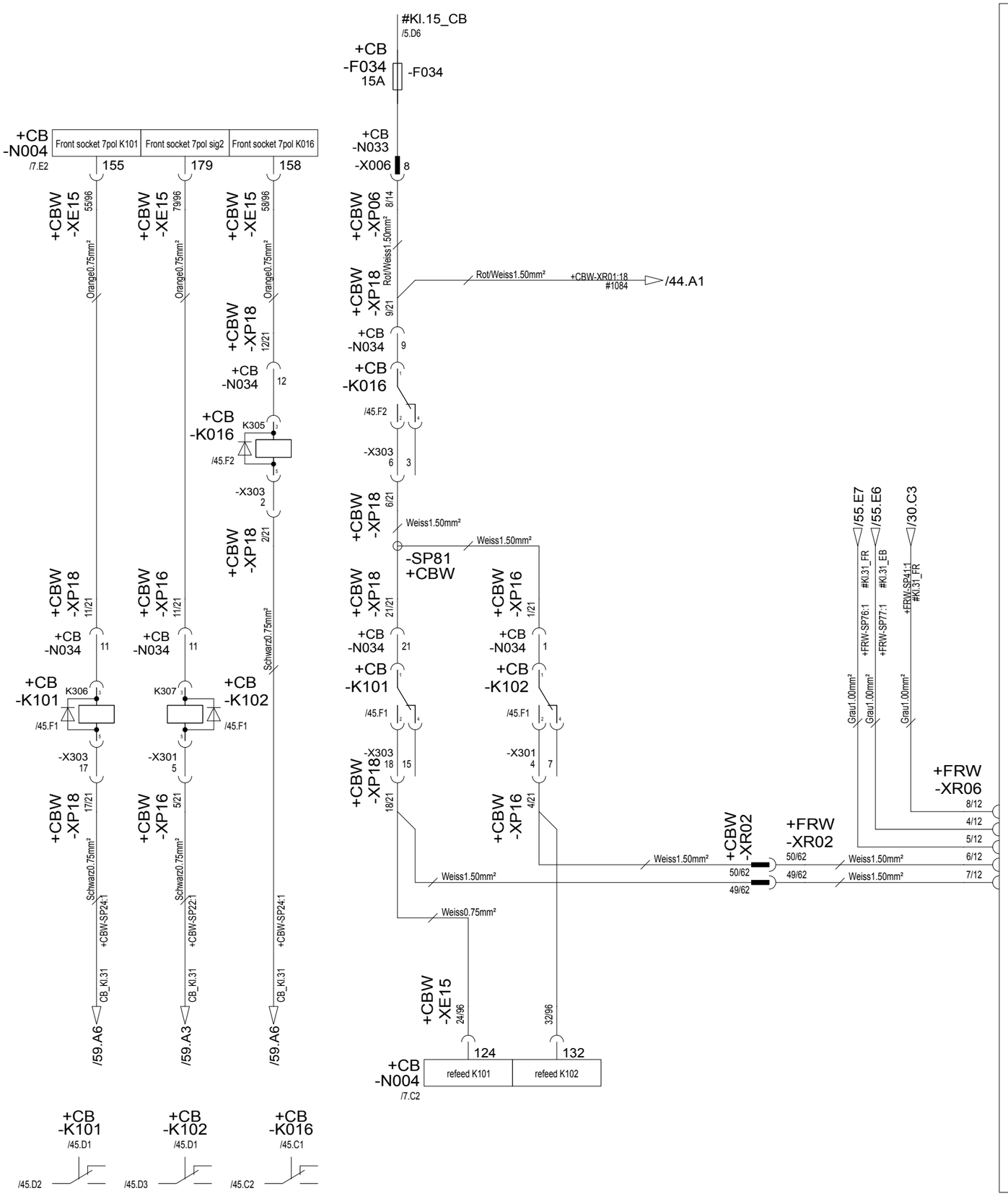

KRAMER
Kramer Werke GmbH
Wacker Neuson Straße 1 / D- 88630 Pfullendorf
Tel.: +49 (0) 7552 9288 -0
Fax: +49 (0) 7552 9288 -49

Diese Zeichnung darf ohne unsere ausdrückliche Genehmigung weder vervielfältigt, noch dritten Personen oder Mitbewerbern im Original oder als Kopie ausgehändigt werden. Eigentums- und Urheberrecht vorbehalten.

	date	name
User		Inzschwn
Proved	20.06.2016	Inzkraum
Reading station		

Front power outlet 7-Pin

Mat.-Nr. 1000364531
Doc.-Nr. 2060093317

Revision	03
Ersetzt Version	02
Gewicht in [kg]	

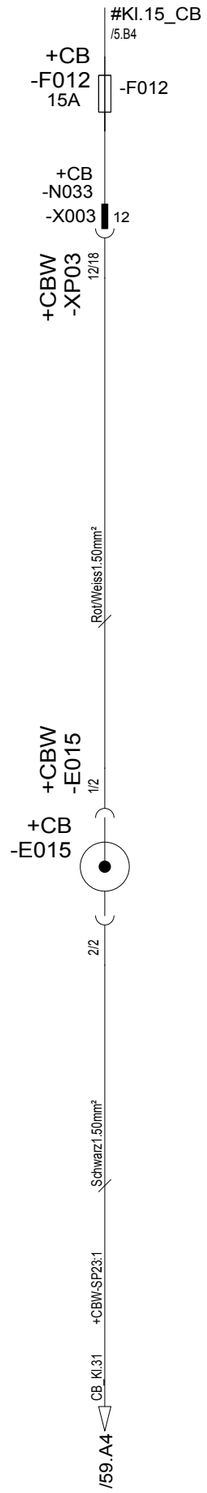

KRAMER
Kramer Werke GmbH
Wacker Neuson Straße 1 / D- 88630 Pfullendorf
Tel.: +49 (0) 7552 9288 -0
Fax: +49 (0) 7552 9288 -49

Diese Zeichnung darf ohne unsere ausdrückliche Genehmigung weder vervielfältigt, noch dritten Personen oder Mitbewerbern im Original oder als Kopie ausgehändigt werden. Eigentums- und Urheberrecht vorbehalten.

	date	name
User		Inzschwn
Proved	20.06.2016	Inzkraum
Reading station		

Power outlet 12 V power outlet

Mat. -Nr. 1000364531

Doc. -Nr. 2060093317

Revision	03
Ersetzt Version	02
Gewicht in [kg]	

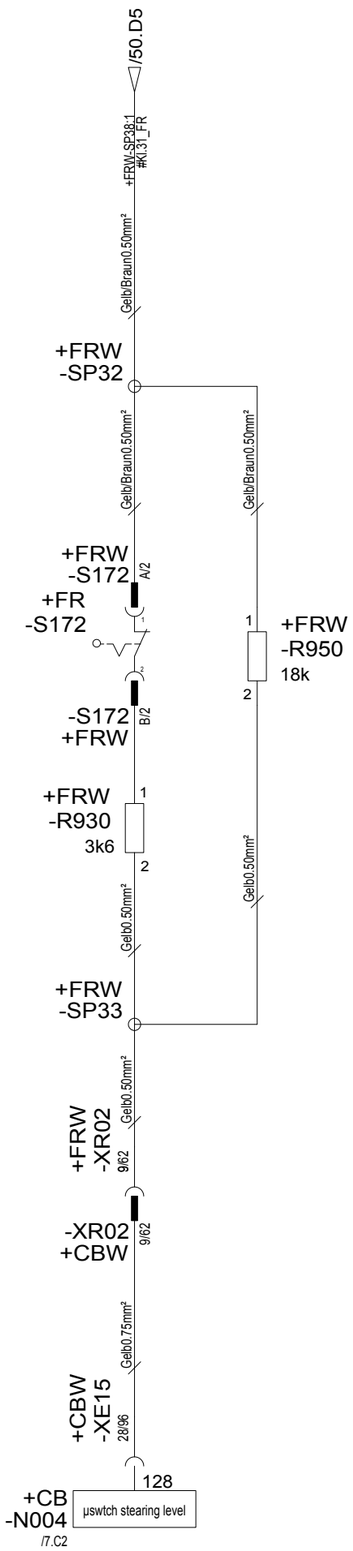

KRAMER
Kramer Werke GmbH
Wacker Neuson Straße 1 / D- 88630 Pfullendorf
Tel.: +49 (0) 7552 9288 -0
Fax: +49 (0) 7552 9288 -49

Diese Zeichnung darf ohne unsere ausdrückliche Genehmigung weder vervielfältigt, noch dritten Personen oder Mitbewerbern im Original oder als Kopie ausgehändigt werden. Eigentums- und Urheberrecht vorbehalten.

	date	name
User		Inzschwn
Proved	20.06.2016	Inzkraum
Reading station		

Steering mode switch

Mat. -Nr. 1000364531

Doc. -Nr. 2060093317

Revision	03
Ersetzt Version	02
Gewicht in [kg]	

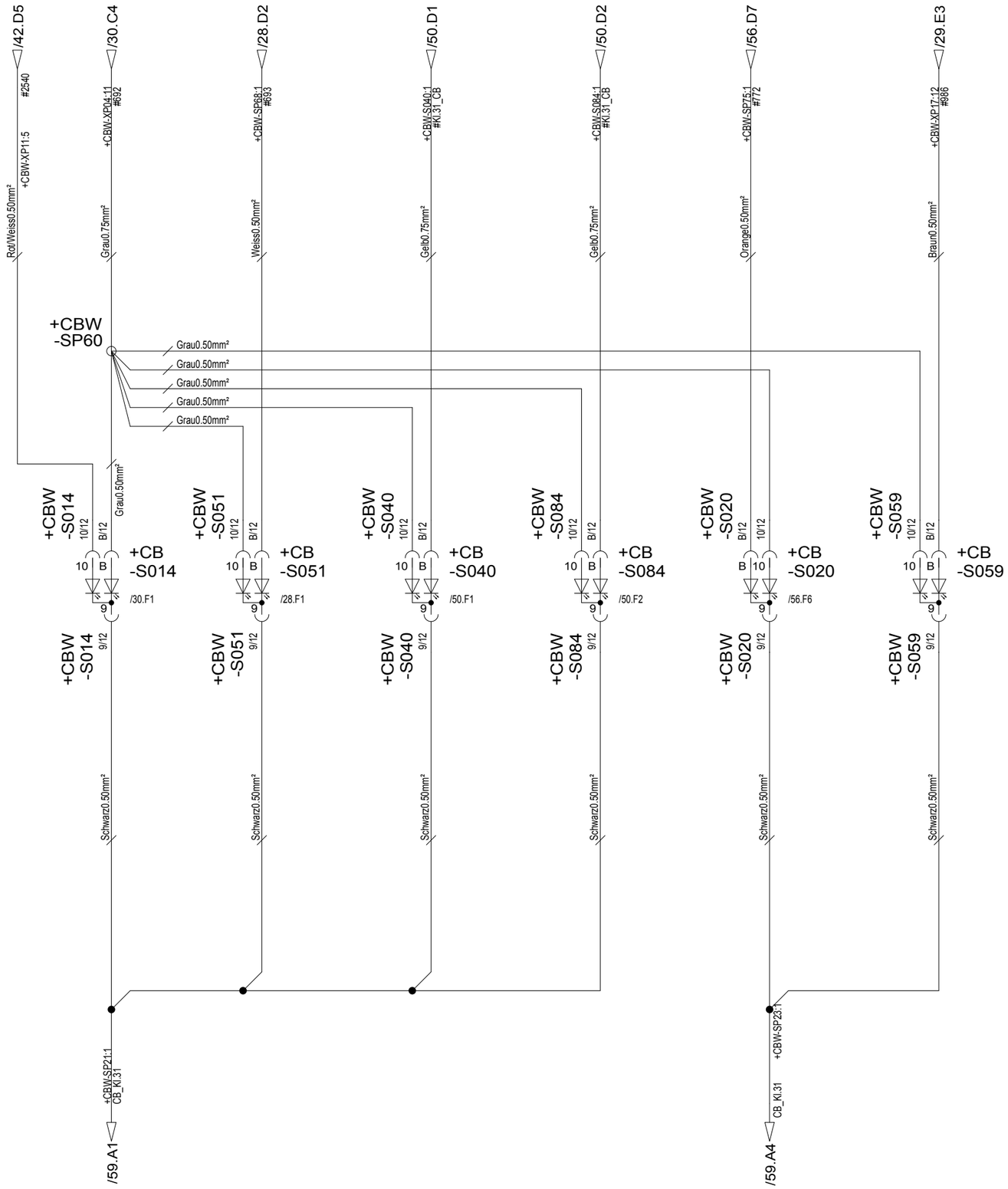

KRAMER
Kramer Werke GmbH
Wacker Neuson Straße 1 / D- 88630 Pfullendorf
Tel.: +49 (0) 7552 9288 -0
Fax: +49 (0) 7552 9288 -49

Diese Zeichnung darf ohne unsere ausdrückliche Genehmigung weder vervielfältigt, noch dritten Personen oder Mitbewerbern im Original oder als Kopie ausgehändigt werden. Eigentums- und Urheberrecht vorbehalten.

	date	name
User		Inzschwn
Proved	20.06.2016	Inzkraum
Reading station		

switch illumination

Mat. -Nr. 1000364531

Doc. -Nr. 2060093317

Revision	03
Ersetzt Version	02
Gewicht in [kg]	

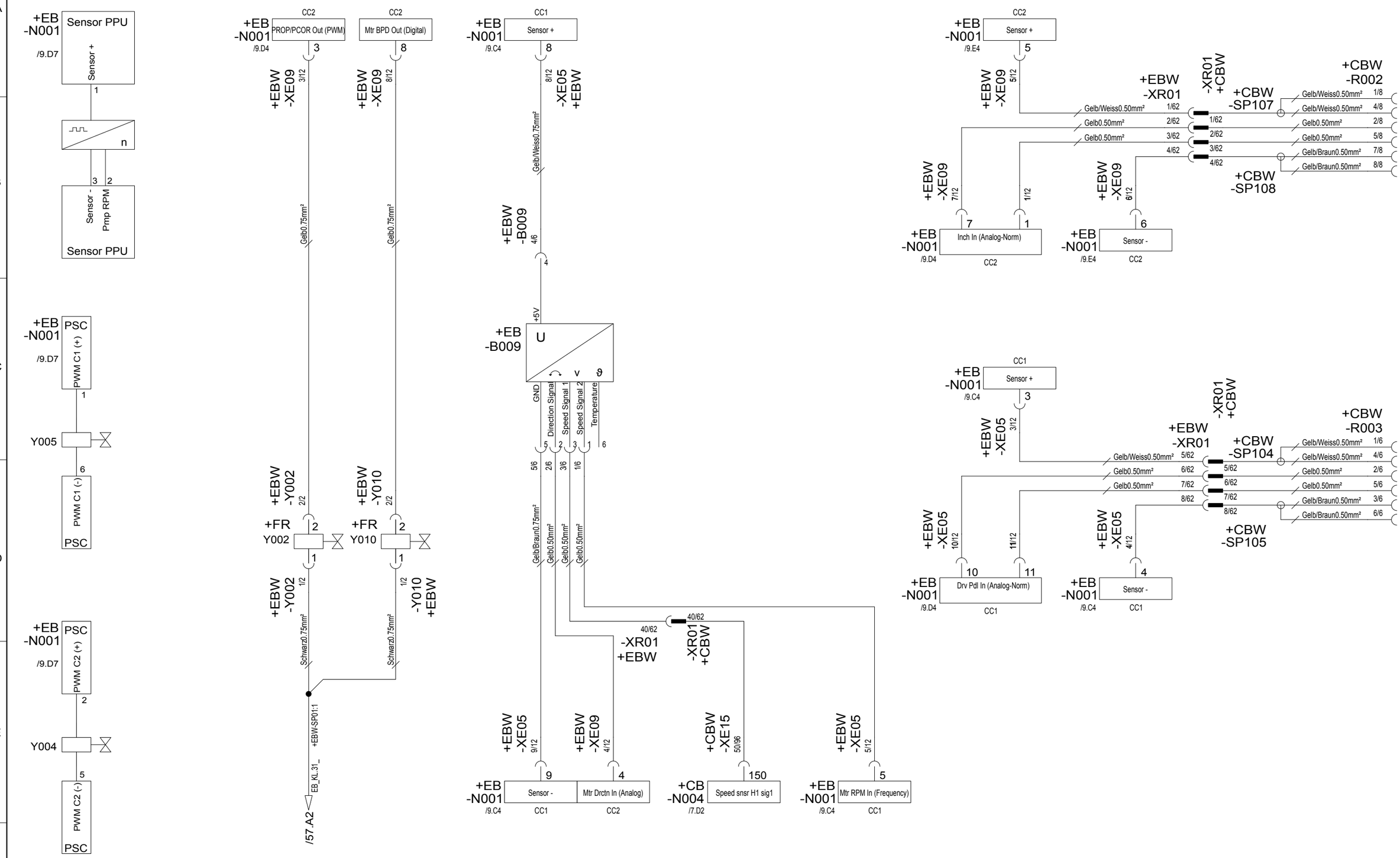

KRAMER
Kramer Werke GmbH
Wacker Neuson Straße 1 / D- 88630 Pfullendorf
Tel.: +49 (0) 7552 9288 -0
Fax: +49 (0) 7552 9288 -49

Diese Zeichnung darf ohne unsere ausdrückliche Genehmigung weder vervielfältigt, noch dritten Personen oder Mitbewerbern im Original oder als Kopie ausgehändigt werden. Eigentums- und Urheberrecht vorbehalten.

	date	name
User		Inzschwn
Proved	20.06.2016	Inzkraum
Reading station		

Travelling drive

Mat.-Nr. 1000364531 Doc.-Nr. 2060093317

Revision	03
Ersetzt Version	02
Gewicht in [kg]	

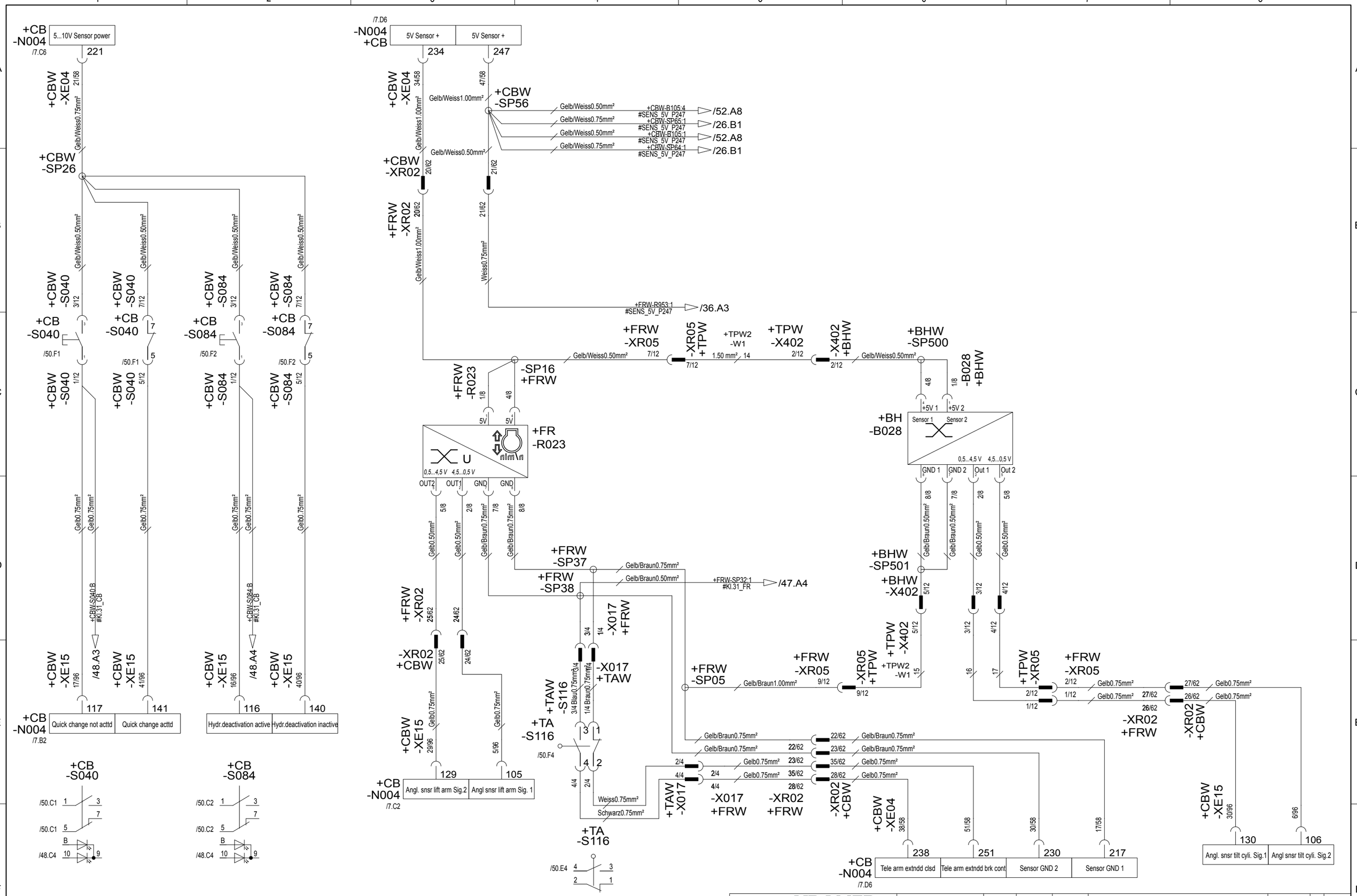

KRAMER
Kramer Werke GmbH
Wacker Neuson Straße 1 / D- 88630 Pfullendorf
Tel.: +49 (0) 7552 9288 -0
Fax: +49 (0) 7552 9288 -49

Diese Zeichnung darf ohne unsere ausdrückliche Genehmigung weder vervielfältigt, noch dritten Personen oder Mitbewerbern im Original oder als Kopie ausgehändigt werden. Eigentums- und Urheberrecht vorbehalten.

	date	name
User		Inzschwn
Proved	20.06.2016	Inzkraum
Reading station		

Sensor Telescopic boom

Mat.-Nr. 1000364531 Doc.-Nr. 2060093317

Revision	03
Ersetzt Version	02
Gewicht in [kg]	

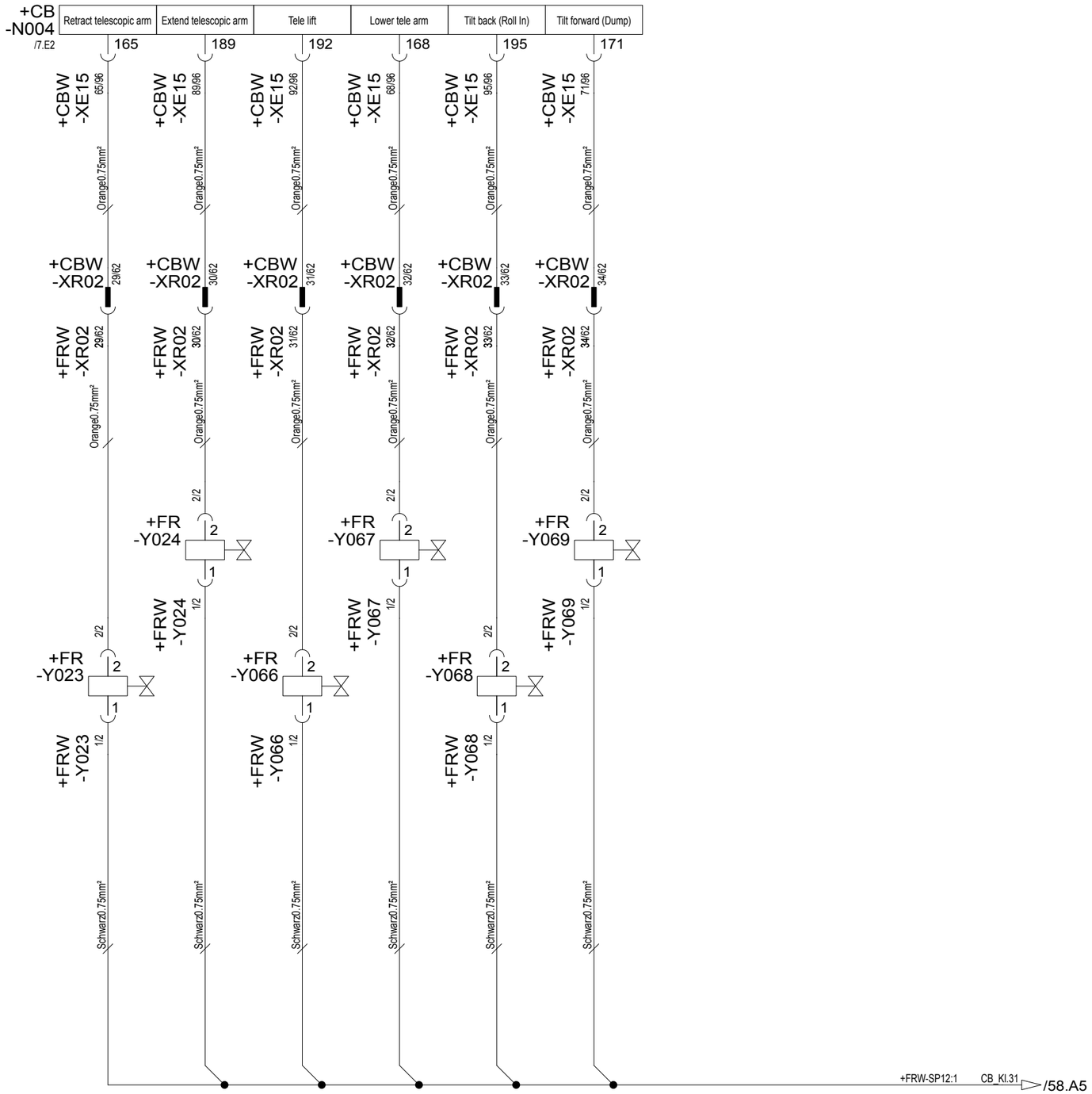

KRAMER
Kramer Werke GmbH
Wacker Neuson Straße 1 / D- 88630 Pfullendorf
Tel.: +49 (0) 7552 9288 -0
Fax: +49 (0) 7552 9288 -49

Diese Zeichnung darf ohne unsere ausdrückliche Genehmigung weder vervielfältigt, noch dritten Personen oder Mitbewerbern im Original oder als Kopie ausgehändigt werden. Eigentums- und Urheberrecht vorbehalten.

	date	name
User		Inzschwn
Proved	20.06.2016	Inzkraum
Reading station		

valve Telescopic boom

Mat. -Nr. 1000364531

Doc. -Nr. 2060093317

Revision	03
Ersetzt Version	02
Gewicht in [kg]	

A3

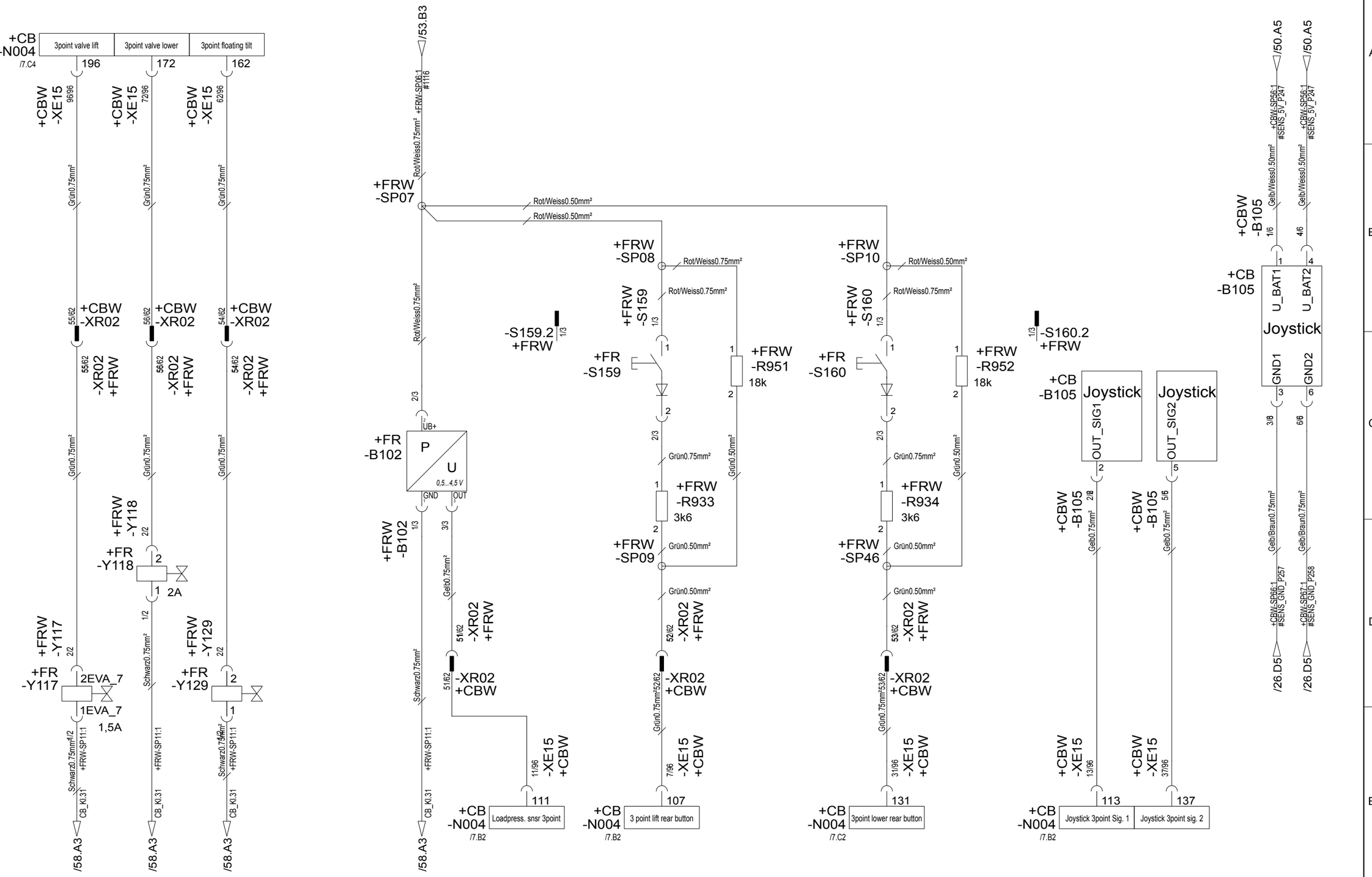

KRAMER
Kramer Werke GmbH
Wacker Neuson Straße 1 / D- 88630 Pfullendorf
Tel.: +49 (0) 7552 9288 -0
Fax: +49 (0) 7552 9288 -49

Diese Zeichnung darf ohne unsere ausdrückliche Genehmigung weder vervielfältigt, noch dritten Personen oder Mitbewerbern im Original oder als Kopie ausgehändigt werden. Eigentums- und Urheberrecht vorbehalten.

	date	name
User		Inzschwn
Proved	20.06.2016	Inzkraum
Reading station		

Rear three-point power lift

Mat.-Nr. 1000364531 Doc.-Nr. 2060093317

Revision	03
Ersetzt Version	02
Gewicht in [kg]	

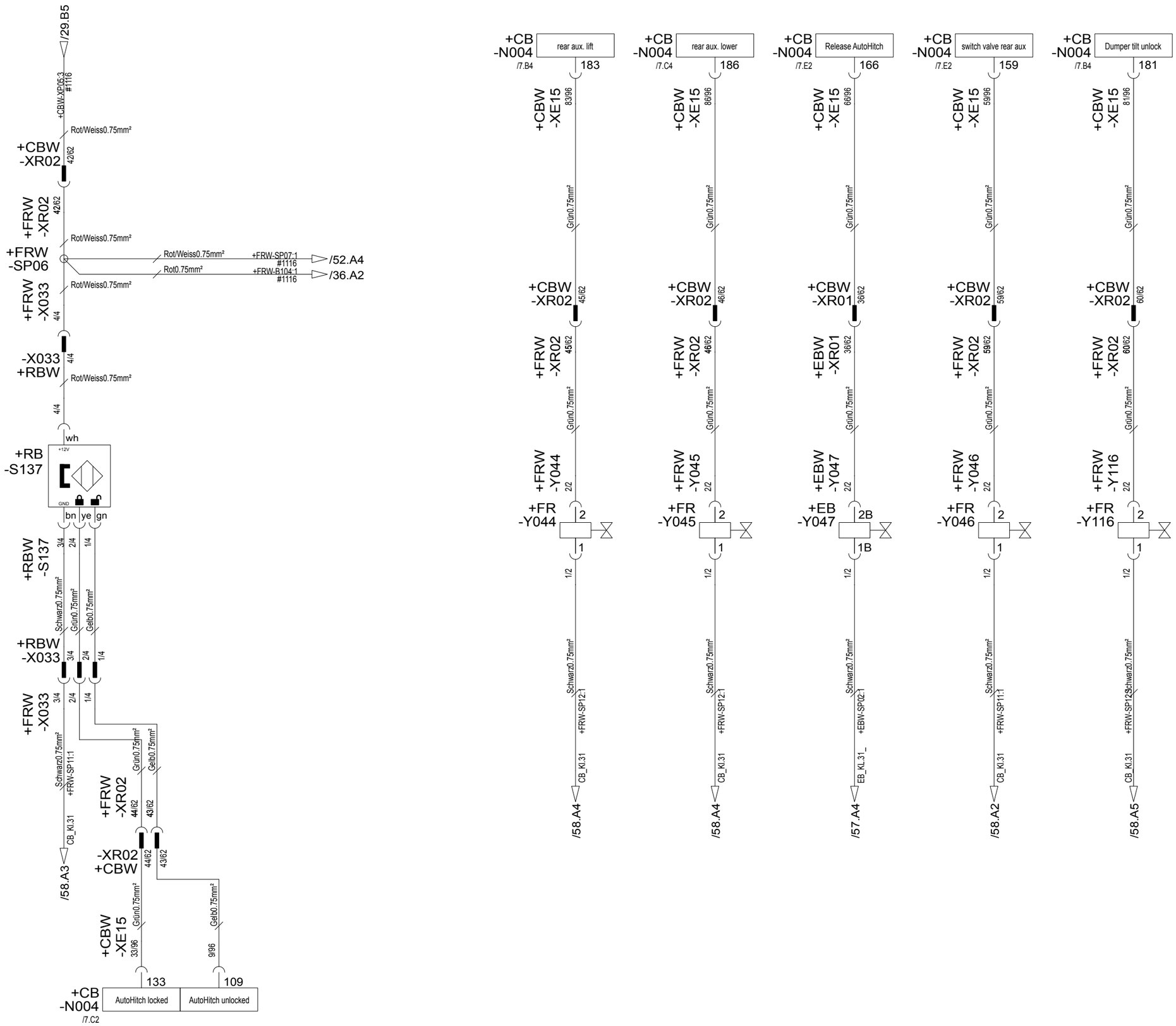

KRAMER
Kramer Werke GmbH
Wacker Neuson Straße 1 / D- 88630 Pfullendorf
Tel.: +49 (0) 7552 9288 -0
Fax: +49 (0) 7552 9288 -49

Diese Zeichnung darf ohne unsere ausdrückliche Genehmigung weder vervielfältigt, noch dritten Personen oder Mitbewerbern im Original oder als Kopie ausgehändigt werden. Eigentums- und Urheberrecht vorbehalten.

	date	name
User		Inzschwn
Proved	20.06.2016	Inzkraum
Reading station		

Autohitch trailer coupling

Mat.-Nr. 1000364531

Doc.-Nr. 2060093317

Revision	03
Ersetzt Version	02
Gewicht in [kg]	

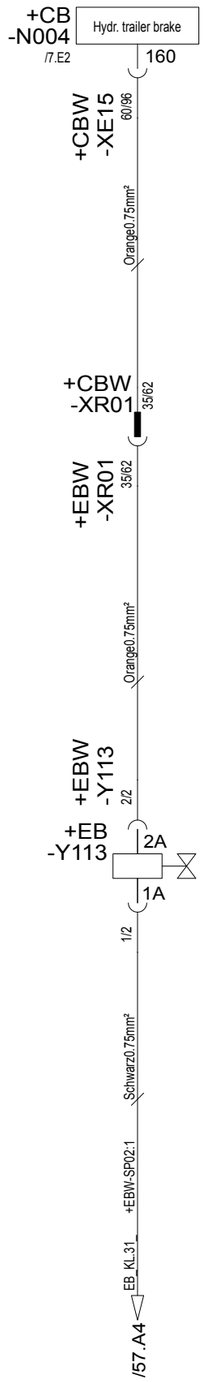

KRAMER
Kramer Werke GmbH
Wacker Neuson Straße 1 / D- 88630 Pfullendorf
Tel.: +49 (0) 7552 9288 -0
Fax: +49 (0) 7552 9288 -49

Diese Zeichnung darf ohne unsere ausdrückliche Genehmigung weder vervielfältigt, noch dritten Personen oder Mitbewerbern im Original oder als Kopie ausgehändigt werden. Eigentums- und Urheberrecht vorbehalten.

	date	name
User		Inzschwn
Proved	20.06.2016	Inzkraum
Reading station		

Trailer brake

Mat.-Nr. 1000364531

Doc.-Nr. 2060093317

Revision	03
Ersetzt Version	02
Gewicht in [kg]	

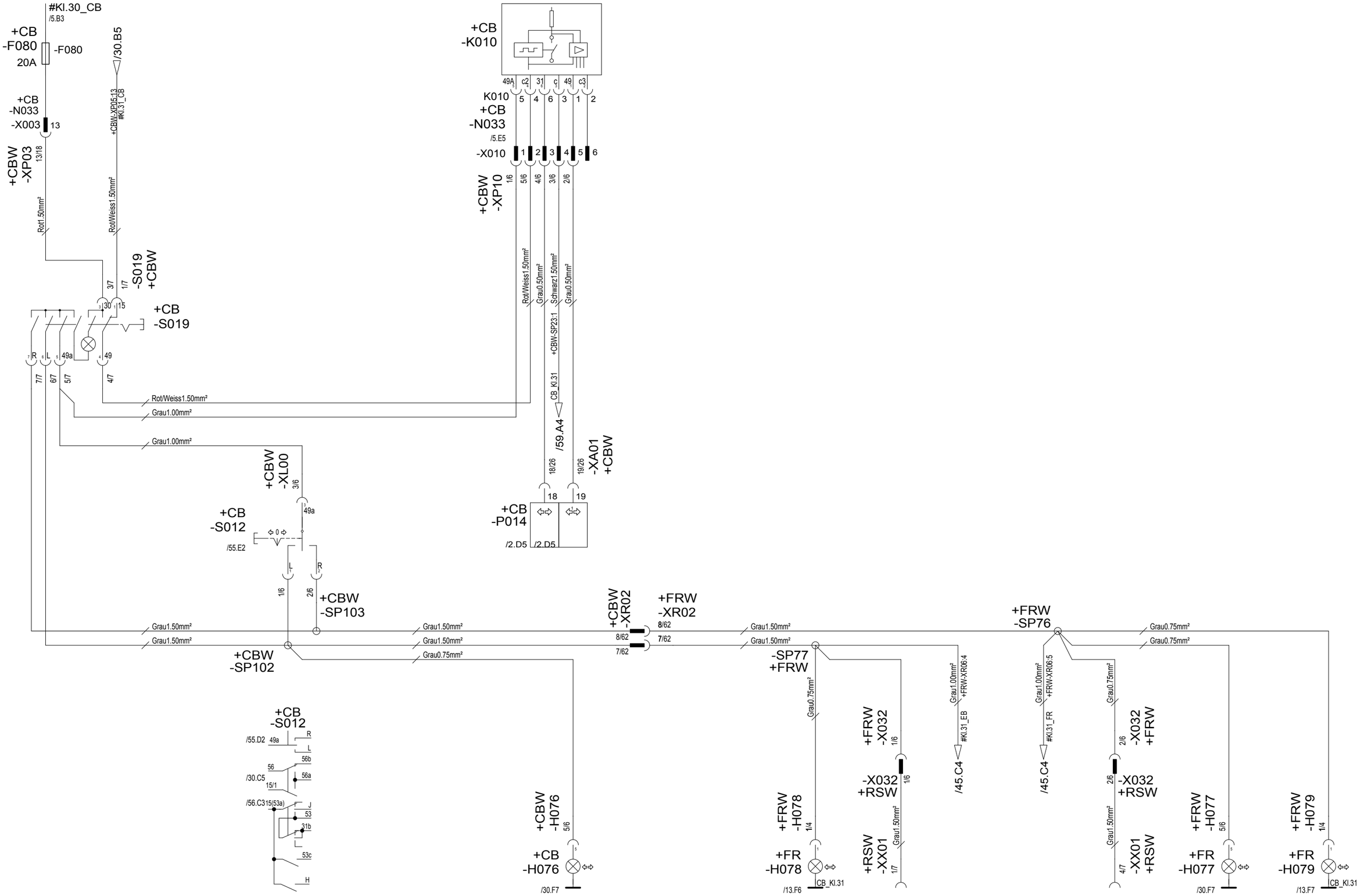

KRAMER
Kramer Werke GmbH
Wacker Neuson Straße 1 / D- 88630 Pfullendorf
Tel.: +49 (0) 7552 9288 -0
Fax: +49 (0) 7552 9288 -49

Diese Zeichnung darf ohne unsere ausdrückliche Genehmigung weder vervielfältigt, noch dritten Personen oder Mitbewerbern im Original oder als Kopie ausgehändigt werden. Eigentums- und Urheberrecht vorbehalten.

	date	name
User		Inzschwn
Proved	20.06.2016	Inzkraum
Reading station		

Turn indicator system

Mat.-Nr. 1000364531

Doc.-Nr. 2060093317

Revision	03
Ersetzt Version	02
Gewicht in [kg]	

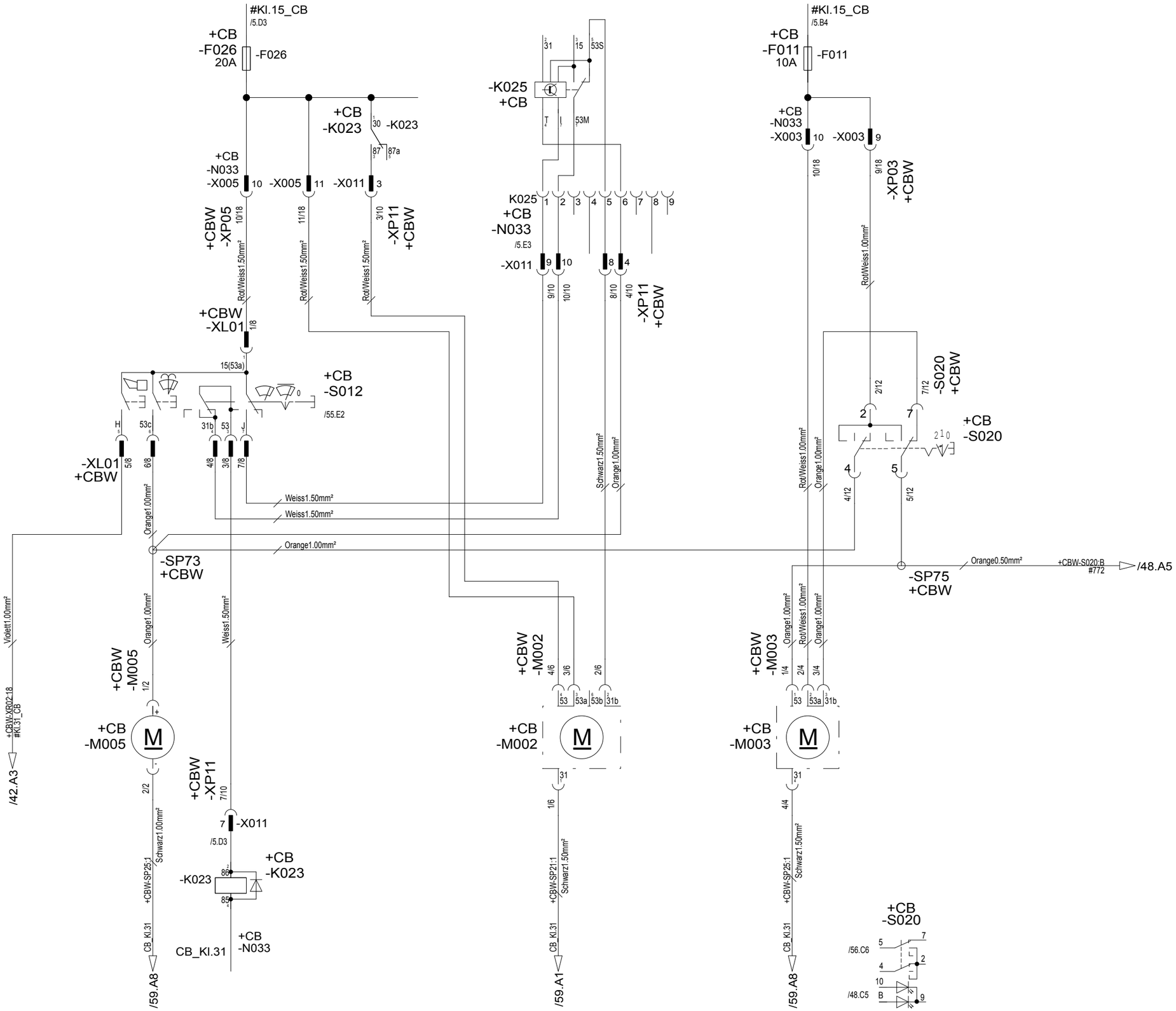

KRAMER
Kramer Werke GmbH
Wacker Neuson Straße 1 / D- 88630 Pfullendorf
Tel.: +49 (0) 7552 9288 -0
Fax: +49 (0) 7552 9288 -49

Diese Zeichnung darf ohne unsere ausdrückliche Genehmigung weder vervielfältigt, noch dritten Personen oder Mitbewerbern im Original oder als Kopie ausgehändigt werden. Eigentums- und Urheberrecht vorbehalten.

	date	name
User		Inzschwn
Proved	20.06.2016	Inzkraum
Reading station		

Wiper system

Mat.-Nr. 1000364531

Doc.-Nr. 2060093317

Revision	03
Ersetzt Version	02
Gewicht in [kg]	

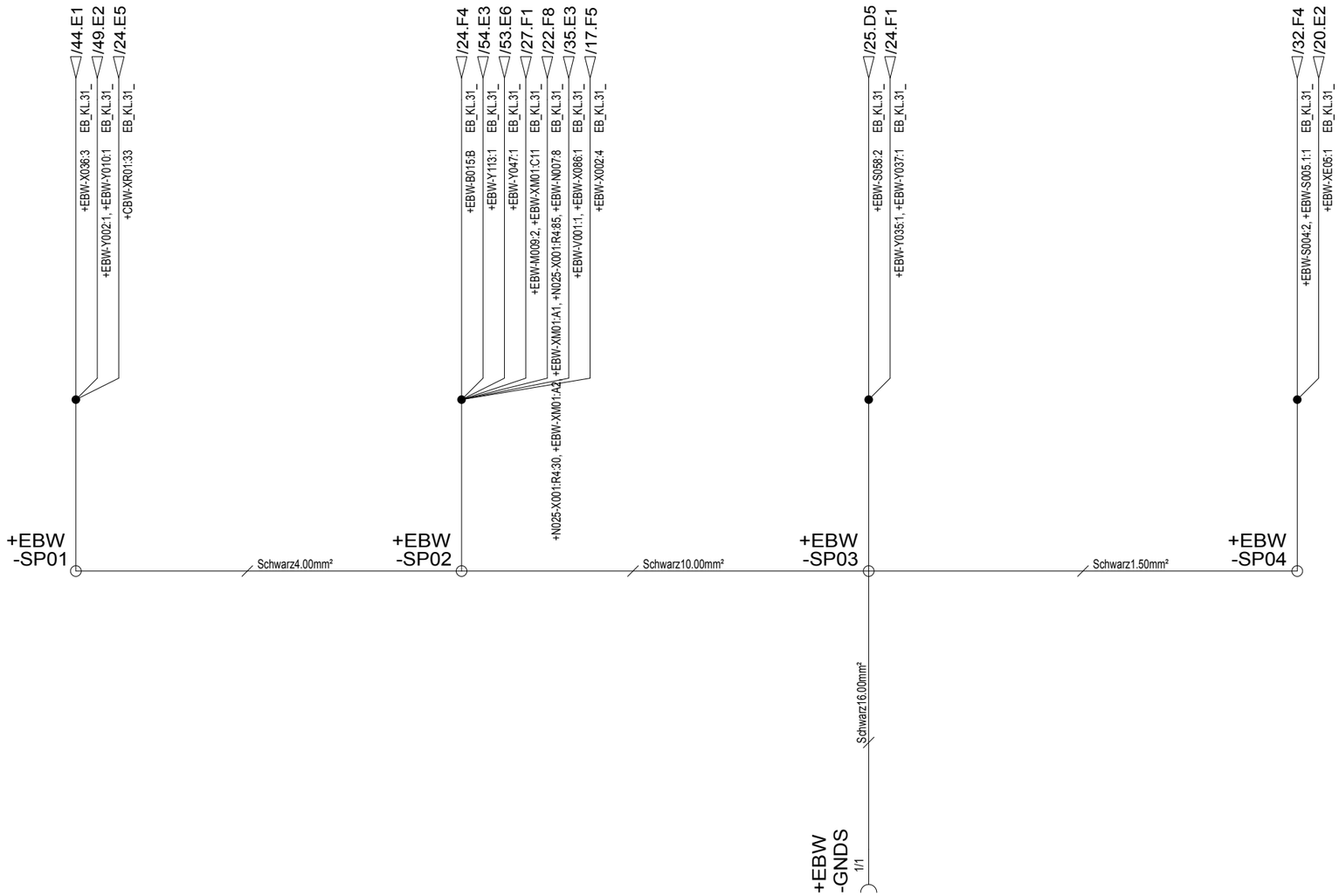

KRAMER
Kramer Werke GmbH
Wacker Neuson Straße 1 / D- 88630 Pfullendorf
Tel.: +49 (0) 7552 9288 -0
Fax: +49 (0) 7552 9288 -49

Diese Zeichnung darf ohne unsere ausdrückliche Genehmigung weder vervielfältigt, noch dritten Personen oder Mitbewerbern im Original oder als Kopie ausgehändigt werden. Eigentums- und Urheberrecht vorbehalten.

	date	name
User		Inzkraum
Proved	20.06.2016	Inzkraum
Reading station		

Earth Splice EBW

Revision	03
Ersetzt Version	02
Gewicht in [kg]	

Mat. -Nr. 1000364531 Doc. -Nr. 2060093317

A3

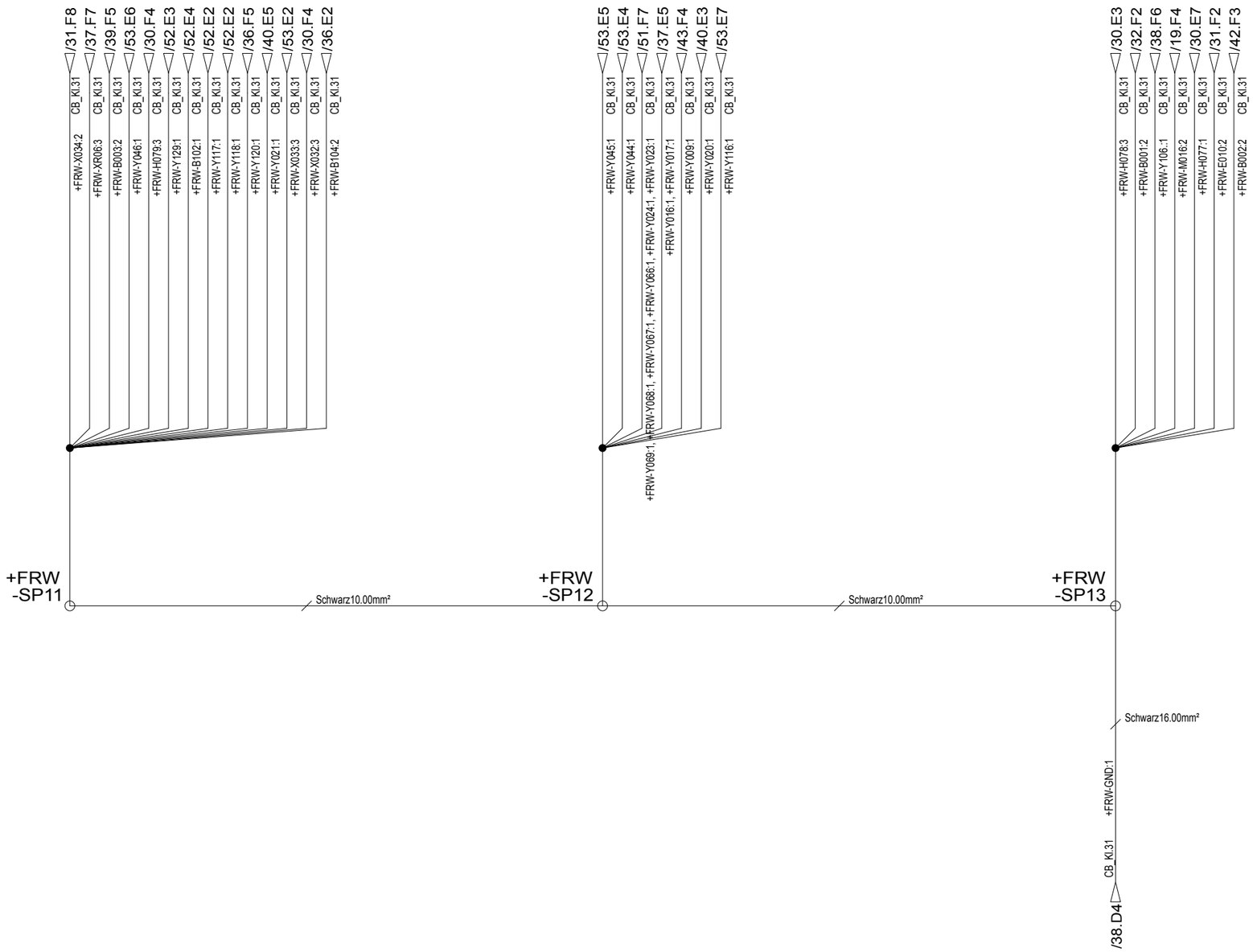

KRAMER
Kramer Werke GmbH
Wacker Neuson Straße 1 / D- 88630 Pfullendorf
Tel.: +49 (0) 7552 9288 -0
Fax: +49 (0) 7552 9288 -49

Diese Zeichnung darf ohne unsere ausdrückliche Genehmigung weder vervielfältigt, noch dritten Personen oder Mitbewerbern im Original oder als Kopie ausgehändigt werden. Eigentums- und Urheberrecht vorbehalten.

	date	name
User		Inzkraum
Proved	20.06.2016	Inzkraum
Reading station		

Earth Splice FRW

Mat. -Nr. 1000364531

Doc. -Nr. 2060093317

Revision	03
Ersetzt Version	02
Gewicht in [kg]	

A3

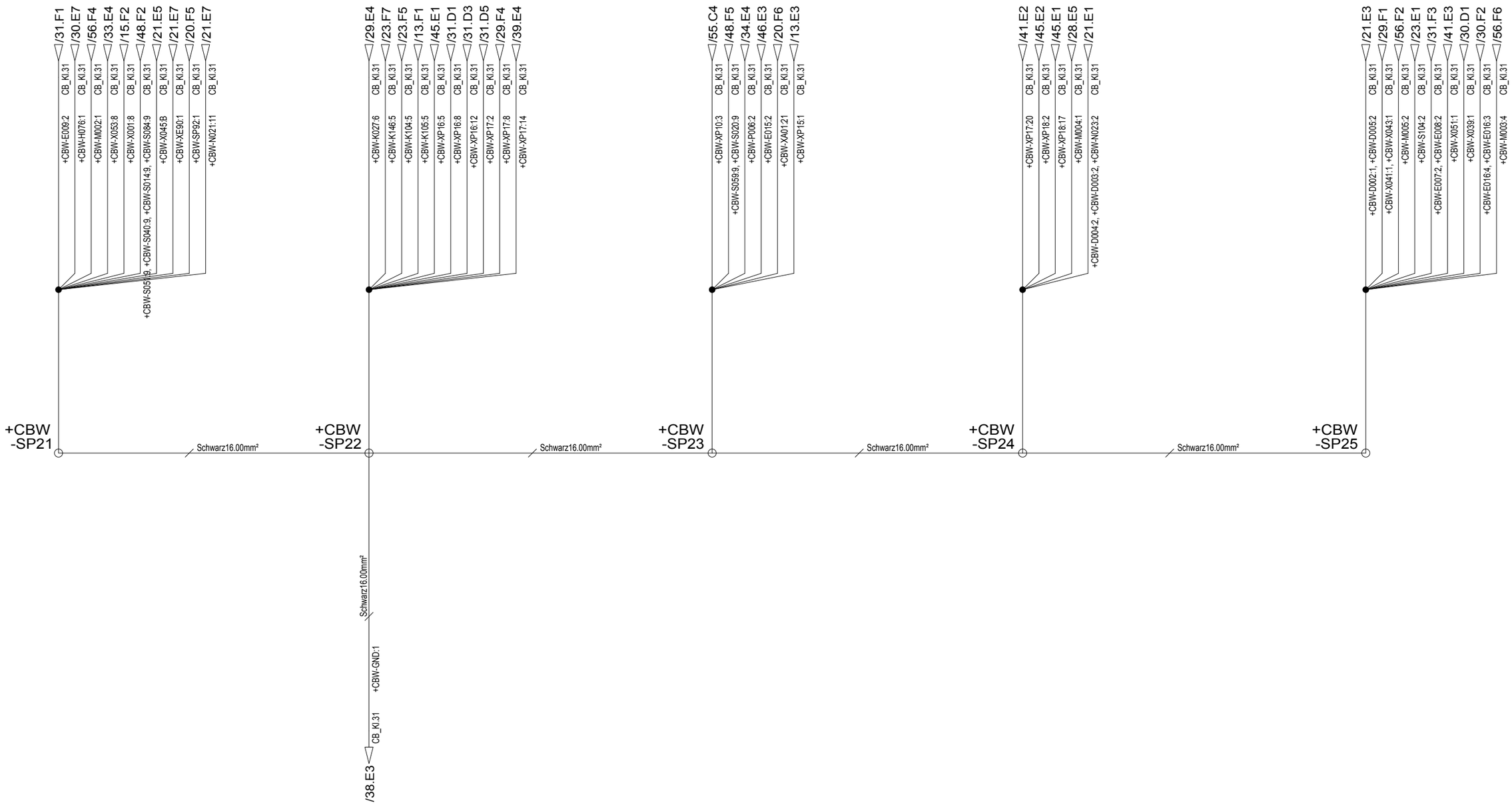

KRAMER
Kramer Werke GmbH
Wacker Neuson Straße 1 / D- 88630 Pfullendorf
Tel.: +49 (0) 7552 9288 -0
Fax: +49 (0) 7552 9288 -49

Diese Zeichnung darf ohne unsere ausdrückliche Genehmigung weder vervielfältigt, noch dritten Personen oder Mitbewerbern im Original oder als Kopie ausgehändigt werden. Eigentums- und Urheberrecht vorbehalten.

	date	name
User		lnzkraum
Proved	20.06.2016	lnzkraum
Reading station		

Earth Splice CBW

Mat. -Nr. 1000364531

Doc. -Nr. 2060093317

Revision	03
Ersetzt Version	02
Gewicht in [kg]	

A3

BMK	Ort	Position	Identifier_Text	SAP_ArticleNumber
-A001	+CB	/33.C3	Radio	1000263879
B018	+CB	/5.D2	Main board (fuses & relays)	1000335043
-B001	+FR	/32.D2	Fuel gauge	1000243559
-B001	+FRW	/32.D2	Plug connector Fuel gauge	1000027438
-B002	+FR	/42.D3	Horn	1000269368
-B002	+FRW	/42.D3	Plug connector Horn	1000027438
-B003	+FR	/39.E5	Reversing warning system	1000027045
-B003	+FRW	/39.D5	Plug connector Reversing warning system	1000000464
-B008	+FR	/34.C1	Load sensor – strain gage	1000317698
-B008	+FRW	/34.D1	Plug connector Load sensor – strain gage	1000027429
-B009	+EB	/49.B3	Engine speed sensor Hydraulic motor	1000305506
-B009	+EBW	/49.D4	Plug connector Engine speed sensor Hydraulic motor	1000183226
-B011	+CB	/33.E2	speaker	1000029659
-B012	+CB	/33.E3	speaker	1000029659
-B015	+EBW	/24.D3	Plug connector Coolant level sensor	1000027429
-B015	+EN	/24.D3	Coolant level sensor	1000189283
-B016	+EBW	/24.C6	Plug connector Temperature sensor Hydraulic oil	1000027332
-B016	+EN	/24.D6	Temperature sensor Hydraulic oil Radiator fan	1000336644
-B018	+CB	/42.E4	Buzzer	1000322070
-B028	+BH	/50.D6	Angle transmitter Tilt cylinder	1000300036
-B028	+BHW	/50.C6	Plug connector Angle transmitter Tilt cylinder	1000262118
-B086	+FR	/14.B4	Rear camera	1000315902
-B087	+FR	/14.B5	Front camera	1000310478
-B102	+FR	/52.C4	Rear three-point linkage load pressure sensor	1000282161
-B102	+FRW	/52.D4	Plug connector Rear three-point linkage load pressure sensor	1000277498
-B104	+FR	/36.C2	Engine speed sensor PTO shaft CAN	1000335339
-B104	+FRW	/36.C2	Plug connector Engine speed sensor PTO shaft	1000337881
-B104.1	+FRW	/36.C2	Pin housing Engine speed sensor PTO shaft	1000085023
-B105	+CB	/52.C8	Potentiometer Three-point Rear linkage	1000335340
-B105	+CBW	/52.B8	Plug connector Potentiometer Rear linkage	1000238088
-D002	+CB0	/21.D4	Joystick with Control electronics	1000349290

KRAMER
Kramer Werke GmbH
Wacker Neuson Straße 1 / D- 88630 Pfullendorf
Tel.: +49 (0) 7552 9288 -0
Fax: +49 (0) 7552 9288 -49

Diese Zeichnung darf ohne unsere ausdrückliche Genehmigung weder vervielfältigt, noch dritten Personen oder Mitbewerbern im Original oder als Kopie ausgehändigt werden. Eigentums- und Urheberrecht vorbehalten.

	date	name
User		Inzkraum
Proved		
Reading station		

Betriebsmittelverzeichnis
-

Mat. -Nr. 1000364531 Doc. -Nr. 2060093317

Revision
Ersetzt Version
Gewicht in [kg]

BMK_01/105

A3

BMK	Ort	Position	Identifier_Text	SAP_ArticleNumber
-D002	+CBW	/21.D4	Plug connector Joystick	1000027431
-D003	+CB0	/21.D1	CAN Keypad 1	1000335104
-D003	+CBW	/21.C1	Plug connector CAN Keypad 1	1000104286
-D004	+CB2	/21.D2	CAN Keypad 2	1000335107
-D004	+CBW	/21.C2	Plug connector CAN Keypad 2	1000104286
-D005	+CB0	/21.D3	CAN Keypad 3.3	1000335110
-D005	+CB1	/21.D3	CAN Keypad 3.2	1000335109
-D005	+CB2	/21.D3	CAN Keypad 3.1	1000335108
-D005	+CBW	/21.C3	Plug connector CAN Keypad 3	1000104286
-D+	+EBW	/21.A7	Dynamo positive	1000050024
-E007	+CB0	/31.D3	Rear working light left	1000270919
-E007	+CBW	/31.D3	Plug connector Rear working light left	1000270365
-E008	+CB0	/31.D4	Rear working light right	1000270919
-E008	+CBW	/31.D4	Plug connector Rear working light right	1000270365
-E009	+CB0	/31.D1	Front working light left	1000270919
-E009	+CBW	/31.D1	Plug connector Front working light left	1000270365
-E010	+FR0	/31.D2	Front working light right	1000270919
-E010	+FRW	/31.D2	Plug connector Front working light right	1000270365
-E012	+TA0	/31.D7	Working head lamps Telescopic boom	1000270919
-E012	+TAW	/31.D7	Plug connector Working head lamps Telescopic boom	1000270365
-E013	+TA0	/31.D7	Working head lamps Telescopic boom	1000270919
-E013	+TAW	/31.D7	Plug connector Working head lamps Telescopic boom	1000270365
-E014	+CB	/30.C1	Interior light	1000051952
-E015	+CB	/46.D3	12 V power outlet	1000187512
-E015	+CBW	/46.C3	Plug connector 12 V power outlet	1000095323
-E016	+CB	/30.C2	License plate	1000283787
-E016	+CBW	/30.C2	Plug connector License plate	1000104286
-E016.1	+CB	/30.C2	License plate	1000283787
-F001	+N025	/35.A5	fuse 100A	1000191490
-F002	+N025	/35.A6	fuse 100A	1000191490
-F004	+N025	/27.B1	fuse 15A fuel pump	1000186028

KRAMER
Kramer Werke GmbH
Wacker Neuson Straße 1 / D- 88630 Pfullendorf
Tel.: +49 (0) 7552 9288 -0
Fax: +49 (0) 7552 9288 -49

Diese Zeichnung darf ohne unsere ausdrückliche Genehmigung weder vervielfältigt, noch dritten Personen oder Mitbewerbern im Original oder als Kopie ausgehändigt werden. Eigentums- und Urheberrecht vorbehalten.

	date	name
User		Inzkraum
Proved		
Reading station		

Betriebsmittelverzeichnis
-

Mat. -Nr. 1000364531 Doc. -Nr. 2060093317

Revision
Ersetzt Version
Gewicht in [kg]

A3

BMK	Ort	Position	Identifier_Text	SAP_ArticleNumber
-F005	+N025	/27.B3	fuse 20A motor control	1000186029
-F006	+N025	/20.B3	fuse 5A motor control	1000186026
-F007	+CB	/21.A7	fuse 3A Immobiliser	1000085680
-F009	+CB	/33.A3	fuse 7.5A Radio	1000095374
-F010	+CB	/21.A4	fuse 3A Joystick	1000085680
-F011	+CB	/56.A6	fuse 10A Rear wiper motor	1000085682
-F012	+CB	/46.A3	fuse 12A 12 V power outlet	1000085683
-F013	+CB	/24.A3	fuse 5A Safe load indicator, Coolant level sensor	1000052490
-F014	+CB	/13.A2	fuse 5A Handbrake switch, Load stabiliser, Operator presence switch	1000052490
-F015	+CB	/41.A3	fuse 7.5A Rotating beacon	1000095374
-F016	+CB	/30.A1	fuse 20A Light switch	1000085684
-F017	+CB	/30.A2	fuse 10A Side marker light left	1000085682
-F018	+CB	/30.A4	fuse 10A Side marker light right	1000085682
-F019	+CB	/30.A7	fuse 7.5A Low beam left	1000095374
-F020	+CB	/30.A7	fuse 7.5A Low beam right	1000095374
-F021	+CB	/30.A8	fuse 7.5A High beam left	1000095374
-F022	+CB	/30.A8	fuse 7.5A High beam right	1000095374
-F023	+CB	/20.A6	fuse 3A Display and Buzzer	1000085680
-F024	+CB	/21.A5	fuse 3A Immobiliser and Camera	1000085680
-F025	+CB	/30.A5	fuse 20A Light switch	1000085684
-F026	+CB	/56.A3	fuse 20A Horn and Front wiper motor	1000085684
-F027	+CB	/13.A5	fuse 10A Brake lights	1000085682
-F028	+CB	/29.A4	fuse 3A Window heating and Autohitch	1000085680
-F029	+CB	/31.A1	fuse 15A Front working light	1000085683
-F030	+CB	/31.A3	fuse 15A Rear working light	1000085683
-F031	+CB	/20.A7	fuse 5A motor control, diagnostics, Telematics module	1000052490
-F032	+CB	/21.A1	fuse 5A Keypad, Jog dial, Joystick	1000052490
-F033	+CB	/31.A5	fuse 15A Working head lamps Telescopic boom	1000085683
-F034	+CB	/45.A2	fuse 15A Front power outlet	1000085683
-F035	+CB	/28.A1	fuse 25A heating, Air conditioning	1000085685
-F036	+CB	/29.A1	fuse 30A Window heating	1000052491

KRAMER
Kramer Werke GmbH
Wacker Neuson Straße 1 / D- 88630 Pfullendorf
Tel.: +49 (0) 7552 9288 -0
Fax: +49 (0) 7552 9288 -49

Diese Zeichnung darf ohne unsere ausdrückliche Genehmigung weder vervielfältigt, noch dritten Personen oder Mitbewerbern im Original oder als Kopie ausgehändigt werden. Eigentums- und Urheberrecht vorbehalten.

	date	name
User		Inzkraum
Proved		
Reading station		

Betriebsmittelverzeichnis
-

Mat. -Nr. 1000364531 Doc. -Nr. 2060093317

Revision
Ersetzt Version
Gewicht in [kg]

A3

BMK	Ort	Position	Identifier_Text	SAP_ArticleNumber
-F037	+CB	/33.A2	fuse 7.5A Radio	1000095374
-F038	+CB	/23.A1	fuse 25A Operator seat	1000085685
-F040	+N025	/20.A4	fuse 80A Main controls	1000325756
-F041	+N025	/20.B2	fuse 15A Traction electronics	1000186028
-F042	+N025	/20.B2	fuse 10A Main controls	1000114140
-F043	+N025	/35.B3	fuse 7.5A Ignition and starting switch	1000186027
-F051	+N025	/27.B8	fuse 20A starter	1000186029
-F052	+N025	/27.C3	fuse 5A EGR valve	1000186026
-F059	+N025	/44.A1	fuse 30A Front power outlet 14-pole	1000325751
-F080	+CB	/55.A1	fuse 20A Hazard lights switch	1000085684
-F081	+CB	/20.A5	fuse 3A Main controls	1000085680
-F082	+N025	/38.A2	fuse 3A Pressure relief	1000186025
-F083	+N025	/22.B2	fuse Diesel particulate filter	1000186028
-F084	+N025	/19.B4	fuse 7.5A Central lubrication system	1000186027
-F086	+CBW	/20.D4	fuse 10A Main controls	1000114140
-F087	+CBW	/20.D4	fuse 10A Main controls	1000114140
-F088	+CBW	/20.D4	fuse 10A Main controls	1000114140
-F089	+CBW	/20.D4	fuse 10A Main controls	1000114140
-F090	+CBW	/20.D5	fuse 10A Main controls	1000114140
-F091	+CBW	/20.D5	fuse 10A Main controls	1000114140
-G001	+EBW	/25.E1	Contact generator	1000127092
-G002	+EB	/35.C1	Battery	1000301731
GND	+CB	/5.D2	Main board (fuses & relays)	1000335043
-GND	+CBW	/38.E3	Contact Earth	1000126891
-GND	+FRW	/38.D3	Contact Earth	1000126891
-GND1	+FRW	/38.D3	Contact Earth	1000126891
-GND2	+FRW	/38.E3	Contact Earth	1000126891
-GNDS	+EBW	/57.D5	Contact Earth	1000107757
-H028	+CB	/41.D3	Rotating beacon	1000155042
-H076	+CB	/30.F7	Combined front left light	1000276032
-H076	+CBW	/30.D7	Plug connector Combined front left light	1000027431

KRAMER
Kramer Werke GmbH
Wacker Neuson Straße 1 / D- 88630 Pfullendorf
Tel.: +49 (0) 7552 9288 -0
Fax: +49 (0) 7552 9288 -49

Diese Zeichnung darf ohne unsere ausdrückliche Genehmigung weder vervielfältigt, noch dritten Personen oder Mitbewerbern im Original oder als Kopie ausgehändigt werden. Eigentums- und Urheberrecht vorbehalten.

	date	name
User		Inzkraum
Proved		
Reading station		

Betriebsmittelverzeichnis
-

Mat. -Nr. 1000364531 Doc. -Nr. 2060093317

Revision
Ersetzt Version
Gewicht in [kg]

A3

BMK	Ort	Position	Identifier_Text	SAP_ArticleNumber
-H077	+FR	/30.F7	Combined front right light	1000276034
-H077	+FRW	/30.D7	Plug connector Combined front right light	1000027431
-H078	+FR	/30.D3	Combined rear left light	1000136352
-H078	+FRW	/55.E5	Plug connector Combined rear left light	1000104286
-H079	+FR	/30.D4	Combined rear right light	1000136352
-H079	+FRW	/55.E8	Plug connector Combined rear right light	1000104286
K010	+CB	/5.D2	Main board (fuses & relays)	1000335043
K025	+CB	/5.D2	Main board (fuses & relays)	1000335043
-K001	+EB	/35.F2	High-current relay	1000059162
-K003	+CB	/39.F4	Switching relays Machine travel Reverse	1000154043
-K007	+N025	/27.F4	High-current relay Start	1000125244
-K010	+CB	/55.A4	Turn indicator relay	1000339804
-K016	+CB	/45.F2	Switching relays Front power outlet	1000125244
-K016	+N032	/44.B6	relay Front power outlet 14-pole	1000125244
-K023	+CB	/56.E3	Switching relays Wiper Level 1	1000154043
-K023	+CB	/5.D2	Main board (fuses & relays)	1000335043
-K025	+CB	/56.A4	Intermittent-wipe relay	1000105146
-K027	+CB	/29.C4	Time lag relay 5 min	1000027088
-K027	+CBW		Relay pedestal Time lag relay 5 min	1000135648
-K030	+CB	/13.F5	relay Brake lights	1000125244
-K033	+CB	/29.F3	relay Rear window heating	1000125244
-K042	+N025	/27.F3	Switching relays Engine electronics	1000125244
-K047	+CB	/31.F3	Switching relays Working head lamps	1000125244
-K048	+CB	/31.F1	Switching relays Working head lamps	1000125244
-K049	+CB	/31.F5	Switching relays Working head lamps	1000125244
-K058	+CB	/5.D2	Main board (fuses & relays)	1000335043
-K088	+N025	/27.F5	Switching relays Diesel Feed pump	1000125244
-K095	+N032	/44.B3	relay Front power outlet 14-pole	1000125244
-K096	+N032	/44.B3	relay Front power outlet 14-pole	1000125244
-K097	+N032	/44.B4	relay Front power outlet 14-pole	1000125244
-K098	+N032	/44.B4	relay Front power outlet 14-pole	1000125244

KRAMER
Kramer Werke GmbH
Wacker Neuson Straße 1 / D- 88630 Pfullendorf
Tel.: +49 (0) 7552 9288 -0
Fax: +49 (0) 7552 9288 -49

Diese Zeichnung darf ohne unsere ausdrückliche Genehmigung weder vervielfältigt, noch dritten Personen oder Mitbewerbern im Original oder als Kopie ausgehändigt werden. Eigentums- und Urheberrecht vorbehalten.

	date	name
User		Inzkraum
Proved		
Reading station		

Betriebsmittelverzeichnis
-

Mat. -Nr. 1000364531 Doc. -Nr. 2060093317

Revision
Ersetzt Version
Gewicht in [kg]

BMK_05/105

A3

BMK	Ort	Position	Identifier_Text	SAP_ArticleNumber
-K100	+N032	/44.B5	relay Front power outlet 14-pole	1000125244
-K101	+CB	/45.F1	Switching relays Front power outlet Chute UP (E)	1000125244
-K101	+N032	/44.B5	relay Front power outlet 14-pole	1000125244
-K102	+CB	/45.F1	Switching relays Front power outlet Push button (J)	1000125244
-K102	+N032	/44.B6	relay Front power outlet 14-pole	1000125244
-K104	+CB	/23.E5	relay Start interlock Operator presence switch	1000125244
-K104	+CBW	/27.A6	Relay pedestal K104	1000114134
-K105	+CB	/13.E1	relay Start interlock Handbrake switch	1000125244
-K105	+CBW	/27.A7	Relay pedestal K105	1000114134
-K114	+CB	/41.F2	Rotating beacon	1000125244
-K137	+N025	/22.E3	relay Release Regeneration	1000125244
-K146	+CB	/23.E7	relay Start interlock Seat belt contact switch	1000125244
-K146	+CBW	/27.A7	Relay pedestal K106	1000114134
-M001	+EBW	/25.E2	Contact Alternator	1000127092
-M001.1	+EBW	/25.E2	Contact Alternator	1000050030
-M002	+CB	/56.D4	Front wiper motor	1000253075
-M002	+CBW	/56.E4	Plug connector Front wiper motor	1000187268
-M003	+CB	/56.D6	Rear wiper motor	1000284961
-M003	+CBW	/56.D6	Plug connector Rear wiper motor	1000176122
-M004	+CB	/28.D5	Fan	1000236669
-M004	+CBW	/28.D5	Plug connector Fan	1000095325
-M005	+CB	/56.D2	Front wipe/wash pump	1000168220
-M005	+CBW	/56.D2	Plug connector Front wipe/wash pump	1000095323
-M009	+EBW	/27.D2	Plug connector fuel pump	1000110449
-M016	+FRW	/19.D4	Plug connector Central lubrication system	1000027438
-M016.1	+FRW	/19.D4	Plug connector Central lubrication system	1000027445
N025	+EBW	/8.C3	Fuse box Engine bay	1000301696
-N001	+EB	/9.C2	Control valve H1 pump	1000248717
-N004	+CB	/7.B1	Main controls Cabin controller	1000334532
-N005	+EB	/3.A1	Diesel engine electronics	1000355046
-N007	+DP	/22.C2	Diesel particulate filter Kit	1000341215

KRAMER
Kramer Werke GmbH
Wacker Neuson Straße 1 / D- 88630 Pfullendorf
Tel.: +49 (0) 7552 9288 -0
Fax: +49 (0) 7552 9288 -49

Diese Zeichnung darf ohne unsere ausdrückliche Genehmigung weder vervielfältigt, noch dritten Personen oder Mitbewerbern im Original oder als Kopie ausgehändigt werden. Eigentums- und Urheberrecht vorbehalten.

	date	name
User		Inzkraum
Proved		
Reading station		

Betriebsmittelverzeichnis
-

Mat. -Nr. 1000364531 Doc. -Nr. 2060093317

Revision
Ersetzt Version
Gewicht in [kg]

A3

BMK	Ort	Position	Identifier_Text	SAP_ArticleNumber
-N007	+DPW	/22.C2	Dummy connector Plug connector Diesel particulate filter	1000105124
-N007	+EBW	/22.B2	Plug connector Diesel particulate filter	1000105122
-N007.1	+EBW	/22.B2	Pin housing Plug connector Diesel particulate filter	1000105124
-N021	+CB	/12.B4	Immobiliser	1000302412
-N021	+CBW	/27.B6	Plug connector Immobiliser	1000148271
-N023	+CB	/21.D3	HMI Jog dial	1000292611
-N023	+CBW	/21.C3	Plug connector HMI Jog dial	1000104286
-N025	+EBW	/8.C3	Fuse box Engine bay	1000301696
-N031	+CB	/10.C4	Camera system switchbox	1000315899
-N033	+CB	/5.D2	Main board (fuses & relays)	1000335043
-N034	+CB	/6.C3	Relay board	1000310922
-P006	+CB	/11.C3	Safe load indicator	1000339626
-P006	+CBW	/34.C4	Plug connector Safe load indicator	1000105113
-P014	+CB	/2.C3	Indicating instrument	
-P016	+CB	/14.B3	Screen Camera	
-R002	+CBW	/49.B8	Plug connector Inching potentiometer	1000262118
-R003	+CBW	/49.C8	Creep gear potentiometer	1000238088
-R006	+CB	/29.D1	Rear window heating	1000253068
-R009	+EB	/20.E8	Fuel preheater	1000336999
-R011	+CB	/26.D2	Accelerator pedal	1000166874
-R011	+CBW	/26.C2	Plug connector Accelerator pedal	1000166646
-R012	+CB	/26.D4	Manual throttle	1000282991
-R012	+CBW	/26.C4	Plug connector Manual throttle	1000238088
-R023	+FR	/50.D3	Angle transmitter Lifting arm monitoring	1000278176
-R023	+FRW	/50.C3	Plug connector Angle transmitter Lifting arm monitoring	1000262118
-R026	+CBW	/15.D3	Bus terminating resistance 120 Ohm	1000190317
-R027	+FRW	/18.D7	Bus terminating resistance 120 Ohm	1000278564
-R037	+EBW	/24.D6	Resistor module 100 Ohm	1000325407
-R046	+CB	/29.D2	Window heating page	1000253069
-R930	+FRW	/47.C4	Resistor 3k6	1000312305
-R933	+FRW	/52.C5	Resistor 3k6	1000312305

KRAMER
Kramer Werke GmbH
Wacker Neuson Straße 1 / D- 88630 Pfullendorf
Tel.: +49 (0) 7552 9288 -0
Fax: +49 (0) 7552 9288 -49

Diese Zeichnung darf ohne unsere ausdrückliche Genehmigung weder vervielfältigt, noch dritten Personen oder Mitbewerbern im Original oder als Kopie ausgehändigt werden. Eigentums- und Urheberrecht vorbehalten.

	date	name
User		Inzkraum
Proved		
Reading station		

Betriebsmittelverzeichnis
-

Mat. -Nr. 1000364531 Doc. -Nr. 2060093317

Revision
Ersetzt Version
Gewicht in [kg]

A3

BMK	Ort	Position	Identifier_Text	SAP_ArticleNumber
-R934	+FRW	/52.C6	Resistor 3k6	1000312305
-R935	+FRW	/36.C3	Resistor 3k6	1000312305
-R936	+CBW	/23.D5	Resistor 3k6	1000312305
-R950	+FRW	/47.C4	Resistor 18k	1000312306
-R951	+FRW	/52.C5	Resistor 18k	1000312306
-R952	+FRW	/52.C6	Resistor 18k	1000312306
-R953	+FRW	/36.C4	Resistor 18k	1000312306
-R954	+CBW	/23.C7	Resistor 18k	1000312306
-S001	+CB	/27.F6	Ignition and starting switch	1000333424
-S004	+EB		pressure switch Air filter	1000276951
-S004	+EBW	/32.D4	Plug connector pressure switch Air filter	1000027410
-S005	+EB	/32.D5	Pressure switch, hydraulic oil	1000051961
-S005	+EBW	/32.D5	Pressure switch, hydraulic oil	1000019583
-S005.1	+EBW	/32.E5	Pressure switch, hydraulic oil	1000019583
-S006	+EN	/24.D5	Temperature switch Hydraulic oil	1000027555
-S008	+EB	/35.D1	Battery master switch	1000288219
-S011	+CB	/13.D2	Handbrake switch	1000020275
-S011	+CBW	/13.D2	Plug connector Handbrake switch	1000105096
-S012	+CB	/55.E2	Steering-column control lever left	1000276751
-S014	+CB	/30.F1	Light switch	1000051958
-S014	+CBW	/30.B5	Plug connector Light switch	1000103949
-S015	+CB	/28.B1	switch heating	1000102987
-S015	+CBW	/28.B1	Plug connector switch heating	1000086664
-S019	+CB	/55.C1	Hazard lights switch	1000332615
-S019	+CBW	/55.B1	Plug connector Hazard lights switch	1000104430
-S020	+CB	/56.F6	switch Wiper/washer	1000098269
-S020	+CBW		Plug connector switch Wiper/washer	1000103949
-S040	+CB	/50.E1	button Quickhitch lock	1000051971
-S040	+CBW	/50.C1	Plug connector button Quickhitch lock	1000103949
-S045	+FR		Load stabiliser pressure switch	1000276818
-S045	+FRW	/40.C1	Plug connector Load stabiliser pressure switch	1000110449

KRAMER
Kramer Werke GmbH
Wacker Neuson Straße 1 / D- 88630 Pfullendorf
Tel.: +49 (0) 7552 9288 -0
Fax: +49 (0) 7552 9288 -49

Diese Zeichnung darf ohne unsere ausdrückliche Genehmigung weder vervielfältigt, noch dritten Personen oder Mitbewerbern im Original oder als Kopie ausgehändigt werden. Eigentums- und Urheberrecht vorbehalten.

	date	name
User		Inzkraum
Proved		
Reading station		

Betriebsmittelverzeichnis
-

Mat. -Nr. 1000364531 Doc. -Nr. 2060093317

Revision
Ersetzt Version
Gewicht in [kg]

A3

BMK	Ort	Position	Identifier_Text	SAP_ArticleNumber
-S051	+CB	/28.F1	switch Air conditioning	1000051959
-S051	+CBW	/28.C1	Plug connector switch Air conditioning	1000103949
-S052	+CB	/28.E4	pressure switch Air conditioning	1000153692
-S052	+CBW	/28.E4	Plug connector pressure switch Air conditioning	1000095325
-S054	+CBW	/28.D1	Temperature switch Air conditioning	1000095323
-S058	+EB	/25.C5	Water separator	
-S058	+EBW	/25.C5	Water separator	1000319047
-S059	+CB	/29.B4	button Rear window heating	1000051971
-S059	+CBW	/29.C4	Plug connector button Rear window heating	1000103949
-S084	+CB	/50.E2	switch Switch for bypassing overload cutoff Overload	1000051971
-S084	+CBW	/50.C2	Plug connector switch Switch for bypassing overload cutoff Overload	1000103949
-S104	+CB	/23.D1	Operator presence switch	1000292193
-S104	+CBW	/23.C1	Plug connector Operator presence switch	1000299131
-S116	+TA	/50.F4	limit switch Telescopic boom	1000268713
-S116	+TAW	/50.E4	Plug connector limit switch Telescopic boom	1000313479
-S123	+CB	/23.C5	Seat belt contact switch	1000347471
-S123	+CBW	/23.C5	Plug connector Seat belt contact switch	1000027429
-S127	+BH	/38.B5	switch Pressure relief	1000285667
-S127	+BHW		Plug connector switch Pressure relief	1000104430
-S137	+RB	/53.C2	position switch Autohitch	1000309246
-S137	+RBW	/53.D2	Plug connector position switch Autohitch	1000299530
-S159	+FR	/52.C5	Rear button Rear linkage Raise	1000335089
-S159	+FRW	/52.B5	Plug connector Rear button Rear linkage Raise	1000051989
-S159.2	+FRW	/52.C4		1000265293
-S160	+FR	/52.C6	Rear button Rear linkage Lower	1000335090
-S160	+FRW	/52.B6	Plug connector Rear button Rear linkage Lower	1000051989
-S160.2	+FRW	/52.C7		1000265293
-S172	+FR	/47.C4	switch Detected Crab steering	1000328962
-S172	+FRW	/47.C4	Plug connector switch Detected Crab steering	1000337537
-S175	+FR	/36.C3	Rear button PTO shaft	1000349209
-S175	+FRW	/36.B3	Plug connector Rear button PTO shaft	1000051989

KRAMER
Kramer Werke GmbH
Wacker Neuson Straße 1 / D- 88630 Pfullendorf
Tel.: +49 (0) 7552 9288 -0
Fax: +49 (0) 7552 9288 -49

Diese Zeichnung darf ohne unsere ausdrückliche Genehmigung weder vervielfältigt, noch dritten Personen oder Mitbewerbern im Original oder als Kopie ausgehändigt werden. Eigentums- und Urheberrecht vorbehalten.

	date	name
User		Inzkraum
Proved		
Reading station		

Betriebsmittelverzeichnis
-

Mat. -Nr. 1000364531 Doc. -Nr. 2060093317

Revision
Ersetzt Version
Gewicht in [kg]

A3

BMK	Ort	Position	Identifier_Text	SAP_ArticleNumber
-S175.2	+FRW	/36.B3		1000265293
-SP01	+EBW	/57.C2	Splice	
-SP01	+N032	/44.C3	Splice	
-SP02	+EBW	/57.C4	Splice	
-SP02	+N032	/44.B3	Splice	
-SP03	+EBW	/57.C5	Splice	
-SP03	+N032	/44.B6	Splice	
-SP04	+EBW	/57.C7	Splice	
-SP04	+N032	/44.C2	Splice	
-SP05	+FRW	/50.E5	Splice	
-SP05	+N032	/44.E2	Splice	
-SP06	+FRW	/53.B2	Splice	
-SP07	+FRW	/52.B4	Splice	
-SP08	+FRW	/52.B5	Splice	
-SP09	+FRW	/52.D5	Splice	
-SP10	+FRW	/52.B6	Splice	
-SP11	+FRW	/58.C2	Splice	
-SP12	+FRW	/58.C4	Splice	
-SP13	+FRW	/58.C6	Splice	
-SP16	+FRW	/50.C3	Splice	
-SP21	+CBW	/59.C1	Splice	
-SP22	+CBW	/59.C3	Splice	
-SP22	+FRW	/18.D3	Splice	
-SP23	+CBW	/59.C4	Splice	
-SP23	+FRW	/18.D3	Splice	
-SP24	+CBW	/59.C6	Splice	
-SP25	+CBW	/59.C7	Splice	
-SP26	+CBW	/50.B1		
-SP32	+FRW	/47.B4	Splice	
-SP33	+FRW	/47.D4	Splice	
-SP37	+FRW	/50.D4	Splice	

KRAMER
Kramer Werke GmbH
Wacker Neuson Straße 1 / D- 88630 Pfullendorf
Tel.: +49 (0) 7552 9288 -0
Fax: +49 (0) 7552 9288 -49

Diese Zeichnung darf ohne unsere ausdrückliche Genehmigung weder vervielfältigt, noch dritten Personen oder Mitbewerbern im Original oder als Kopie ausgehändigt werden. Eigentums- und Urheberrecht vorbehalten.

	date	name
User		Inzkraum
Proved		
Reading station		

Betriebsmittelverzeichnis
-

Mat. -Nr. 1000364531 Doc. -Nr. 2060093317

Revision
Ersetzt Version
Gewicht in [kg]

A3

BMK	Ort	Position	Identifier_Text	SAP_ArticleNumber
-SP38	+FRW	/50.D4	Splice	
-SP40	+FRW	/13.D6	Splice	
-SP41	+FRW	/30.C3	Splice	
-SP43	+FRW	/30.D3	Splice	
-SP44	+FRW	/30.D4	Splice	
-SP46	+BHW	/37.D7	Splice	
-SP46	+FRW	/52.D6	Splice	
-SP56	+CBW	/50.A3	Splice	
-SP60	+CBW	/48.B2	Splice	
-SP62	+CBW	/24.E6	Splice	
-SP63	+CBW	/23.B4	Splice	
-SP64	+CBW	/26.B2	Splice	
-SP65	+CBW	/26.B2	Splice	
-SP66	+CBW	/26.D4	Splice	
-SP67	+CBW	/26.D4	Splice	
-SP68	+CBW	/28.D1	Splice	
-SP69	+CBW	/27.A7	Splice	
-SP70	+CBW	/27.B7	Splice	
-SP73	+CBW	/56.D2	Splice	
-SP75	+CBW	/56.D6	Splice	
-SP76	+FRW	/55.D7	Splice	
-SP77	+FRW	/55.D5	Splice	
-SP81	+CBW	/45.C2	Splice	
-SP90	+CBW	/20.C4	Splice	
-SP91	+CBW	/20.C4	Splice	
-SP92	+CBW	/20.F4	Splice	
-SP94	+CBW	/21.B1	Splice	
-SP97	+CBW	/23.D5	Splice	
-SP100	+CBW	/30.D6	Splice	
-SP102	+CBW	/55.D2	Splice	
-SP103	+CBW	/55.D3	Splice	

KRAMER
Kramer Werke GmbH
Wacker Neuson Straße 1 / D- 88630 Pfullendorf
Tel.: +49 (0) 7552 9288 -0
Fax: +49 (0) 7552 9288 -49

Diese Zeichnung darf ohne unsere ausdrückliche Genehmigung weder vervielfältigt, noch dritten Personen oder Mitbewerbern im Original oder als Kopie ausgehändigt werden. Eigentums- und Urheberrecht vorbehalten.

	date	name
User		Inzkraum
Proved		
Reading station		

Betriebsmittelverzeichnis
-

Mat. -Nr. 1000364531 Doc. -Nr. 2060093317

Revision
Ersetzt Version
Gewicht in [kg]

A3

BMK	Ort	Position	Identifier_Text	SAP_ArticleNumber
-SP104	+CBW	/49.D7	Splice	
-SP105	+CBW	/49.D7	Splice	
-SP107	+CBW	/49.B7	Splice	
-SP108	+CBW	/49.B7	Splice	
-SP109	+CBW	/16.D3	Splice	
-SP110	+CBW	/16.D3	Splice	
-SP111	+CBW	/15.C3	Splice	
-SP112	+CBW	/15.C3	Splice	
-SP113	+CBW	/28.E3	Splice	
-SP114	+CBW	/23.D4	Splice	
-SP115	+CBW	/13.D2	Splice	
-SP203	+EBW	/27.D4	Splice	
-SP205	+EBW	/35.C6	Splice	
-SP208	+EBW	/35.A3	Splice	
-SP209	+EBW	/20.A2	Splice	
-SP211	+EBW	/27.D1	Splice	
-SP215	+EBW	/17.C2	Splice	
-SP216	+EBW	/17.C2	Splice	
-SP217	+EBW	/20.B4	Splice	
-SP220	+EBW	/17.C4	Splice	
-SP221	+EBW	/17.D4	Splice	
-SP222	+EBW	/27.B3	Splice	
-SP223	+EBW	/24.C2	Splice	
-SP500	+BHW	/50.C6	Splice	
-SP500	+TAW	/31.D7	Splice	
-SP501	+BHW	/50.D6	Splice	
-SP501	+TAW	/31.E7	Splice	
-V001	+EBW	/35.D3	Diode	1000308919
-V002	+EBW	/25.C3	Diode	1000336503
-X001	+CBW	/15.E3	diagnostics- connector	1000312071
-X001	+N025	/20.A3	base Fuse box	1000301691

KRAMER
Kramer Werke GmbH
Wacker Neuson Straße 1 / D- 88630 Pfullendorf
Tel.: +49 (0) 7552 9288 -0
Fax: +49 (0) 7552 9288 -49

Diese Zeichnung darf ohne unsere ausdrückliche Genehmigung weder vervielfältigt, noch dritten Personen oder Mitbewerbern im Original oder als Kopie ausgehändigt werden. Eigentums- und Urheberrecht vorbehalten.

	date	name
User		Inzkraum
Proved		
Reading station		

Betriebsmittelverzeichnis
-

Mat. -Nr. 1000364531 Doc. -Nr. 2060093317

Revision
Ersetzt Version
Gewicht in [kg]

A3

BMK	Ort	Position	Identifier_Text	SAP_ArticleNumber
-X001	+N032	/44.C3	Relay pedestal Front power outlet 14-pole	1000295341
-X002	+EBW		Contact- Housing Fuse box	1000325528
-X002	+N032	/44.C4	Relay pedestal Front power outlet 14-pole	1000295341
-X003	+CB	/5.D2	Main board (fuses & relays)	1000335043
-X003	+CBW	/27.B7	Plug connector	1000095370
-X003	+N032	/44.C5	Relay pedestal Front power outlet 14-pole	1000295341
-X004	+CB	/5.D2	Main board (fuses & relays)	1000335043
-X004	+CBW	/27.B7	Plug connector Main board (fuses & relays)	1000095367
-X004	+N025	/27.B1	Plug connector Main board (fuses & relays)	1000303938
-X004	+N032	/44.C6	Relay pedestal Front power outlet 14-pole	1000295341
-X005	+CB	/5.D2	Main board (fuses & relays)	1000335043
-X005	+EBW	/35.D1	Contact Battery master switch	
-X005	+N025	/27.B3	Fuse holder	1000303938
-X006	+CB	/5.D2	Main board (fuses & relays)	1000335043
-X007	+EBW	/35.B5	Contact High-current relay	1000127092
-X008	+EBW	/35.C5	Contact High-current relay	1000127092
-X008.1	+EBW	/35.C5	Contact High-current relay	1000127092
-X010	+CB	/5.D2	Main board (fuses & relays)	1000335043
-X010	+CBW		Plug connector Ignition and starting switch	1000027368
-X011	+CB	/5.D2	Main board (fuses & relays)	1000335043
-X011	+CBW	/35.C3	Plug connector Ignition and starting switch	1000027386
-X012	+CB	/5.D2	Main board (fuses & relays)	1000335043
-X013	+EBW	/19.B4	Disconnect Central lubrication system	1000027438
-X013	+FRW	/19.C4	Disconnect Central lubrication system	1000027445
-X016	+FRW	/18.D6	Plug connector Bus terminating resistance	1000027429
-X017	+FRW	/50.D4	Disconnect Chassis- Telescopic boom	1000104286
-X017	+TAW	/50.E4	Disconnect Chassis- Telescopic boom	1000104284
-X020	+CBW	/20.C4	Plug connector fuse F086	
-X020	+EBW	/20.C8	Plug connector Fuel preheater	1000027435
-X021	+CBW	/20.D4	Plug connector fuse F086	
-X022	+CBW	/20.C4	Plug connector fuse F087	

KRAMER
Kramer Werke GmbH
Wacker Neuson Straße 1 / D- 88630 Pfullendorf
Tel.: +49 (0) 7552 9288 -0
Fax: +49 (0) 7552 9288 -49

Diese Zeichnung darf ohne unsere ausdrückliche Genehmigung weder vervielfältigt, noch dritten Personen oder Mitbewerbern im Original oder als Kopie ausgehändigt werden. Eigentums- und Urheberrecht vorbehalten.

	date	name
User		Inzkraum
Proved		
Reading station		

Betriebsmittelverzeichnis
-

Mat. -Nr. 1000364531 Doc. -Nr. 2060093317

Revision
Ersetzt Version
Gewicht in [kg]

A3

BMK	Ort	Position	Identifier_Text	SAP_ArticleNumber
-X023	+CBW	/20.D4	Plug connector fuse F087	
-X024	+CBW	/20.C4	Plug connector fuse F088	
-X025	+CBW	/20.D4	Plug connector fuse F088	
-X026	+CBW	/20.C4	Plug connector fuse F089	
-X027	+CBW	/20.D4	Plug connector fuse F089	
-X028	+CBW	/20.C5	Plug connector fuse F090	
-X028	+EBW	/35.B5	Contact fuse F001	1000126891
-X029	+CBW	/20.D5	Plug connector fuse F090	
-X029	+EBW	/35.B6	Contact fuse F002	1000126891
-X030	+CBW	/20.C5	Plug connector fuse F091	
-X030	+EBW	/44.A1	Contact fuse F059	1000130562
-X031	+CBW	/20.D5	Plug connector fuse F091	
-X031	+EBW	/20.A4	Contact fuse F040	1000128451
-X032	+FRW	/55.E6	Disconnect Chassis- Rear power outlet	1000027431
-X032	+RSW	/55.E6	Disconnect Chassis- Rear power outlet	1000085023
-X033	+FRW	/53.D2	Disconnect position switch Autohitch	1000299530
-X033	+RBW	/53.D2	Disconnect position switch Autohitch	1000237955
-X034	+FRW	/31.D6	Disconnect Working head lamps Telescopic boom	1000027438
-X034	+TAW	/31.D7	Disconnect Working head lamps Telescopic boom	1000027445
-X036	+EBW	/44.C1	Disconnect Front power outlet 14-pole	1000321508
-X036	+N032	/44.D1	Disconnect Front power outlet 14-pole	1000321507
-X038	+CBW	/30.B1	Plug connector Interior light	1000027435
-X039	+CBW	/30.C1	Plug connector Interior light	1000027435
-X040	+CBW	/29.D1	Plug connector Rear window heating	1000019583
-X041	+CBW	/29.E1	Plug connector Rear window heating	1000019583
-X042	+CBW	/29.D2	Plug connector Window heating page	1000019583
-X043	+CBW	/29.E2	Plug connector Window heating page	1000019583
-X045	+CB	/21.C5	connection-cable Camera system switchbox	1000027394
-X045	+CBW	/21.C5	Disconnect Camera system switchbox	1000027429
-X050	+CBW	/41.D3	Plug connector Rotating beacon	1000027435
-X050	+EBW	/24.C5	Plug connector Temperature switch S006	1000027435

KRAMER
Kramer Werke GmbH
Wacker Neuson Straße 1 / D- 88630 Pfullendorf
Tel.: +49 (0) 7552 9288 -0
Fax: +49 (0) 7552 9288 -49

Diese Zeichnung darf ohne unsere ausdrückliche Genehmigung weder vervielfältigt, noch dritten Personen oder Mitbewerbern im Original oder als Kopie ausgehändigt werden. Eigentums- und Urheberrecht vorbehalten.

	date	name
User		Inzkraum
Proved		
Reading station		

Betriebsmittelverzeichnis
-

Mat. -Nr. 1000364531 Doc. -Nr. 2060093317

Revision
Ersetzt Version
Gewicht in [kg]

A3

BMK	Ort	Position	Identifier_Text	SAP_ArticleNumber
-X051	+CBW	/41.D3	Plug connector Rotating beacon	1000095371
-X051	+EBW	/24.D5	Plug connector Temperature switch S006	1000027435
-X053	+CBW		Plug connector Radio	1000104902
-X054	+CBW	/33.D2	Plug connector Radio	1000104903
-X055	+CBW	/33.E2	Plug connector speaker	1000104405
-X056	+CBW	/33.E2	Plug connector speaker	1000027370
-X057	+CBW	/33.E3	Plug connector speaker	1000104405
-X058	+CBW	/33.E3	Plug connector speaker	1000027370
-X082	+N025	/38.A2	Fuse holder	1000303938
-X083	+N025	/22.B2	Fuse holder	1000303938
-X084	+N025	/19.B4	Fuse holder	1000303938
-X085	+EBW	/35.D3	Plug connector High-current relay K001	1000019583
-X086	+CBW	/20.D4	Fuse holder F086	1000114137
-X086	+EBW	/35.E3	Plug connector High-current relay K001	1000019583
-X087	+CBW	/20.D4	Fuse holder F087	1000114137
-X088	+CBW	/20.D4	Fuse holder F088	1000114137
-X089	+CBW	/20.D4	Fuse holder F089	1000114137
-X090	+CBW	/20.D5	Fuse holder F090	1000114137
-X091	+CBW	/20.D5	Fuse holder F091	1000114137
-X099	+EBW	/35.A4	Contact Fuse box	1000126891
-X099.1	+EBW	/35.A4	Contact Fuse box	1000107757
-X100	+EBW	/35.B1	Battery terminal plus Terminal	1000337611
-X101	+EBW	/35.B1	Contact Battery terminal	1000099150
-X200	+EB	/35.C1	Battery terminal Negative Terminal	1000337612
-X300	+EBW	/35.E1	Contact Battery master switch	
-X301	+CB	/6.C3	Relay board	1000310922
-X301	+EBW	/35.E1	Contact Battery master switch	
-X302	+CB	/6.C3	Relay board	1000310922
-X303	+CB	/6.C3	Relay board	1000310922
-X401	+BHW2	/37.B6	Disconnect Telescopic boom- Boom head	1000100595
-X401	+TPW2	/37.B6	Disconnect Telescopic boom- Boom head	1000085009

KRAMER
Kramer Werke GmbH
Wacker Neuson Straße 1 / D- 88630 Pfullendorf
Tel.: +49 (0) 7552 9288 -0
Fax: +49 (0) 7552 9288 -49

Diese Zeichnung darf ohne unsere ausdrückliche Genehmigung weder vervielfältigt, noch dritten Personen oder Mitbewerbern im Original oder als Kopie ausgehändigt werden. Eigentums- und Urheberrecht vorbehalten.

	date	name
User		Inzkraum
Proved		
Reading station		

Betriebsmittelverzeichnis
-

Mat. -Nr. 1000364531 Doc. -Nr. 2060093317

Revision
Ersetzt Version
Gewicht in [kg]

A3

BMK	Ort	Position	Identifier_Text	SAP_ArticleNumber
-X402	+BHW		Disconnect Telescopic boom- Boom head	1000105124
-X402	+TPW		Disconnect Telescopic boom- Boom head	1000105122
-X402	+TPW			1000105124
-XA01	+CBW		Plug connector Indicating instrument	1000306921
-XE04	+CBW	/20.D4	Plug connector Main controls Cabin controller	1000337209
-XE05	+EBW	/20.D2	Plug connector Control valve H1 pump	1000148250
-XE09	+EBW	/49.B6	Plug connector Control valve H1 pump	1000148271
-XE10	+EBW	/39.B4	Plug connector Control valve H1 pump	1000027445
-XE13	+EBW	/17.E2	Plug connector Control valve H1 pump	1000183222
-XE15	+CBW		Plug connector Main controls Cabin controller	1000337210
-XE32	+N032	/44.A2	Plug connector Control valve Front power outlet 14-pole	1000306993
-XE90	+CBW	/21.D7	Plug connector Telematics module	1000254182
-XL00	+CBW	/55.D2	Plug connector Steering-column control lever	1000187268
-XL01	+CBW	/56.B3	Plug connector Steering-column control lever	1000173083
-XM01	+EBW	/22.D5	Plug connector motor control	1000317195
-XP01	+CBW	/35.D7	Contact Main board (fuses & relays) Kl.30	1000099150
-XP02	+CBW	/35.D5	Contact Main board (fuses & relays) Kl.15	1000126891
-XP03	+CBW		Plug connector Main board (fuses & relays)	1000104432
-XP04	+CBW	/41.B3	Plug connector Main board (fuses & relays)	1000100971
-XP05	+CBW	/31.B3	Plug connector Main board (fuses & relays)	1000104432
-XP06	+CB	/5.D2	Main board (fuses & relays)	1000335043
-XP06	+CBW		Plug connector Main board (fuses & relays)	1000100971
-XP07	+CBW	/30.E1	Contact Main board (fuses & relays) Light switch	1000050025
-XP08	+CBW	/30.D5	Contact Main board (fuses & relays) Low beam	1000050027
-XP09	+CBW	/30.D6	Contact Main board (fuses & relays) High beam	1000128452
-XP10	+CBW	/55.B4	Plug connector Main board (fuses & relays) Turn indicator relay	1000187268
-XP11	+CBW		Plug connector Main board (fuses & relays) Intermittent-wipe relay	1000104431
-XP15	+CBW	/13.C4	Contact Main board (fuses & relays) Earth	1000050027
-XP16	+CBW	/45.C3	Plug connector Relay board	1000099055
-XP17	+CBW		Plug connector Relay board	1000346706
-XP18	+CBW		Plug connector Relay board	1000346707

KRAMER
Kramer Werke GmbH
Wacker Neuson Straße 1 / D- 88630 Pfullendorf
Tel.: +49 (0) 7552 9288 -0
Fax: +49 (0) 7552 9288 -49

Diese Zeichnung darf ohne unsere ausdrückliche Genehmigung weder vervielfältigt, noch dritten Personen oder Mitbewerbern im Original oder als Kopie ausgehändigt werden. Eigentums- und Urheberrecht vorbehalten.

	date	name
User		Inzkraum
Proved		
Reading station		

Betriebsmittelverzeichnis
-

Mat. -Nr. 1000364531 Doc. -Nr. 2060093317

Revision
Ersetzt Version
Gewicht in [kg]

A3

BMK	Ort	Position	Identifier_Text	SAP_ArticleNumber
-XR01	+CBW	/49.B7	Disconnect Cabin- Engine bay	1000303405
-XR01	+EBW	/49.B7	Disconnect Cabin- Engine bay	1000260163
-XR02	+CBW	/31.C2	Disconnect Cabin- Chassis	1000303404
-XR02	+FRW	/31.D2	Disconnect Cabin- Chassis	1000303401
-XR03	+CBW	/35.D7	Disconnect Cabin- Engine bay Kl. 30	1000346709
-XR03	+EBW	/35.D7	Disconnect Cabin- Engine bay Kl. 30	1000346708
-XR04	+CBW	/35.D5	Disconnect Cabin- Engine bay Kl. 15	1000147060
-XR04	+EBW	/35.D5	Disconnect Cabin- Engine bay Kl. 15	1000147131
-XR05	+FRW	/50.E7	Disconnect Chassis- Telescopic boom	1000105121
-XR05	+TPW	/50.E7	Disconnect Chassis- Telescopic boom	1000100595
-XR06	+FRW	/37.B4	Disconnect Chassis- Telescopic boom	1000105122
-XR06	+N032	/37.B5	Disconnect Chassis- Telescopic boom	1000105122
-XR06	+TPW2	/37.B5	Disconnect Chassis- Telescopic boom	1000105124
-XR06.1	+N032	/37.B5	Disconnect Chassis- Telescopic boom	1000105124
-XX01	+RSW	/55.F6	Rear power outlet	1000027230
-XX03	+BHW		Front power outlet 14-pole	1000275852
Y002	+FR	/49.D2	Solenoid valve PCOR	1000241326
Y010	+FR	/49.D2	Solenoid valve PCOR	1000241326
-Y002	+EBW	/49.D2	Plug connector Solenoid valve PCOR	1000027438
-Y002	+FR	/49.D2	Solenoid valve PCOR	1000241326
-Y009	+FR		Solenoid valve Differential lock	1000103961
-Y009	+FRW	/43.D4	Plug connector Solenoid valve Differential lock	1000027332
-Y010	+EBW	/49.D3	Plug connector Solenoid valve Travel direction	1000027438
-Y016	+FR	/37.C4	Solenoid valve Quickhitch Lock	1000328919
-Y016	+FRW	/37.C4	Plug connector Solenoid valve Quickhitch Lock	1000027438
-Y017	+FR	/37.C5	Solenoid valve Quickhitch Unlock	1000328919
-Y017	+FRW	/37.C5	Plug connector Solenoid valve Quickhitch Unlock	1000027438
-Y020	+FR	/40.D3	Solenoid valve Load stabiliser	1000189585
-Y020	+FRW	/40.D3	Plug connector Solenoid valve Load stabiliser	1000027332
-Y021	+FR	/40.D5	Solenoid valve Load stabiliser	1000274651
-Y021	+FRW	/40.D5	Plug connector Solenoid valve Load stabiliser	1000027332

KRAMER
Kramer Werke GmbH
Wacker Neuson Straße 1 / D- 88630 Pfullendorf
Tel.: +49 (0) 7552 9288 -0
Fax: +49 (0) 7552 9288 -49

Diese Zeichnung darf ohne unsere ausdrückliche Genehmigung weder vervielfältigt, noch dritten Personen oder Mitbewerbern im Original oder als Kopie ausgehändigt werden. Eigentums- und Urheberrecht vorbehalten.

	date	name
User		Inzkraum
Proved		
Reading station		

Betriebsmittelverzeichnis
-

Mat. -Nr. 1000364531 Doc. -Nr. 2060093317

Revision
Ersetzt Version
Gewicht in [kg]

A3

BMK	Ort	Position	Identifier_Text	SAP_ArticleNumber
-Y023	+FR	/51.D3	Solenoid valve Telescopic boom retract	1000328919
-Y023	+FRW	/51.D3	Plug connector Solenoid valve Telescopic boom retract	1000027438
-Y024	+FR	/51.C3	Solenoid valve Telescopic boom release	1000328919
-Y024	+FRW	/51.D3	Plug connector Solenoid valve Telescopic boom release	1000027438
-Y025	+BH	/37.C7	Solenoid valve Quickhitch lock	1000027822
-Y025	+BHW	/37.C7	Plug connector Solenoid valve Quickhitch lock	1000000455
-Y031	+EB	/28.E2	Solenoid valve Air conditioning compressor	1000106938
-Y031	+EBW	/28.E2	Plug connector Solenoid valve Air conditioning compressor	1000288496
-Y035	+EB	/24.E2	Solenoid valve ventilator	1000270625
-Y035	+EBW	/24.E2	Plug connector Solenoid valve ventilator	1000027438
-Y037	+EB	/24.E1	Solenoid valve Reversing fan	1000270625
-Y037	+EBW	/24.E1	Plug connector Solenoid valve Reversing fan	1000027410
-Y044	+FR	/53.D4	Solenoid valve Additional control circuit	1000328920
-Y044	+FRW	/53.D4	Plug connector Solenoid valve Additional control circuit	1000027438
-Y045	+FR	/53.D5	Solenoid valve Additional control circuit	1000328920
-Y045	+FRW	/53.D5	Plug connector Solenoid valve Additional control circuit	1000027438
-Y046	+FR	/53.D6	Solenoid valve Switchover Additional control circuit	1000190150
-Y046	+FRW	/53.D6	Plug connector Solenoid valve Switchover Additional control circuit	1000027410
-Y047	+EB		Solenoid valve Auto-hitch unlocking	1000052097
-Y047	+EBW	/53.D6	Plug connector Solenoid valve Auto-hitch unlocking	1000027332
-Y051	+BH		Solenoid valve Switchover 3. Control circuit	1000146528
-Y051	+BHW	/37.C7	Plug connector Solenoid valve Switchover 3. Control circuit	1000000455
-Y066	+FR	/51.D4	Solenoid valve Boom Raise	1000328919
-Y066	+FRW	/51.D4	Plug connector Solenoid valve Boom Raise	1000027438
-Y067	+FR	/51.C4	Solenoid valve Boom Lower	1000328919
-Y067	+FRW	/51.D4	Plug connector Solenoid valve Boom Lower	1000027438
-Y068	+FR	/51.D5	Solenoid valve Tilt cylinder Tilt in	1000328919
-Y068	+FRW	/51.D5	Plug connector Solenoid valve Tilt cylinder Tilt in	1000027438
-Y069	+FR	/51.C5	Solenoid valve Tilt cylinder Tilt out	1000328919
-Y069	+FRW	/51.D5	Plug connector Solenoid valve Tilt cylinder Tilt out	1000027438
-Y106	+FR	/38.E5	Solenoid valve Pressure relief 3. Control circuit	1000273039

KRAMER
Kramer Werke GmbH
Wacker Neuson Straße 1 / D- 88630 Pfullendorf
Tel.: +49 (0) 7552 9288 -0
Fax: +49 (0) 7552 9288 -49

Diese Zeichnung darf ohne unsere ausdrückliche Genehmigung weder vervielfältigt, noch dritten Personen oder Mitbewerbern im Original oder als Kopie ausgehändigt werden. Eigentums- und Urheberrecht vorbehalten.

	date	name
User		Inzkraum
Proved		
Reading station		

Betriebsmittelverzeichnis
-

Mat. -Nr. 1000364531 Doc. -Nr. 2060093317

Revision
Ersetzt Version
Gewicht in [kg]

A3

BMK	Ort	Position	Identifier_Text	SAP_ArticleNumber
-Y106.	+FRW	/38.E5	Plug connector Solenoid valve Pressure relief 3. Control circuit	1000289268
-Y113	+EB	/54.D3	Solenoid valve Hydraulic Trailer brake	1000052097
-Y113	+EBW	/54.D3	Plug connector Solenoid valve Hydraulic Trailer brake	1000027332
-Y116	+FR	/53.D7	Solenoid valve Tipping trailer Lower	1000189585
-Y116	+FRW	/53.D7	Plug connector Solenoid valve Tipping trailer Lower	1000027332
-Y117	+FR	/52.E2	Solenoid valve Three-point linkage Raise	1000328964
-Y117	+FRW	/52.E2	Plug connector Solenoid valve Three-point linkage Raise	1000027438
-Y118	+FR	/52.D2	Solenoid valve Three-point linkage Lower	1000189585
-Y118	+FRW	/52.D2	Plug connector Solenoid valve Three-point linkage Lower	1000027438
-Y120	+FR		Solenoid valve PTO shaft	1000328964
-Y120	+FRW	/36.E5	Plug connector Solenoid valve PTO shaft	1000027438
-Y129	+FR	/52.E3	Solenoid valve Lowering mode Three-point linkage	1000189585
-Y129	+FRW	/52.E3	Plug connector Solenoid valve Lowering mode Three-point linkage	1000027332

KRAMER
Kramer Werke GmbH
Wacker Neuson Straße 1 / D- 88630 Pfullendorf
Tel.: +49 (0) 7552 9288 -0
Fax: +49 (0) 7552 9288 -49

Diese Zeichnung darf ohne unsere ausdrückliche Genehmigung weder vervielfältigt, noch dritten Personen oder Mitbewerbern im Original oder als Kopie ausgehändigt werden. Eigentums- und Urheberrecht vorbehalten.

	date	name
User		lnzkraum
Proved		
Reading station		

Betriebsmittelverzeichnis
-

Mat. -Nr. 1000364531
Doc. -Nr. 2060093317

Revision
Ersetzt Version
Gewicht in [kg]

A3

15 Heating/air conditioning

15.1 Control of heater/air-conditioning system

Overview: control of heater/air-conditioning system

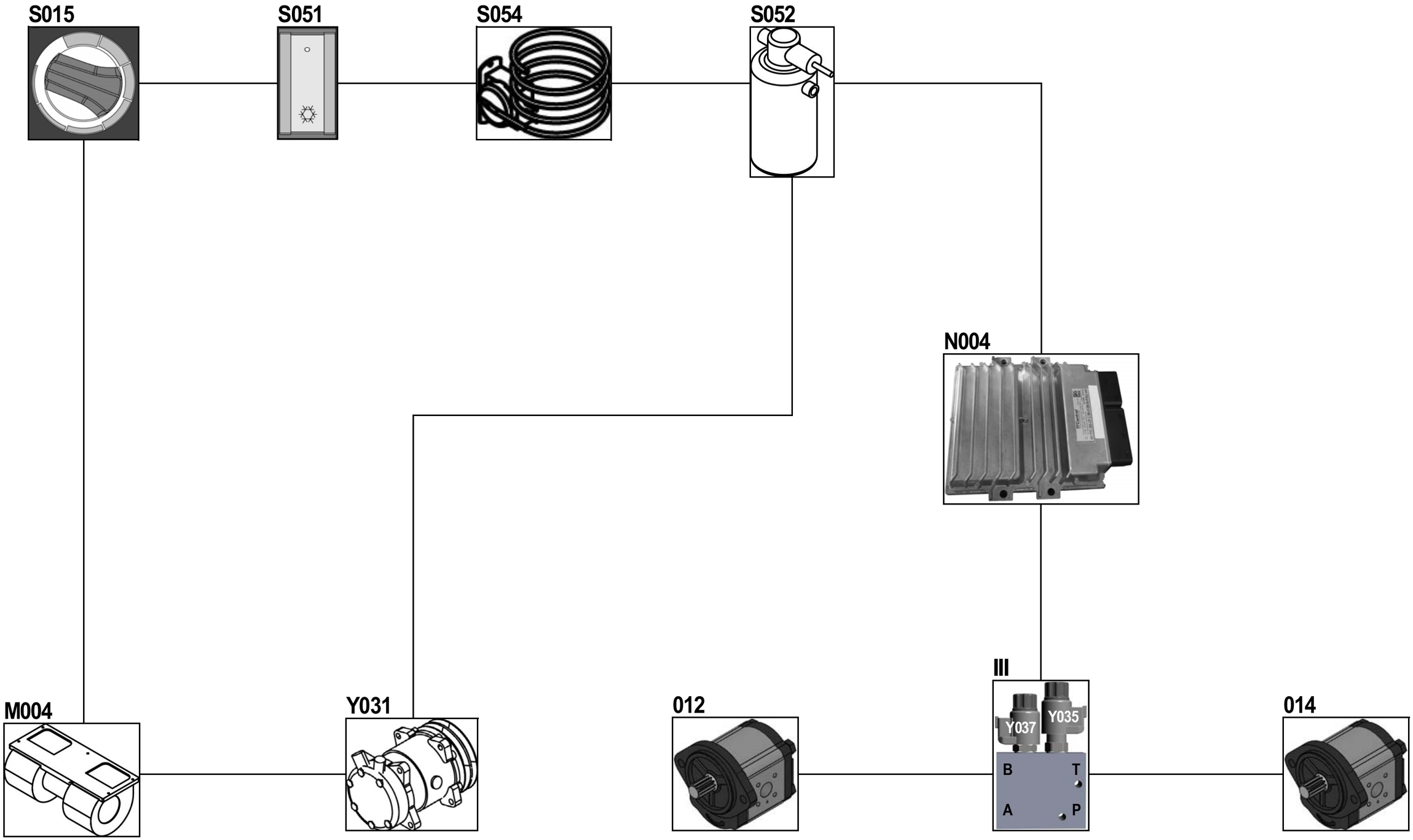

Description of control of heater/air-conditioning system

Hydraulic components

Pos.	Component	Remarks
III	Reversing valve	–
012	Gear pump (power take-off)	11 ccm/U (0.67 in^3)
014	Fan motor (reversing fan)	11 ccm/U (0.67 in^3)

Electrical components

Pos.	Component	Remarks
M004	Fan	Air flow 440-500 m^3/h (5755-654 yd^3)
S015	Rotary switch heating controls for cab heating	3 speeds
S051	Air conditioning switch	–
S052	Pressure switch for dehumidifier	Low pressure: Off at 1.2 ± 0.3 bar (17.4 ± 4.4 psi) On at max. 2.4 bar (34.8 psi). High pressure: Off at 25 ± 1.5 bar (362.6 ± 21.8 psi) On at 19 ± 2 bar (275.6 ± 29 psi)
S054	Temperature switch	–
Y031	Air conditioning compressor	Refrigerant R134a Compressor oil SP10
N004	Controller	HY-TTC 580-CP
Y035	Fan solenoid valve	PWM
Y037	Reversing fan solenoid valve	12 V

Table of measure values

Pos.	Component	Measuring range	Remarks
014	Fan motor (reversing fan)	max. fan speed 2,600–2,700 rpm	11 ccm/U (0.67 in^3)
III	Reversing valve	–	–
Y035	Fan solenoid valve	8 Ω	PWM
Y037	Reversing fan solenoid valve	8 Ω	12 V

Functional characteristics of heater/air-conditioning system

Heating

The vehicle's heating system is composed of blower system, heat exchanger, recirculated air filter and heat nozzles.

Fan

The blower system is a twin centrifugal blower. Here, the air enters the impellers axially. It is circulated radially and then discharged vertically to the suction direction. The blower has a micro-temperature fuse (MTS) which cuts off the electric circuit if the switch temperature is exceeded. This secures the blower against any possible overload. The fuse protects against the potential risk of fire in the event of a blockage.

Heat exchanger

The heat exchanger is a flat tube heat exchanger. Warm cooling liquid from the engine flows through the flat tube of the heater box. The air inside the heat exchanger is warmed by the heat of the cooling liquid. The cooled cooling liquid flows back to the engine. The driver's cab can be heated with the warm air.

Recirculated-air filter

The recirculated-air filter ensures that the air circulating inside the driver's cab is cleaned. It functions only if it is replaced regularly.

Heat nozzles

The warm air is distributed through the cabin by heat nozzles.

Air conditioning

The air conditioning system consists of a dehumidifier, evaporator, compressor and condenser.

Dehumidifier

The dehumidifier is composed of a container for liquids and a pressure switch. The liquid container is also used as an expansion tank. The dehumidifier is able to bind a small amount of water chemically. This process extracts water from the circuit. With the sight glass you can check whether the refrigerant has evaporated completely. If gas bubbles are visible in the sight glass, the refrigeration process is not functioning correctly.

Evaporator

Liquid refrigerant is converted into gaseous refrigerant in the evaporator.

Compressor

The compressor sucks the gaseous refrigerant out of the evaporator. And compresses it. Next the compressor presses the refrigerant into the condenser.

Condenser

In the condenser, the gaseous refrigerant is cooled down to boiling point. Then the refrigerant is liquified and cooled down even further.

Reversing valve III

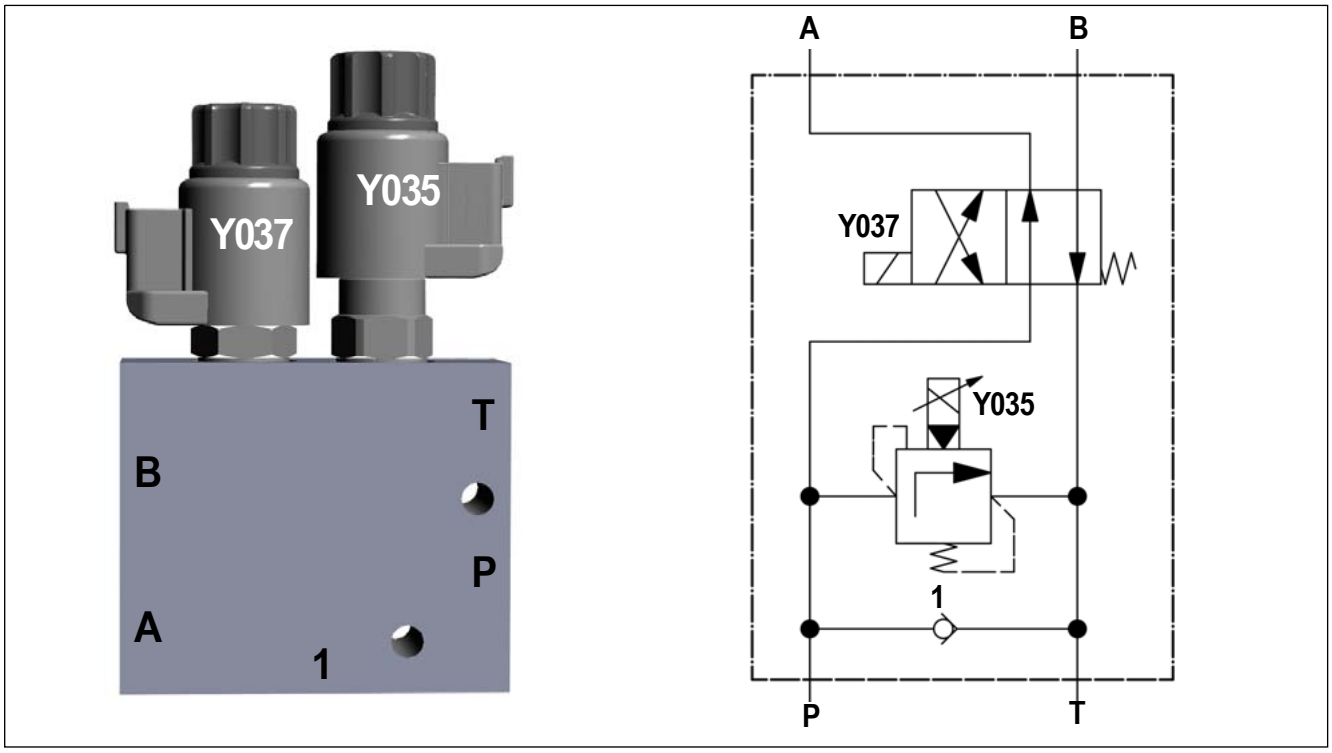

Connection	Power supply
A	Output to fan motor **014**
B	Input from fan motor **014**
P	Input from fan pump **012**
T	Output to reflux manifold block **017**

Pos.	Component	Measuring range
1	Non-return valve	–
Y035	Fan solenoid valve	8 Ω
Y037	Reversing fan solenoid valve	8 Ω

Function description

If the solenoid valve **Y035** (proportional valve) is de-energized, the oil flow is conveyed directly to the fan motor **014**, and the fan motor **014** turns at maximum speed. Oil is fed via the non-return valve **1**.

e.g. when the diesel engine is stopped and fan motor **014** comes to a stop, oil is replenished via the non-return valve **1**.

With an increasing current, the solenoid valve **Y035** (proportional valve) opens against the tank line, and the fan motor **014** turns more slowly.

With the touch button **S064** on the keypad **D004**, the solenoid valve **Y037** is energized by the controller **N004** according to a given curve.

When the air-conditioning system is switched on, the push button switch **S052** sends a signal to the controller **N004**. This decreases the energization to the solenoid valve **Y035** (proportional valve), thereby increasing the fan speed to the give value

Gear pump (auxiliary drive) 012

Component	Remarks
012	11ccm/U (0.67 in^3)

Function description

The gear pump (auxiliary drive) **012** is responsible for the oil supply of the hydraulic trailer brake and fan motor.

Fan motor 014

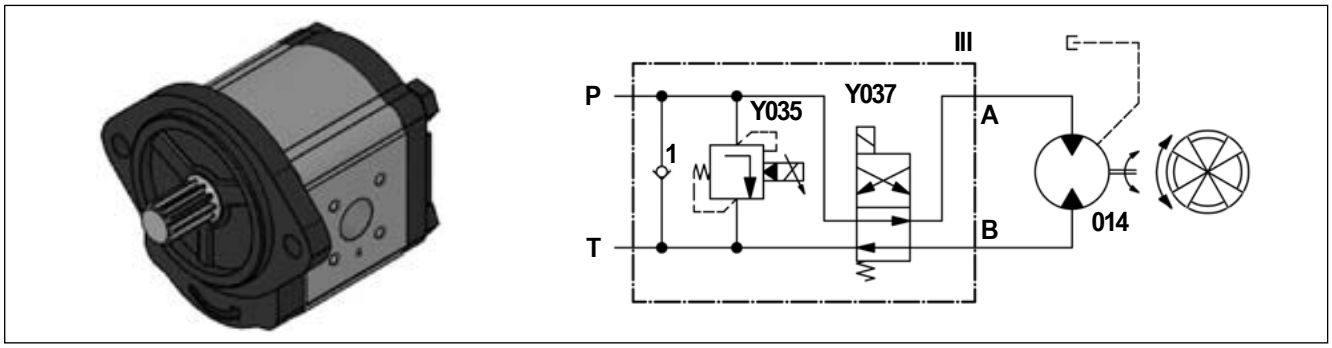

Component	Remarks
III	Reversing valve
014	11ccm/U (0.67 in^3)

Connection	Power supply
A	Output to fan motor **014**
B	Input from fan motor **014**
P	Input from fan pump **012**
T	Output to reflux manifold block**017**

Pos.	Component	Measuring range
1	Non-return valve	–
Y035	Fan solenoid valve	8 Ω
Y037	Reversing fan solenoid valve	8 Ω

Function description

The fan motor **014** is controlled via reversing valve **III**. In normal cooling mode the oil flow coming from port **P** flows to port **A**. From connection **A** the oil flow passes via fan motor **014** to connection **B** and is then conveyed into the hydraulic oil tank via connection **T** and the reflux manifold block **017**.

In reversing mode, the oil flow coming from connection **P** flows to connection **B**. From connection **B** the oil flow passes via fan motor **014** to connection **A** and is then conveyed via connection **T** and the reflux manifold block **017** into the hydraulic oil tank.

18 Name of component

18.1 Designation of electrical components

Abbreviations

These abbreviations are used on the following pages.

EID	Endpoint identifier
FMI	Failure Mode Identifier
KCN	Kramer Code Number
SPN	Suspect Parameter Number

Component list

EID	Designation
A	**(Electrical system)**
A001	Radio
A002	Engine speed regulation
B	**Sensors, signal transmitters (electrical system)**
B001	Fuel indicator
B002	Horn
B003	Reversing warning system
B004	Front axle steering sensor
B005	Rear axle steering sensor
B006	Engine temperature sensor
B007	Hydraulic oil temperature sensor
B008	Load sensor – strain gage
B009	Speed sensor
B010	Diesel engine speed
B011	Loudspeaker
B012	Loudspeaker
B013	Proximity switch
B014	Temperature sensor (engine preheating system)
B015	Coolant level sensor
B016	Fan control temperature sensor
B017	Gearbox input speed transmitter
B018	Buzzer
B019	Quickhitch buzzer
B020	Camshaft speed
B021	Charge air sensor (temperature/pressure)
B022	Rail/fuel pressure sensor
B023	Engine oil pressure sensor
B024	Fuel low pressure sensor

EID	Designation
B025	Crankshaft speed
B026	Telescopic boom sensor (extended, rear)
B027	Boom sensor (extended, centre)
B028	Position pickup for bucket repositioning
B029	Particulate filter temperature sensor
B030	Particulate filter temperature sensor
B031	Outside temperature sensor
B032	Cabin temperature sensor
B033	Air duct temperature sensor
B034	Fan control temperature sensor
B035	Pressure sensor (exhaust gas back pressure after turbocharger)
B036	Exhaust gas mass flow sensor
B037	Diesel particulate filter differential pressure
B038	DPF input temperature sensor
B039	Buzzer option
B040	Extend/retract boom scroll wheel (Hall sensor)
B041	3rd control circuit scroll wheel (Hall sensor)
B042	Forward/reverse travel scroll wheel (Hall sensor)
B051	Power brake sensor
B052	Compressed-air braking system sensor
B053	Atmospheric pressure sensor
B054	Accelerator pedal
B055	Charge-air pressure sensor
B056	Temperature sensor DOC intake temperature
B057	Intake air temperature sensor
B058	Exhaust chamber temperature sensor
B059	DPF outlet temperature sensor
B060	Control rod sensor
B061	Delta P sensor
B062	Weighing system proximity switch
B063	Weighing system proximity switch
B064	Piston base side pressure switch
B065	Piston rod side pressure switch
B066	Overload sensor
B067	Automatic engine speed setting sensor
B068	Fan speed sensor
D	**Electronics (electrical system)**
D001	Steering electronics

EID	Designation
D002	Control lever electronics
E	**Lights (electrical diagram)**
E001	Front right side marker light
E002	Rear right light
E003	Front left side marker light
E004	Rear left light
E005	High, low beam (right)
E006	High, low beam (left)
E007	Rear working light
E008	Rear working light
E009	Front working light
E010	Front working light
E011	Boom working light
E012	Chassis/telescopic boom working light
E013	Chassis/telescopic boom working light
E014	Interior light
E015	12 V power outlet
E016	Numberplate light
E017	Clearance light
E018	Clearance light
E019	Side working light
E020	Side working light
E021	Side working light
F	**Fuse (electrical system)**
F000 – F140	Fuses
G	**Supply (electrical system)**
G001	Alternator
G002	Battery
G003	Transformer
H	**Indicator lights (electrical system)**
H001	High beam indicator light
H002	Preheating indicator light
H003	Engine temperature indicator light
H004	Engine oil pressure indicator light
H005	Alternator charge function indicator light
H006	Air filter indicator light
H007	Hydraulic oil filter indicator light
H008	Hydraulic oil temperature indicator light
H009	Safe load indicator light

EID	Designation
H010	Hose burst valve indicator light
H011	3rd control circuit indicator light
H012	Differential lock indicator light
H013	Check four-wheel steering
H014	Front axle steering indicator light
H015	Synchronism indicator light
H016	Forward travel indicator light
H017	Reverse travel indicator light
H018	Check parking brake
H019	Pressure accumulator indicator light (brake)
H020	Brake lights
H021	Brake lights
H022	Machine turn indicator light
H023	Rear attachment turn indicator light
H024	Front right turn indicator
H025	Rear right turn indicator
H026	Front left turn indicator
H027	Rear left turn indicator
H028	Rotating beacon
H029	Rotating beacon
H030	Reversing light
H031	Reversing light
H032	Vario indicator light
H033	Water separator indicator light
H034	Coolant level indicator light
H035	Crab steering indicator light
H036	Hydraulic oil level indicator light
H037	Travel electronics indicator light
H038	Oscillating axle interlock indicator light
H039	Rear stabilizer leg indicator light
H040	Front stabilizer leg indicator light
H041	Right stabilizer leg indicator light
H042	Left stabilizer leg indicator light
H043	Indicator light hydraulic functions OFF (overload)
H044	Diesel engine electronics indicator light
H045	Front socket indicator light
H046	Diesel particulate filter indicator light
H047	Caution indicator light
H048	Front axle sensor indicator light

EID	Designation
H049	Rear axle sensor indicator light
H050	Boost pressure indicator light
H051	Manual throttle indicator light
H052	High-speed Vgmax indicator light (hare)
H053	Creep-gear Vgmin indicator light (snail)
H054	Indicator light (4 wheel drive switched on)
H055	Indicator light (front axle drive switched on)
H056	Indicator light (SCR lamp ash accumulation)
H057	Charge-air temperature indicator light
H058	Engine operation indicator light
H059	Maintenance display
H060	Indicator light (3rd control circuit switched over)
H061	Confirmation indicator light
H062	Indicator light (tipping trailer/Auto-Hitch volume setting)
H063	Indicator light (volume setting of front additional control circuit)
H064	Indicator light (volume setting of rear additional control circuit)
H065	Indicator light (volume setting of continuous operation of 3rd control circuit)
H066	Indicator light (volume setting of 3rd control circuit joystick)
H067	Fuel consumption indicator light
H068	Error indicator light
H069	Regeneration indicator light
H070	Inside cabin pressure indicator light
H071	Bucket mode indicator light
H072	Fork-lift mode indicator light
H073	Crane mode indicator light
H074	Tortoise indicator light
H075	Vertical lift indicator light
H076	Combined front left light
H077	Combined front right light
H078	Combined rear left light
H079	Combined rear right light
H080	Indicator light (red)
H081	Indicator light (yellow)
H082	Indicator light (green)
J	**(Electrical system)**

EID	Designation
J000	Jumper
K	**Relays (electrical system)**
K001	High-current relay
K002	High-current relay
K003	Reverse machine travel switching relay
K004	Forward machine travel switching relay
K005	High current relay, preheating
K006	Preheating time lag relay
K007	Start high-current relay
K008	Time lag relay 1s cut-off solenoid
K009	Cut-off solenoid switching relay
K010	Turn indicator relay
K011	Air conditioning switching relay
K012	Condenser switching relay
K013	Condenser switching relay (1st/2nd speed)
K014	Vario time-lag relay
K015	Vario switching relay
K016	Front power outlet switching relay
K017	Switching relay (unlock)
K018	Switching relay (lock)
K019	Switching relay – extend telescopic boom
K020	Switching relay, retract boom
K021	Switching relay, differential lock
K022	Switching relay, load stabiliser
K023	Switching relay – wiper (1st speed)
K024	Switching relay, wiper (2nd speed)
K025	Intermittent-wipe relay
K026	Step-by-step relay
K027	Time lag relay 5 min
K028	Bucket repositioning switching relay
K029	Diesel engine valves switching relay
K030	Brake lights switching relay
K031	Fuel preheater switching relay
K032	Reversing fan switching relay
K033	Rear window heating high current relay
K034	Switching relay for overload cut-off
K035	Switching relay for overload cut-off
K036	Machine travel signals switching relay
K037	Machine travel signals switching relay

EID	Designation
K038	Options switching relay
K039	Preheating indicator light switching relay
K040	Steering sensor relay
K041	Road travel relay
K042	Engine electronics switching relay
K043	Switching relay (joystick signal changeover)
K044	Switching relay (joystick signal changeover)
K045	Additional function switching relay
K046	Additional function switching relay
K047	Working light switching relay
K048	Working light switching relay
K049	Working light switching relay
K050	Working light switching relay
K051	Time-lag relay (automatic engine speed setting)
K052	Mini SPC switching relay
K053	Fan switching relay
K054	Hose burst valve switching relay
K055	Brake lights switching relay
K056	Switching relay, load stabiliser
K057	Compressed air braking system switching relay
K058	1st/2nd speed switching relay
K059	Manual throttle switching relay
K060	Manual throttle switching relay
K061	Start interlock switching relay
K062	Low beam switching relay
K063	High beam switching relay
K064	Time lag relay 5 min (immobilizer)
K065	Time lag relay 5 min (immobilizer)
K066	Immobilizer switching relay
K067	Immobilizer switching relay
K068	Switching relay for overload cut-off
K069	Switching relay for overload cut-off
K070	Switching relay (diesel engine runs) (D+)
K071	Coolant level switching relay
K072	Auxiliary heating switching relay (night heater)
K073	Switching relay for operator presence switch 5 s
K074	3rd control circuit release
K075	Continuous operation of 3rd control circuit
K076	High-current relay

EID	Designation
K077	Manual throttle switching relay
K078	Switching relay, differential lock
K079	Tilt cylinder lock switching relay
K080	Switching relay for overload cut-off
K081	Switching relay for overload cut-off
K082	Switching relay for lowering throttle valve
K083	End position switching relay
K084	End position switching relay
K085	Angle detection switching relay
K086	PreSafe switching relay
K087	Time-lag relay (general)
K088	Fuel pump switching relay
K089	DPF pump switching relay
K090	DPF glow plug switching relay
K091	Parking brake switching relay
K092	Rear wiper switching relay
K093	Side wiper switching relay
K094	Switching relay for power supply of weighing system
K099	Switching relay for switch position II
K103	Air-conditioning compressor switching relay
K104	Switching relay for operator presence switch
K105	Parking brake switching relay
K106	Start repeat interlock switching relay
M	**Drives (electrical system)**
M001	Starter
M002	Front wiper motor
M003	Rear wiper motor
M004	Fan
M005	Front wipe/wash pump
M006	Rear wipe/wash pump
M007	Fuel-filling pump
M008	Engine speed regulation
M009	Fuel pump
M010	Air-suspension seat
M011	Mirror adjustment motor
M012	Electric compressor (reversing fan)
M013	Fan
M014	Auxiliary heater
M015	Side wiper motor

EID	Designation
M016	Central lubrication system
M017	DPF air compressor
N	**Electronics (electrical system)**
N001	Traction electronics
N002	Proportional electronics
N003	Preheating time control unit
N004	Operating hydraulics electronics
N005	Diesel engine electronics
N006	Electronics speed range
N007	Particulate filter electronics
N008	Automatic air conditioning
N009	Fan speed regulation
N010	Fan electronics
N011	CAN analogue adapter
N012	Electronics for fuel-filling pump
N013	Safe load indicator electronics
N014	Frame electronics
N015	Cabin electronics
N016	Option electronics
N017	Electronics 9 m option
N018	Telematic module
P	**Instruments (electrical system)**
P001	Hour meter
P002	Fuel level indication
P003	Temperature readout for engine oil
P004	Hydraulic oil temperature gauge
P005	Speedometer
P006	Safe load indicator
P007	Tachometer
P008	Particulate filter indicating instrument
P009	Auxiliary heating indicating instrument
P010	Compressed-air gage (compressed-air braking system)
P011	Indicating instrument (display) for additional machine information
P012	Power brake pressure indicator
P013	Clock
P014	Combined indicating instrument
P015	DPF interface

EID	Designation
R	**Resistors (electrical system)**
R001	Glow plug
R002	Inching pedal
R003	Creep gear potentiometer
R004	Pump control potentiometer
R005	Pull up resistor
R006	Window heating
R007	Accelerator pedal potentiometer
R008	2nd glow plug
R009	Fuel preheater
R010	Mirror heating
R011	Accelerator pedal
R012	Manual throttle
R013	Tilt in/out potentiometer
R014	Raise/lower potentiometer
R015	Potentiometer (raise/lower right stabilizer leg)
R016	Potentiometer (raise/lower left stabilizer leg)
R017	Bus terminating resistance
R018	Bus terminating resistance
R019	Potentiometer (oil quantity for additional control circuit)
R020	Resistor for hydraulic motor speed sensor
R021	Pull up resistor
R022	Mirror heating
R023	Potentiometer lifting arm monitoring
R024	Resistor
R025	Resistor
R026	Bus terminating resistance
R027	Bus terminating resistance
R028	Potentiometer for auxiliary hydraulics (joystick rocker switch)
R029	Potentiometer for 3rd control circuit (joystick rocker switch)
R030	Potentiometer (retract/extend potentiometer)
R031	DPF glow plug
R032	Heated seat
R033	Bus terminating resistance
R034	Bus terminating resistance
R035	120 Ω resistor
R810 – R829	Bus terminating resistance

EID	Designation
R830 – R849	82 Ω
R850 – R869	120 Ω
R870 – R889	240 Ω
R890 – R909	1 kΩ
R910 – R929	1.5 kΩ
R930– R949	3.6 kΩ
R950 – R969	18 Ω
S	**Switches (electrical system)**
S001	Preheating start switch
S002	Engine oil pressure switch
S003	Diesel engine temperature switch
S004	Pressure switch, air filter
S005	Pressure switch, hydraulic oil
S006	Temperature switch, hydraulic oil
S007	Hydraulic oil level switch
S008	Battery master switch
S009	Brake light switch
S010	Brake pressure accumulator switch
S011	Handbrake switch
S012	Steering-column control lever (left)
S013	Steering-column control lever (right)
S014	Light switch
S015	Heating switch
S016	Working light switch
S017	Working light switch
S018	Rotating beacon switch
S019	Hazard lights switch
S020	Wiper/washer switch
S021	1st/2nd gear switch
S022	Steering mode / high-speed switch
S023	Synchronism push button
S024	Oscillating axle interlock switch
S025	Differential lock push button
S026	Increased pump output switch
S027	Front socket/changeover switch
S028	Safety switch (left)
S029	Armrest safety switch
S030	“Unlock” push button
S031	“Lock” push button

EID	Designation
S032	Function switch, 3rd control circuit
S033	Continuous operation of 3rd control circuit
S034	Forward driving push button
S035	Reverse driving push button
S038	Extend telescopic boom/front socket
S039	Retract boom/bucket repositioning
S040	Quickhitch lock push button
S041	Safe load indicator pressure switch
S042	Safe load indicator switch
S043	Backup warning signal pressure switch
S044	Load stabilizer switch
S045	Load stabiliser pressure switch
S046	Bucket repositioning pressure switch
S047	Tilt cylinder lock key-operated switch
S050	Air-conditioning fan switch
S051	Switch, air conditioning
S052	Air conditioning pressure switch
S053	Air conditioning pressure switch
S054	Air conditioning temperature switch
S055	Horn push button
S056	Switch, additional control circuit
S057	Switch, additional control circuit
S058	Water separator switch
S059	Rear window heating push button
S060	Telescopic boom working light switch
S061	Fuel preheater switch
S062	Mirror adjustment switch
S063	Float position/hose burst valve switch
S064	Reversing fan
S065	Parking brake switch
S066	Neutral push button
S067	Bucket repositioning/front socket push button
S068	Auto-Hitch/tipping trailer changeover switch
S069	Additional control circuit I-0-II switch
S070	Raise/lower tipping trailer I-0-II push button
S071	Auto-Hitch unlock push button
S072	Frame leveling switch
S073	Crab steering switch
S074	Fuel preheater temperature switch

EID	Designation
S075	Rear/front stabilizer leg switch
S076	Front stabilizer leg switch
S077	Rear stabilizer leg switch
S078	Travel pressure switch
S079	Changeover switch to 3rd boom segment
S083	Creep gear potentiometer switch
S084	Switch for cut-off of hydraulic functions
S085	Switch for joystick cutoff during road travel (lock for long-haul travel)
S086	Error code call push button
S087	Door contact switch
S088	Mirror heating switch
S091	Central lubrication system push button
S092	Option switch/push button
S096	Boost pressure switch
S097	Manual throttle switch
S098	Quickhitch pressure switch
S099	Changeover switch for rear hydraulic connection/3-point mount
S101	Control lever push button for additional function
S102	Plunger switch
S103	Plunger switch
S104	Operator presence switch
S105	Clutch pedal switch
S106	Hydraulic oil temperature switch (radiator)
S107	Diesel engine temperature switch
S108	Charge air pressure switch
S109	Push button for electrical connection 1 on control lever
S110	Push button for electrical connection 2 on control lever
S111	Switch for loader unit lock
S112	Switch for loader unit stabiliser
S113	Switch for electrical connection
S114	Differential lock axle probe
S115	Differential lock axle probe
S116	Limit switch 1 (telescopic boom fully retracted)
S117	Control lever push button for additional function
S119	Activation of diesel particulate filter regeneration (DPF)
S120	Switch/push button Eco mode
S121	Boom switch (extended, centre)

EID	Designation
S122	Pressure switch (extend/retract telescopic boom)
S123	Seat belt contact switch
S124	Switch/push button/limit switch for start repeat interlock (starting interlock)
S125	Switch for vertical lowering
S126	Rear wiper switch
S127	Pressure relief switch
S128	Switch for option
S129	Switch for option
S130	Switch/push button (4 wheel drive OFF/axle cut-off)
S131	Raise/lower Auto-Hitch I-0-II push button
S132	Display changeover push button
S133	Side working light switch
S134	Limit switch (gearbox shift position)
S135	Speed/mode reduction push button
S136	Speed/mode increase push button
S137	Push button (Auto-Hitch raised)
S138	Auto-Hitch LOCK push button
S139	Switch for option
S140	Switch raise/lower 3-point mount
S141	VLS mode switch (changeover of vertical lift function)
S142	Limit switch 2 (boom fully retracted)
S143	PTO shaft ON/OFF switch
S144	Switch for stabilizer blade swiveling
S145	Push button for engine speed SET/RESET
S146	Gearbox shift position
S147	Travel speed control
S148	Pressure relief
U	**Amplifier (electrical system)**
U001	Coolant level amplifier
V	**Diodes (electrical system)**
V000–V100	Diodes
W	**Antenna (electrical system)**
W001	Radio aerials
X	**Connectors (electrical system)**
X000 – X050	General connector
XP00 – XP50	Board connector
XL00 – XL15	Steering-column control lever connector
XA00 – XA15	Indicating instrument connector

EID	Designation
XE00 – XE20	Electronics connector
XM00 – XM15	Diesel engine – control unit connector
XS00 – XS15	Armrest (control lever base) disconnect connector
XR00 – XR15	Cabin/chassis disconnect connector
XJ00 – XJ15	Joystick (control lever) connector
XD00 – XD15	Cabin/roof disconnect connector
XX00 – XX15	Sockets
Y	**Solenoids (electrical system)**
Y001	Cut-off solenoid/release
Y002	Proportional valve, capacity
Y003	Normal speed solenoid valve
Y004	Reverse machine travel solenoid valve
Y005	Forward machine travel solenoid valve
Y006	Front axle steering solenoid valve
Y007	4 wheel steering solenoid valve
Y008	Oscillating axle interlock solenoid valve
Y009	Solenoid valve, differential lock
Y010	Travel direction identification solenoid valve
Y011	Increased pump output solenoid valve
Y012	Increased pump output solenoid valve
Y013	Joystick OFF pilot control safety valve
Y016	“Lock” solenoid valve
Y017	“Unlock” solenoid valve
Y020	Load stabiliser solenoid valve
Y021	Load stabiliser solenoid valve
Y022	Hose burst valve solenoid
Y023	Solenoid valve (retract telescopic boom)
Y024	Solenoid valve (extend telescopic boom)
Y025	Quickhitch lock solenoid valve
Y026	Tilt cylinder lock solenoid valve
Y027	Tilt cylinder lock solenoid valve
Y028	Bucket repositioning solenoid valve
Y029	Floating position magnet
Y030	Multiple quantity valve (cold start)
Y031	Magnetic clutch (compressor)
Y032	Floating position magnet
Y033	Additional control circuit solenoid valve
Y034	Additional control circuit solenoid valve
Y035	Fan solenoid valve

EID	Designation
Y036	Crab steering solenoid valve
Y037	Reversing fan solenoid valve
Y038	1st speed range solenoid valve
Y039	2nd speed range solenoid valve
Y040	4 wheel steering solenoid valve 2
Y041	Solenoid valve for overload cut-off
Y042	Solenoid valve for overload cut-off
Y043	Parking brake solenoid valve
Y044	Raise tipping trailer solenoid valve
Y045	Lower tipping trailer solenoid valve
Y046	Auto-Hitch/tipping trailer changeover solenoid valve
Y047	Auto-Hitch unlock solenoid valve
Y048	Emergency lowering OFF solenoid valve
Y049	Parking brake signal compressed-air brake solenoid valve
Y050	Compressed-air brake lead solenoid valve
Y051	Solenoid valve for changeover of front 4th control circuit (lock/unlock)
Y052	Solenoid valve for frame leveling, extend cylinder
Y053	Solenoid valve for frame leveling, retract cylinder
Y054	Oscillating axle interlock solenoid valve
Y059	Solenoid valve (diesel engine speed control)
Y060	Fuel injector
Y061	Fuel injector
Y062	Fuel injector
Y063	Fuel injector
Y064	Solenoid valve (extend 3rd boom segment)
Y065	Solenoid valve (retract 3rd boom segment)
Y066	Raise arm solenoid valve
Y067	Lower arm solenoid valve
Y068	Solenoid valve (tilt in)
Y069	Solenoid valve (tilt out)
Y070	Steering direction
Y076	Rail pressure feed solenoid valve
Y078	Exhaust gas recirculation solenoid valve
Y080	Solenoid valve for additional control circuit with additional function
Y081	Solenoid valve for additional control circuit with additional function
Y082	Heating water valve

EID	Designation
Y083	Solenoid valve (4th control circuit, proportional)
Y084	Solenoid valve (4th control circuit, proportional)
Y085	Solenoid
Y086	Solenoid valve (reverse High Flow)
Y088	Travel direction identification solenoid valve (auxiliary motor)
Y089	Swivel angle adjustment solenoid valve (operating hydraulics)
Y090	Flow rate restriction solenoid valve (operating hydraulics)
Y091	Solenoid valve (4 wheel drive switched ON)
Y092	Solenoid valve (front axle drive switched ON)
Y093	Brake valve
Y094	Solenoid valve (loader unit interlock 1)
Y095	Solenoid valve (boom interlock 2)
Y097	Intake air throttle valve
Y098	Solenoid valve (hydraulic motor setting)
Y099	Solenoid valve (operating hydraulics derate)
Y100	Solenoid valve for throttling boom lowering
Y106	Solenoid valve (pressure relief)
Y109	Travel direction identification solenoid valve
Y112	Solenoid valve (PCOR valve)
Y113	Solenoid valve (hydraulic trailer brake)
Y114	Diesel engine limitation solenoid
Y115	Solenoid valve (hydraulic trailer brake)
Y116	Solenoid valve for lowering tipping trailer (black/white)

19 Installation position

19.1 Hydraulic system installation position

EID	Description	Page
001.1	Gear pump working hydraulics	19-3
III	Reversing valve	19-3
IV	Steering orbitrol	19-4
VII	Travelling drive variable displacement pump	19-4
VIII	Travelling drive variable displacement motor	19-5
XIII	Main control unit (work hydraulics)	19-5
XIV	Hose burst valve with load stabiliser	19-6
XX	Hydraulic oil reservoir	19-6
XXVI	Steering mode valve	19-7
008	Priority valve	19-7
012	Gear pump of auxiliary drive (fan pump)	19-8
014	Fan motor (reversing fan)	19-8
018	Front axle steering cylinder	19-9
019	Rear axle steering cylinder	19-9
026	Hydraulic oil return filter	19-6
027	Oil cooler hydraulic oil	19-10
028	Hydraulic oil reservoir breather filter	19-6
030	Master brake cylinder	19-10
077	Emergency lowering pressure accumulator	19-11
080	Pressure accumulator	19-11
082	Load safety valve with hose burst valves, tipping/ compensating cylinder	19-12
088	Hose burst valve for tilt ram	19-12
090	Hose burst valve for push-out ram	19-13
091	Locking cylinder quick change plate	19-13
092	Autohitch ram	19-14
093	Autohitch locking cylinder	19-14
112	Load stabilizer (Y020)	19-15
113	Load stabilizer (Y021)	19-15
117	Solenoid valve for quick hitch lock (Y025)	19-16
122	Solenoid valve for reversing fan (Y035, Y037)	19-16
128	Reversing valve for tipper/hitch (Y046)	19-17
129	Solenoid valve for unlocking auto hitch (Y047)	19-20

EID	Description	Page
133	Reversing valve fourth service in front (Y051)	19-17
134	Pressure release valve third control circuit (Y106)	19-18
140	Trailer brake valve (France)	19-18
143	Lower relief valve for tipper (Y116)	19-19
144	Relief valve for load stabiliser (Y020)	19-19
159	Solenoid valve for hydraulic trailer brake (Y113)	19-20
161	Brake calliper, rear axle	19-19
162	Advance hydraulic trailer brake (Y159)/unlock auto hitch (Y129)	19-20
167	High pressure filter	19-21
169	Solenoid valve for differential lock (Y009)	19-22

Gear pump working hydraulics 001.1

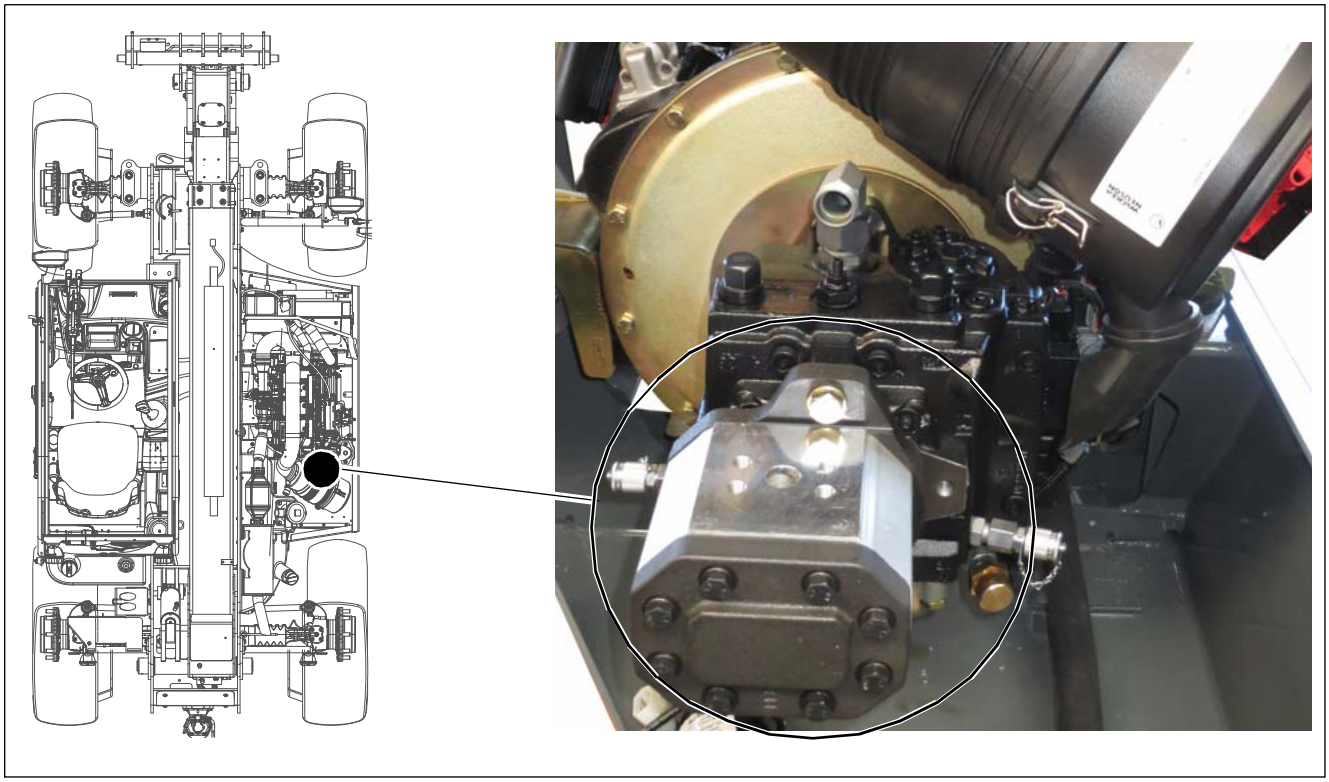

Reversing valve III

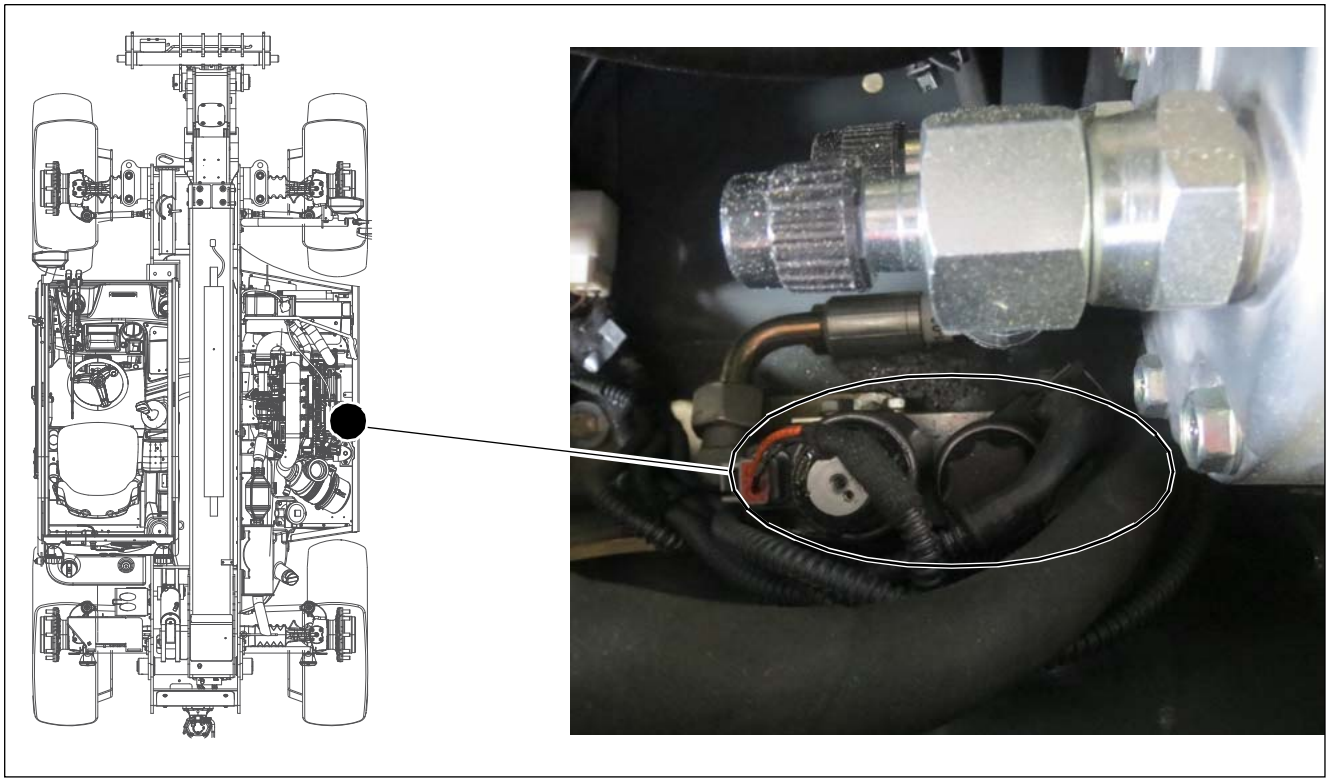

Steering orbitrol IV

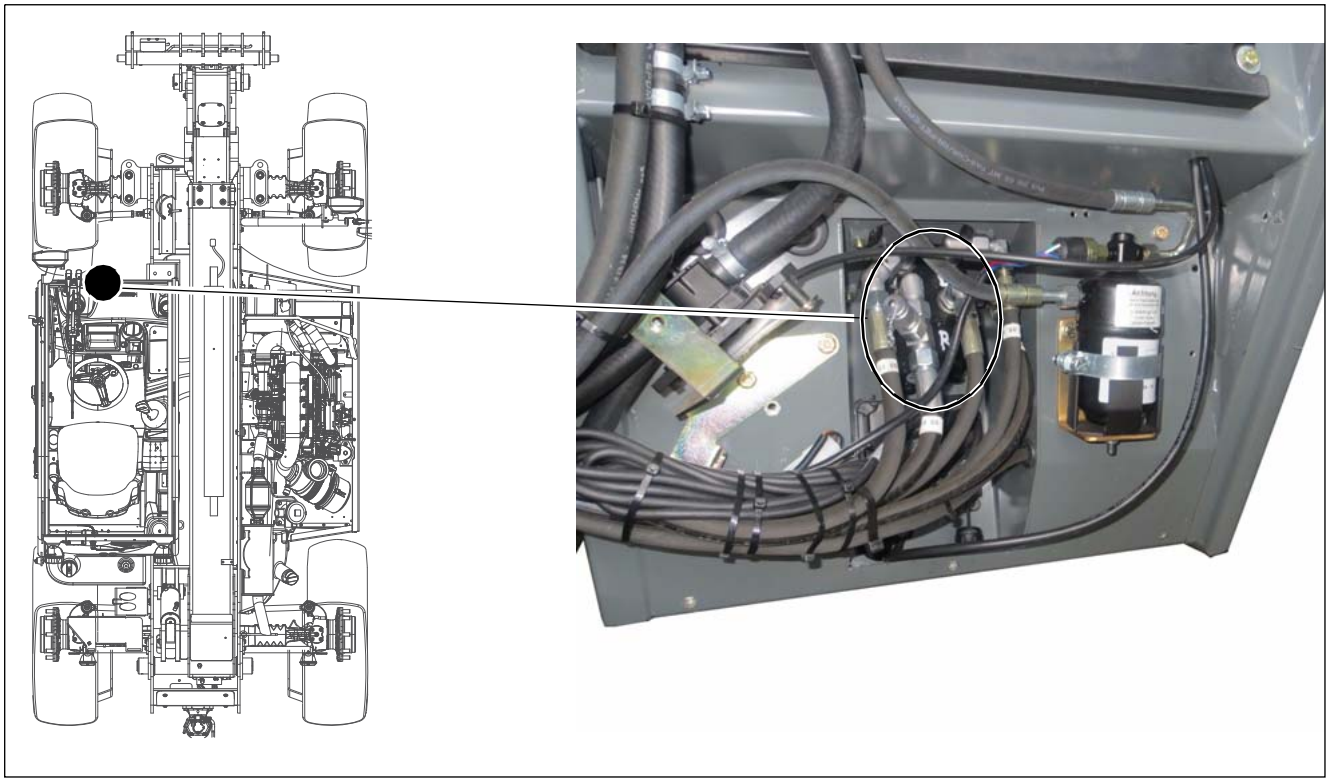

Travelling drive variable displacement pump VII

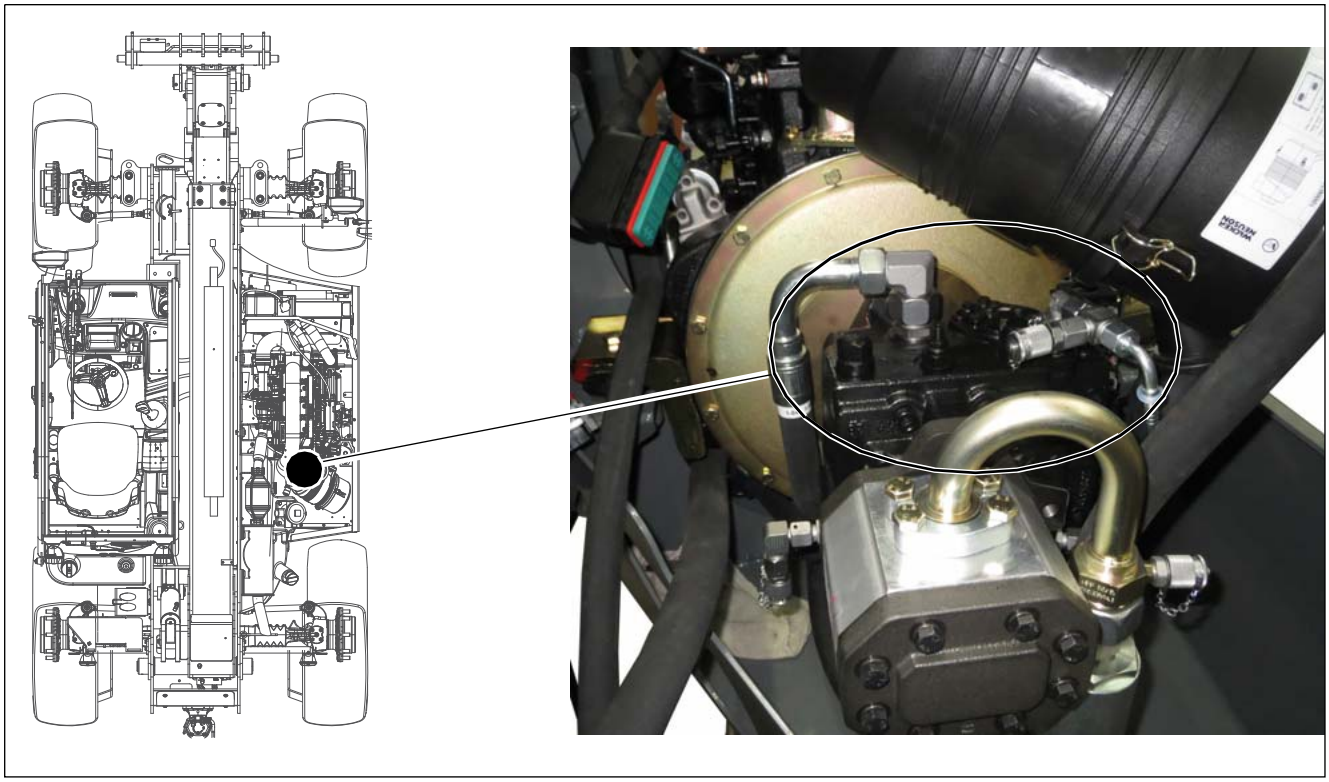

Travelling drive variable displacement motor VIII

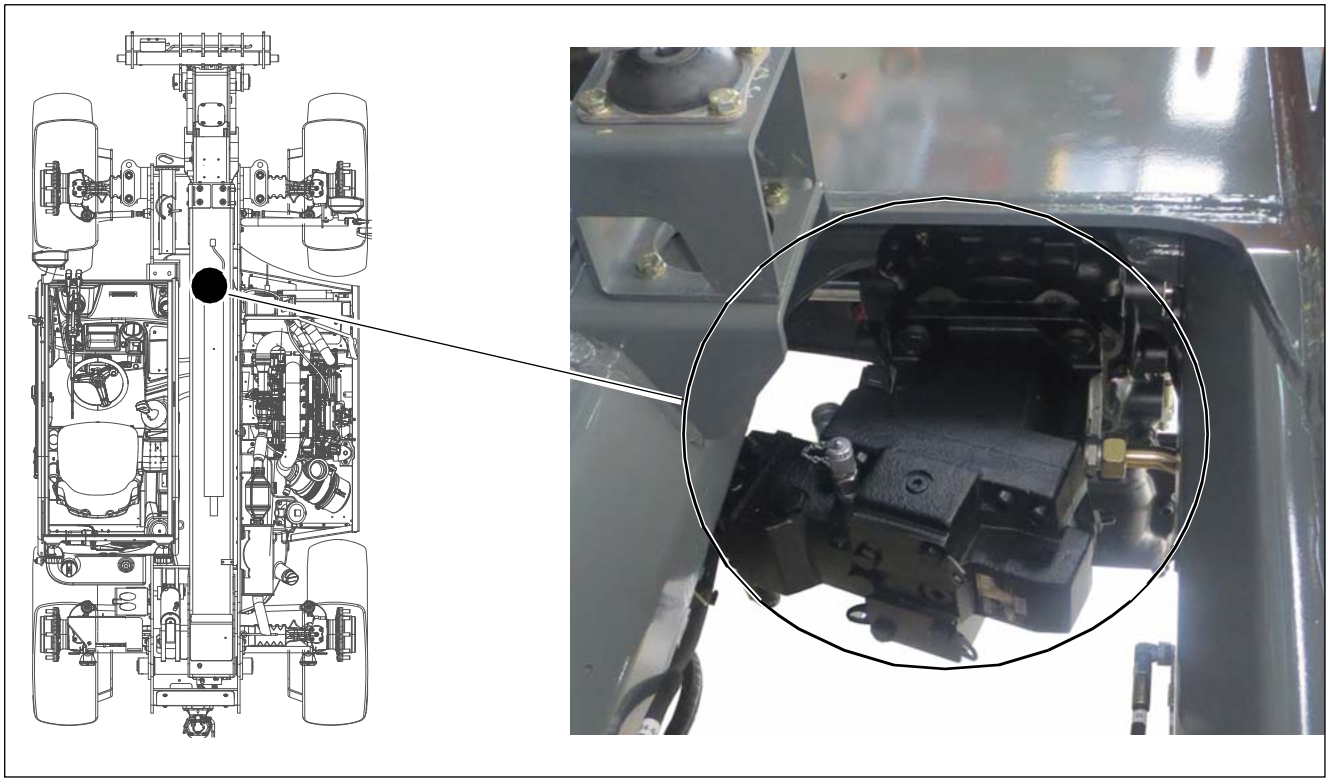

Main control unit (work hydraulics) XIII

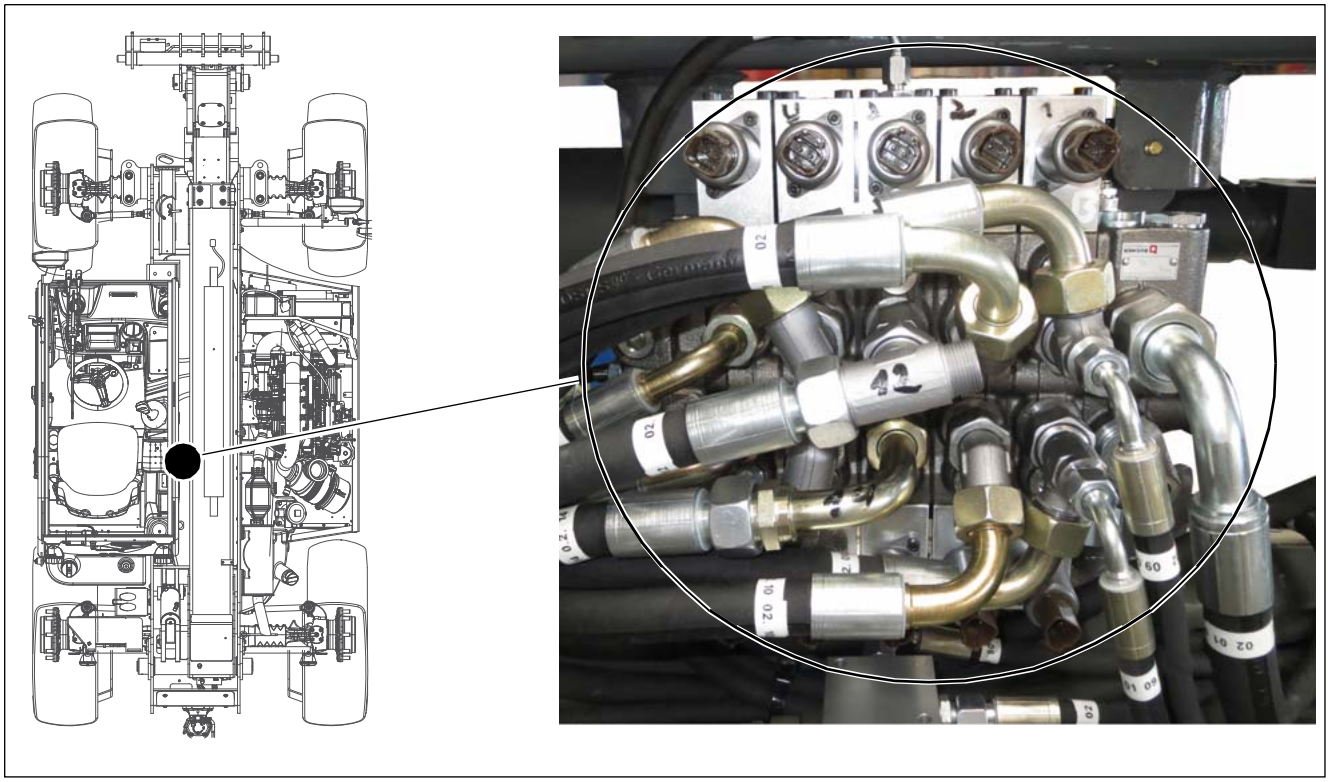

Hose burst valve with load stabiliser XIV

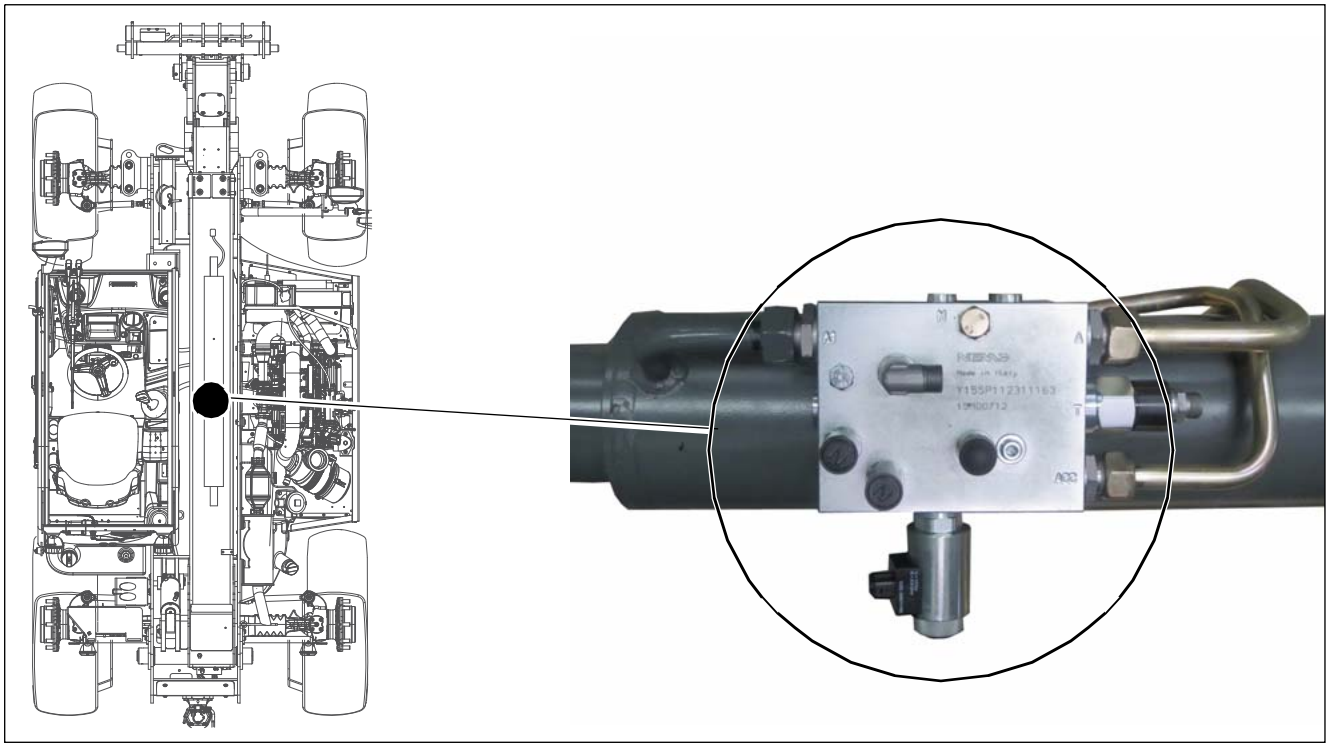

Hydraulic oil reservoir XX

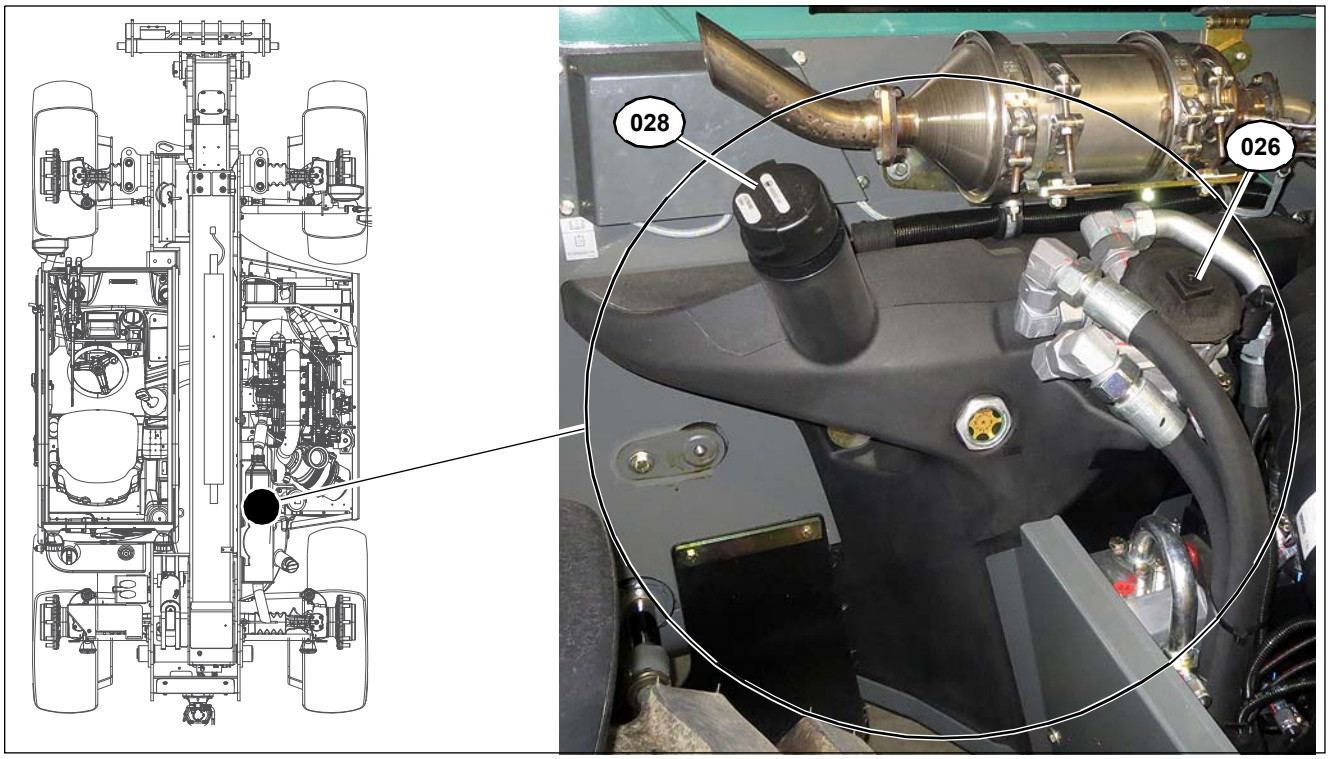

EID	Designation
026	Hydraulic oil return filter
028	Hydraulic oil reservoir breather filter

Steering mode valve XXVI

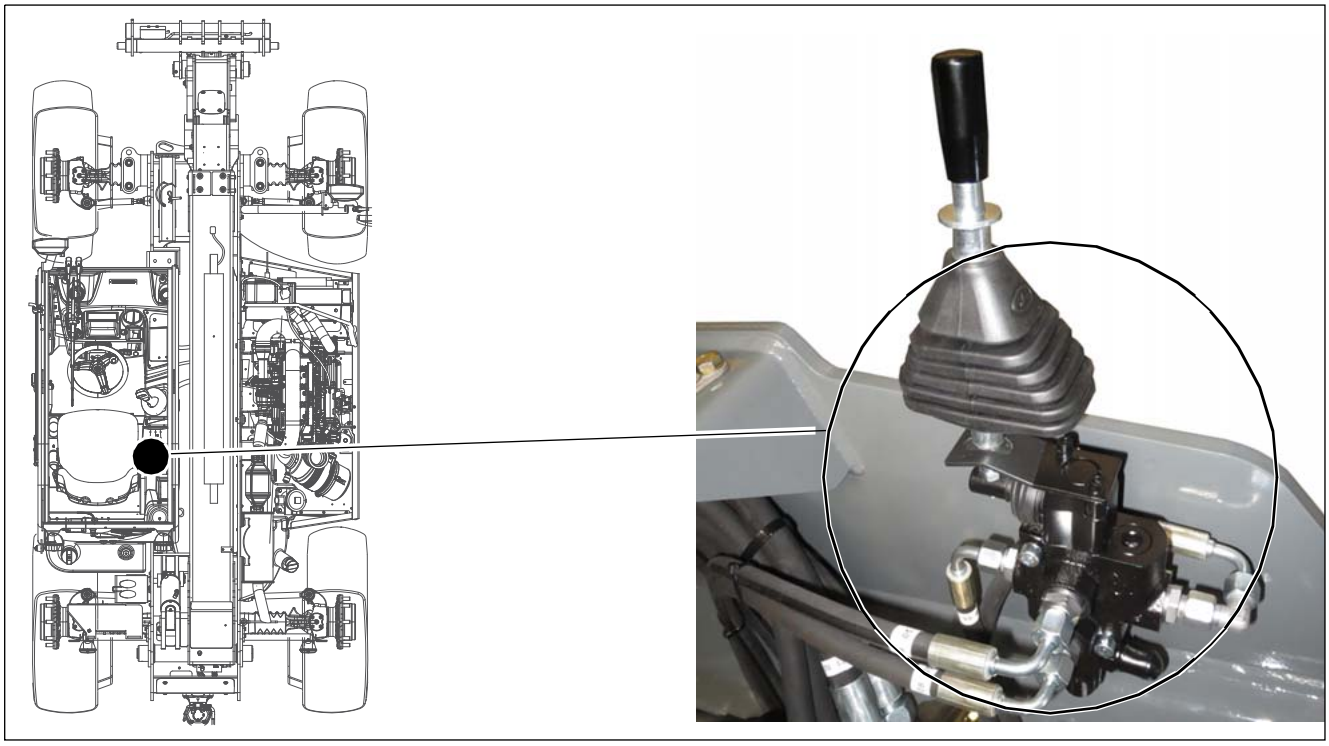

Priority valve 008

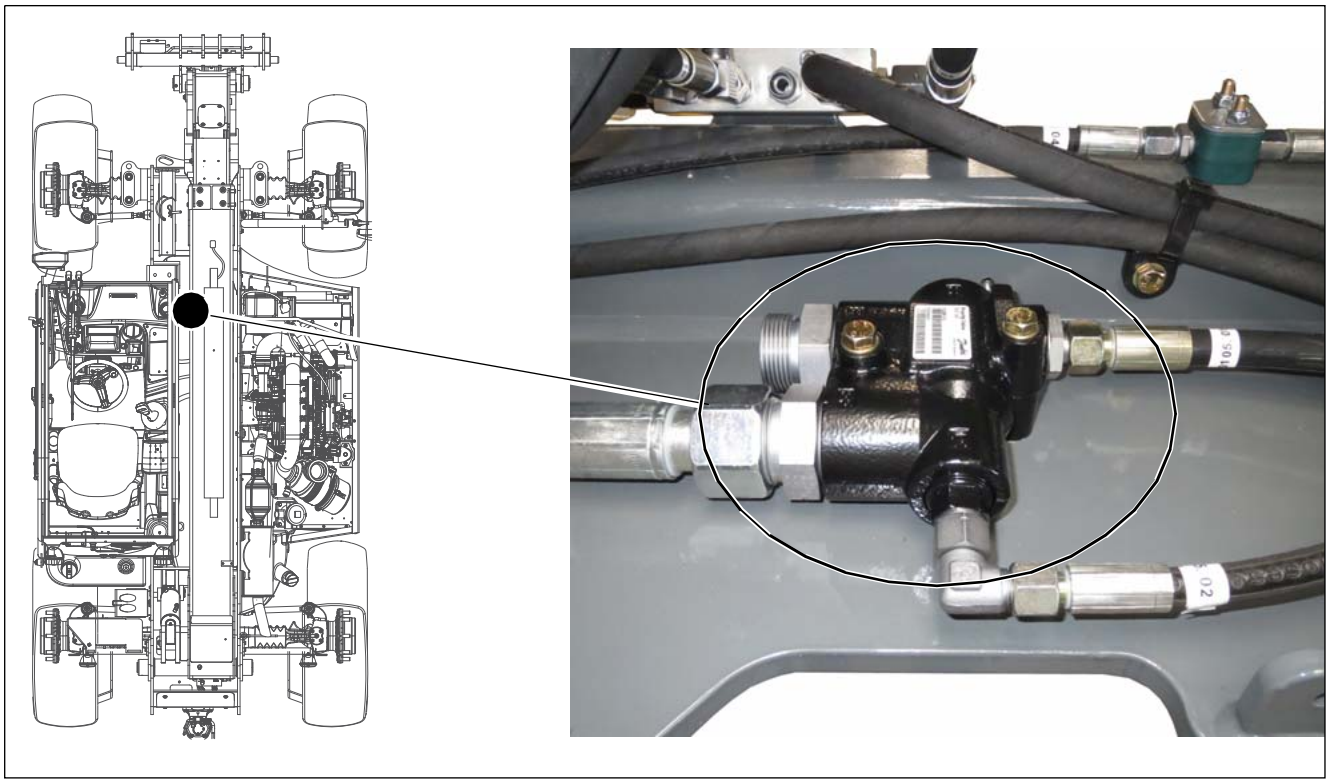

Gear pump of auxiliary drive (fan pump) 012

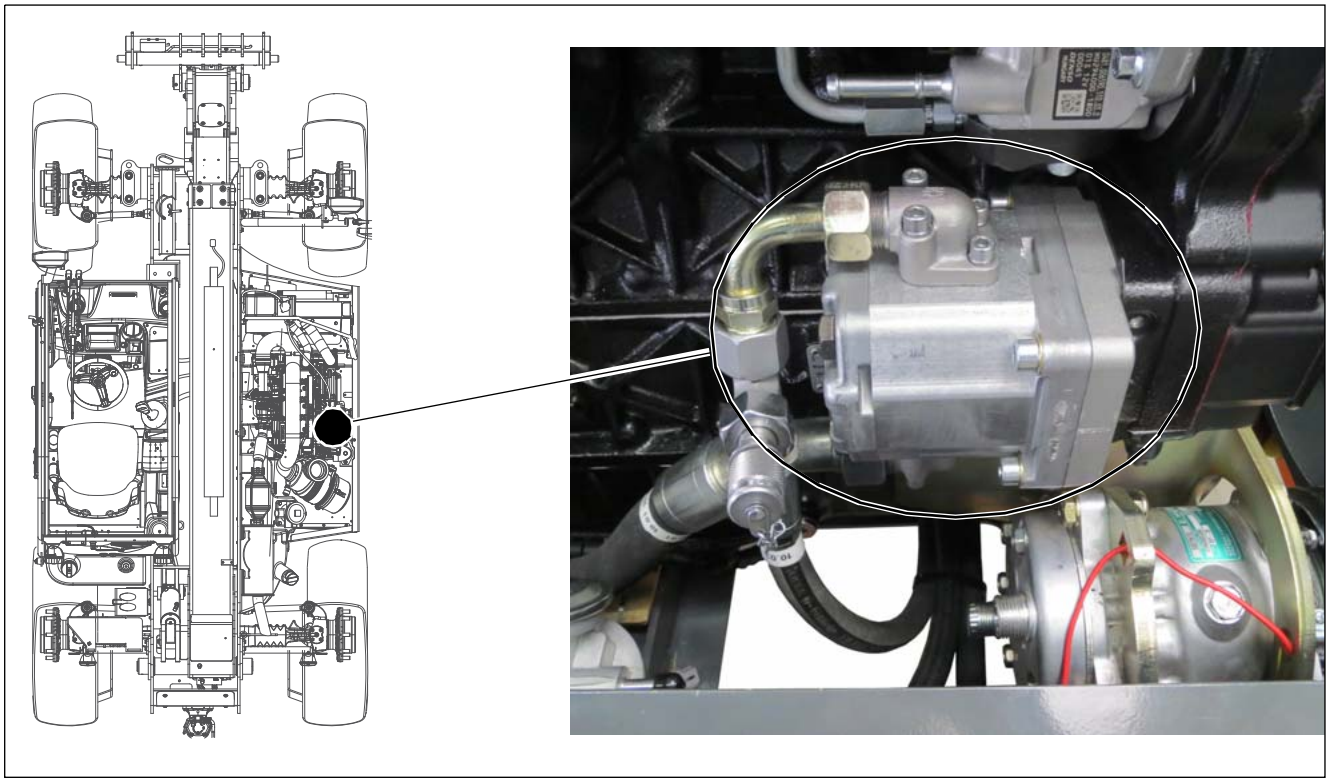

Fan motor (reversing fan) 014

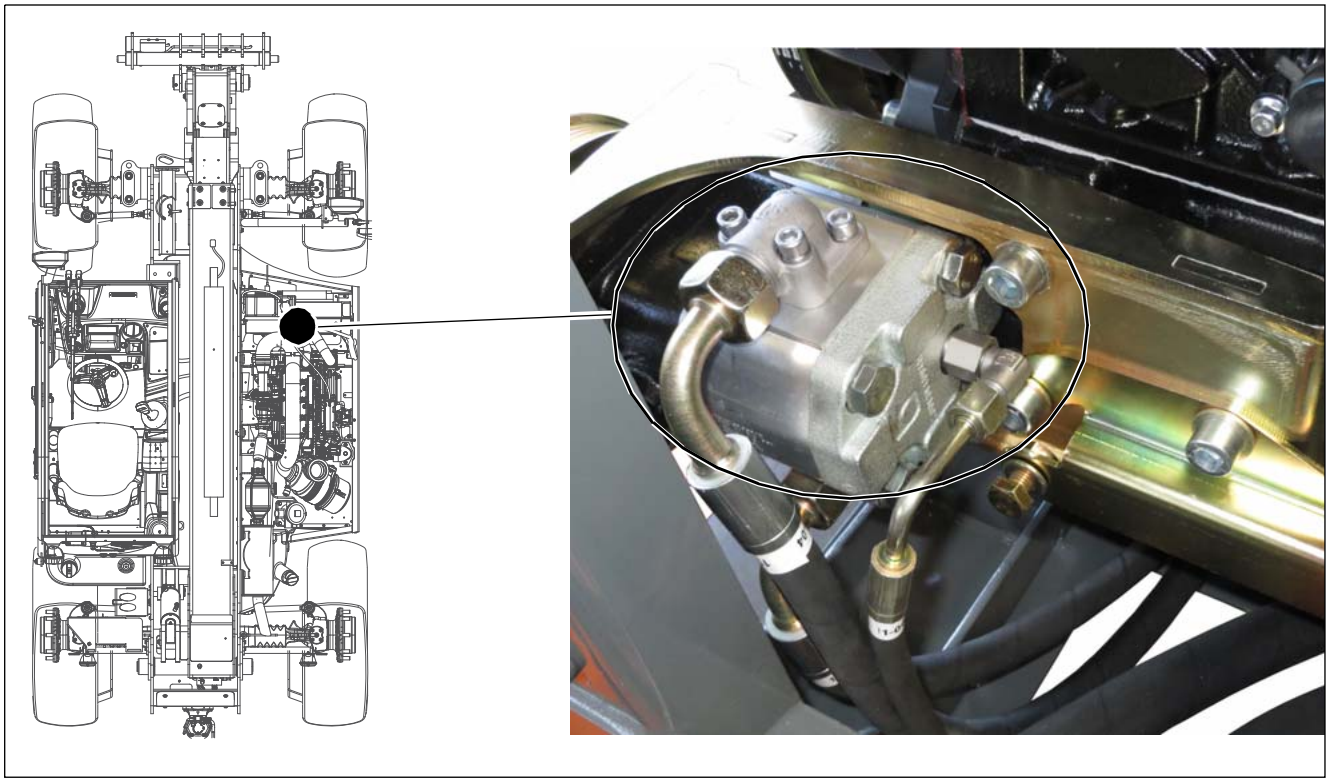

Front axle steering cylinder 018

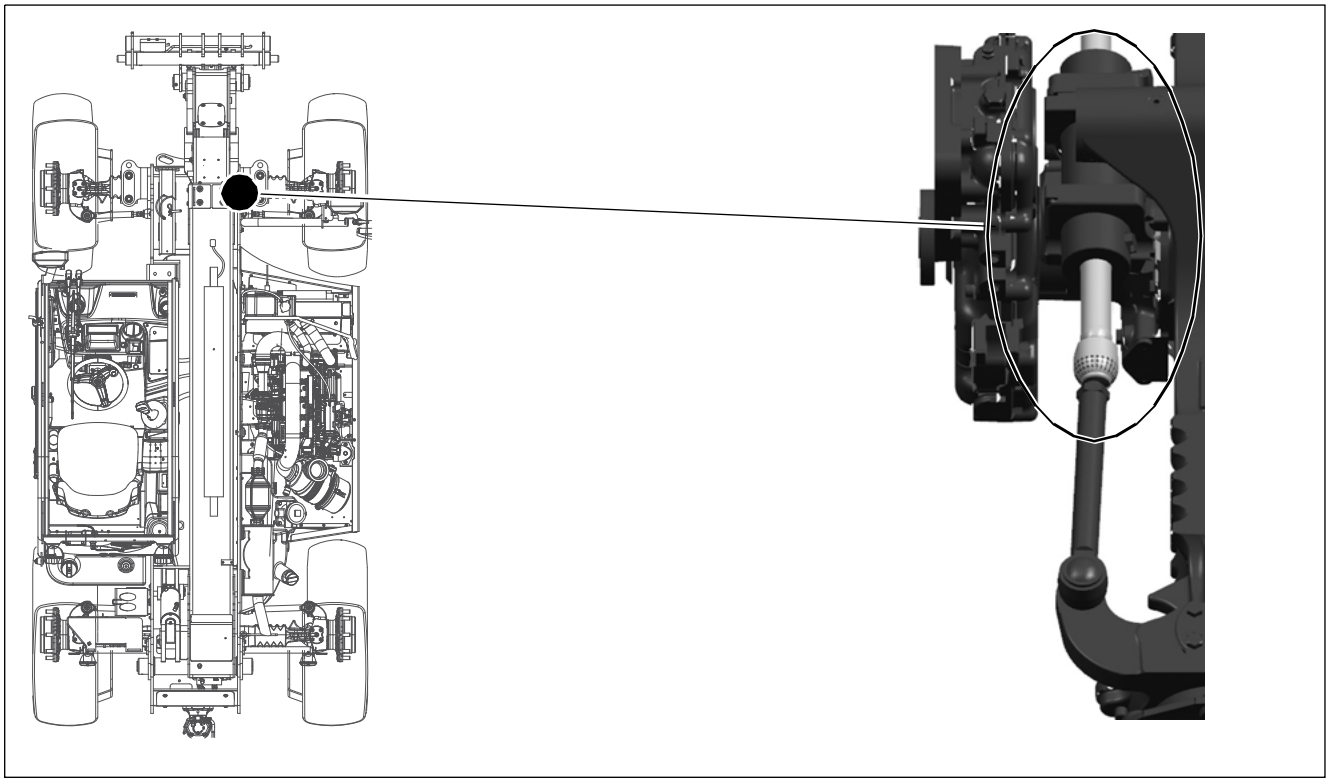

Rear axle steering cylinder 019

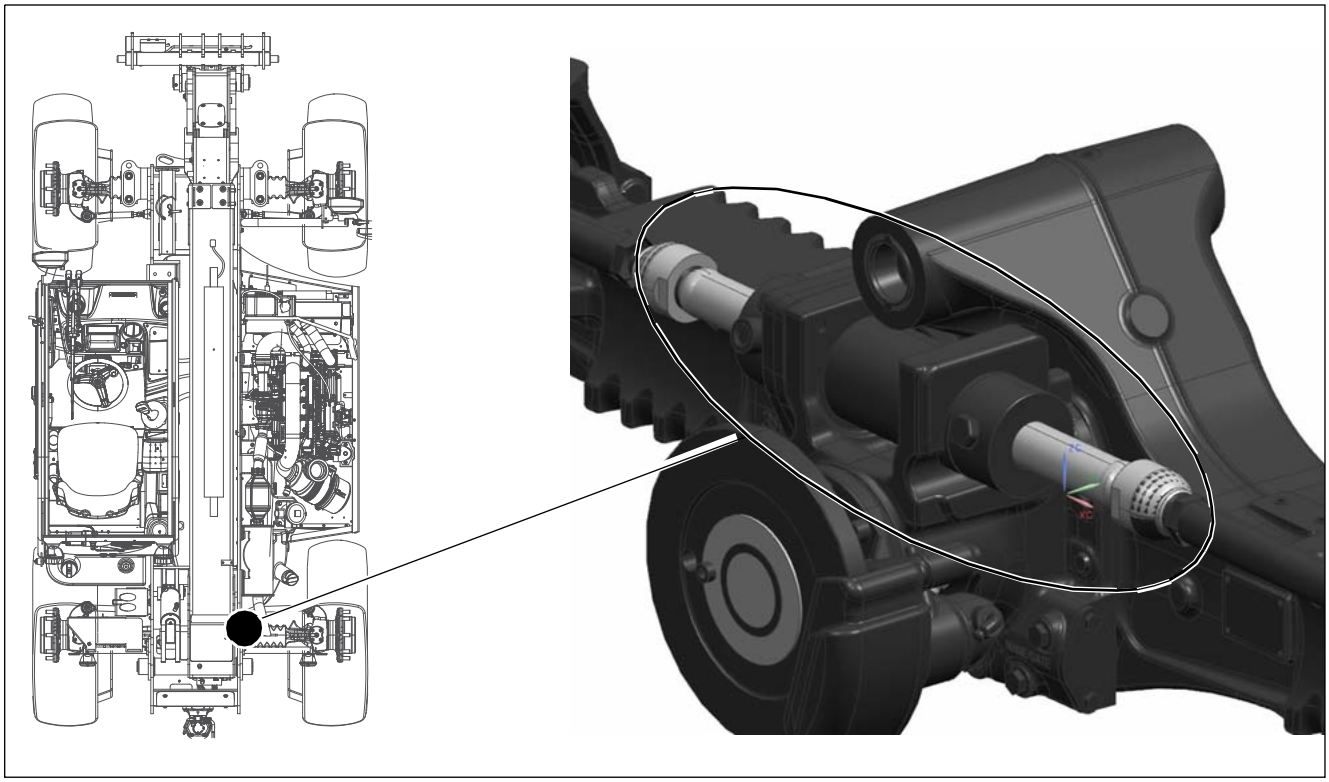

Oil cooler hydraulic oil 027

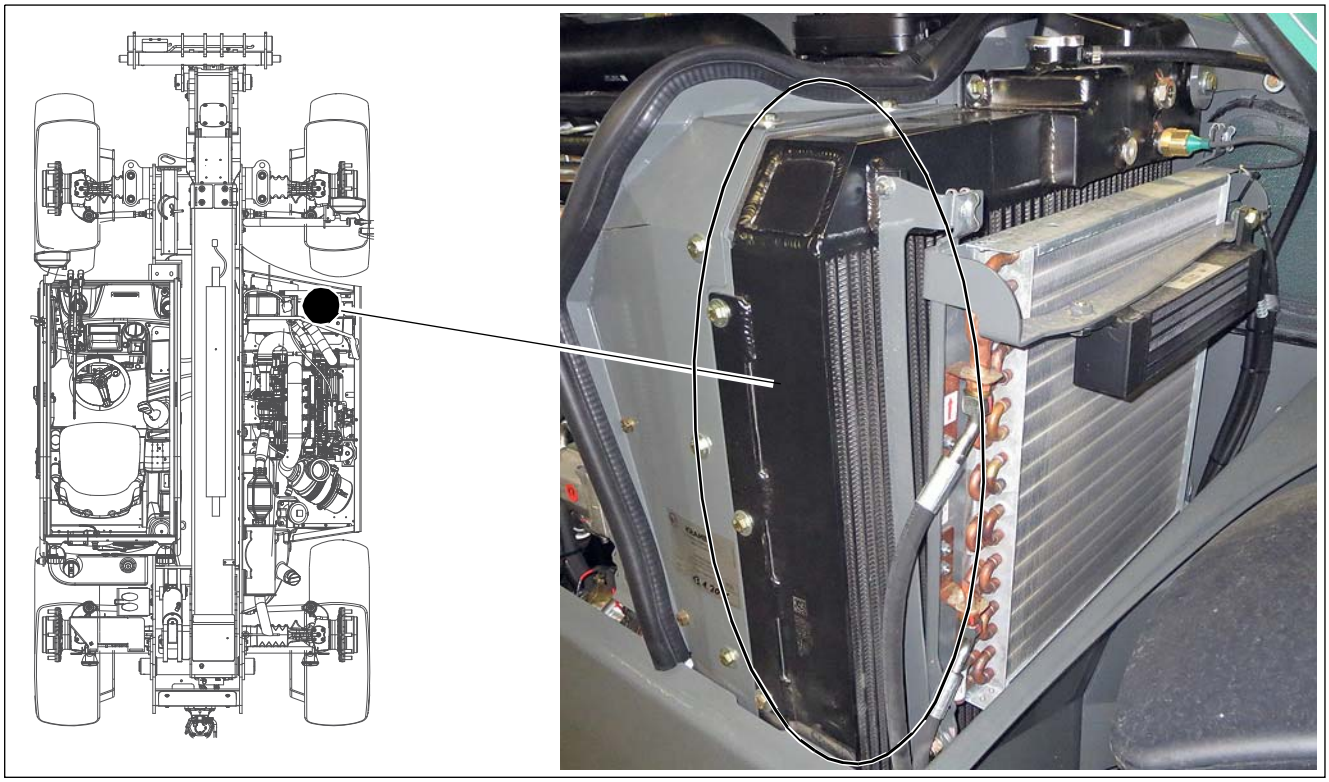

Master brake cylinder 030

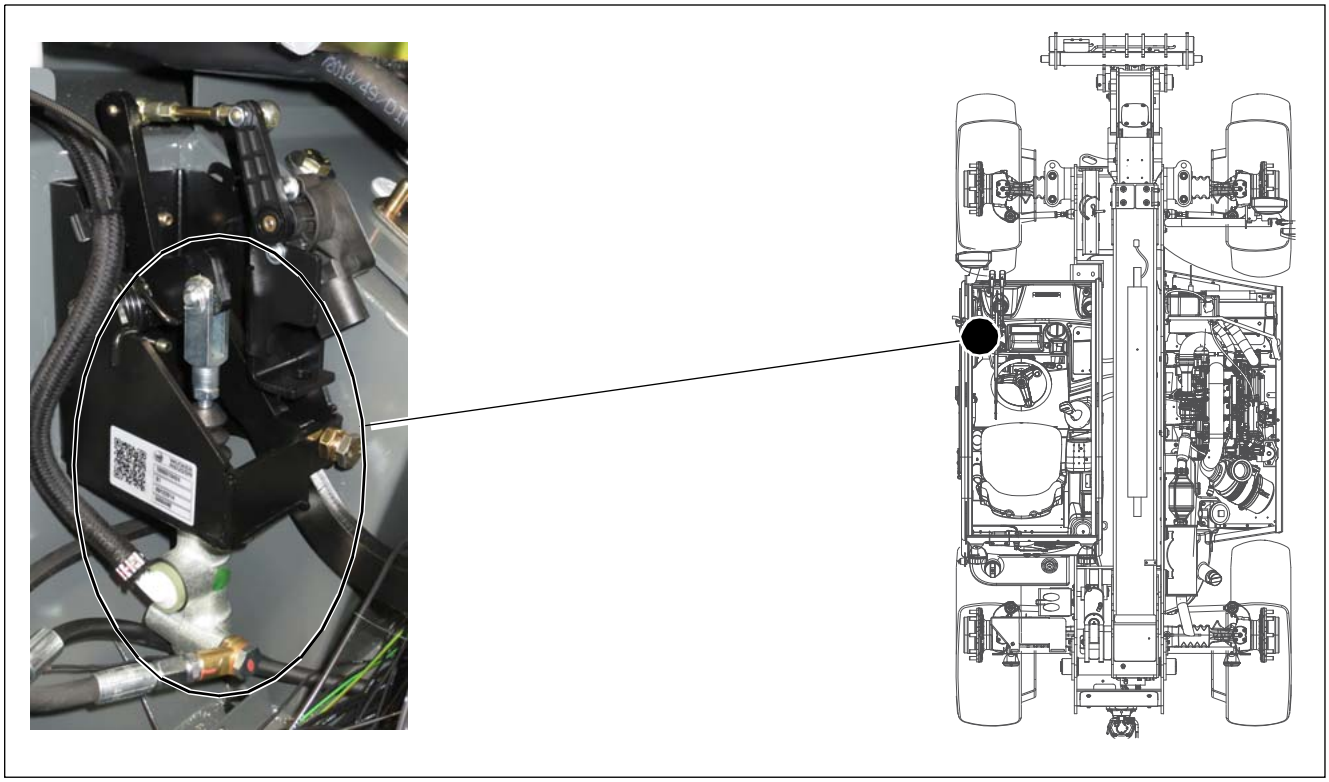

Emergency lowering pressure accumulator 077

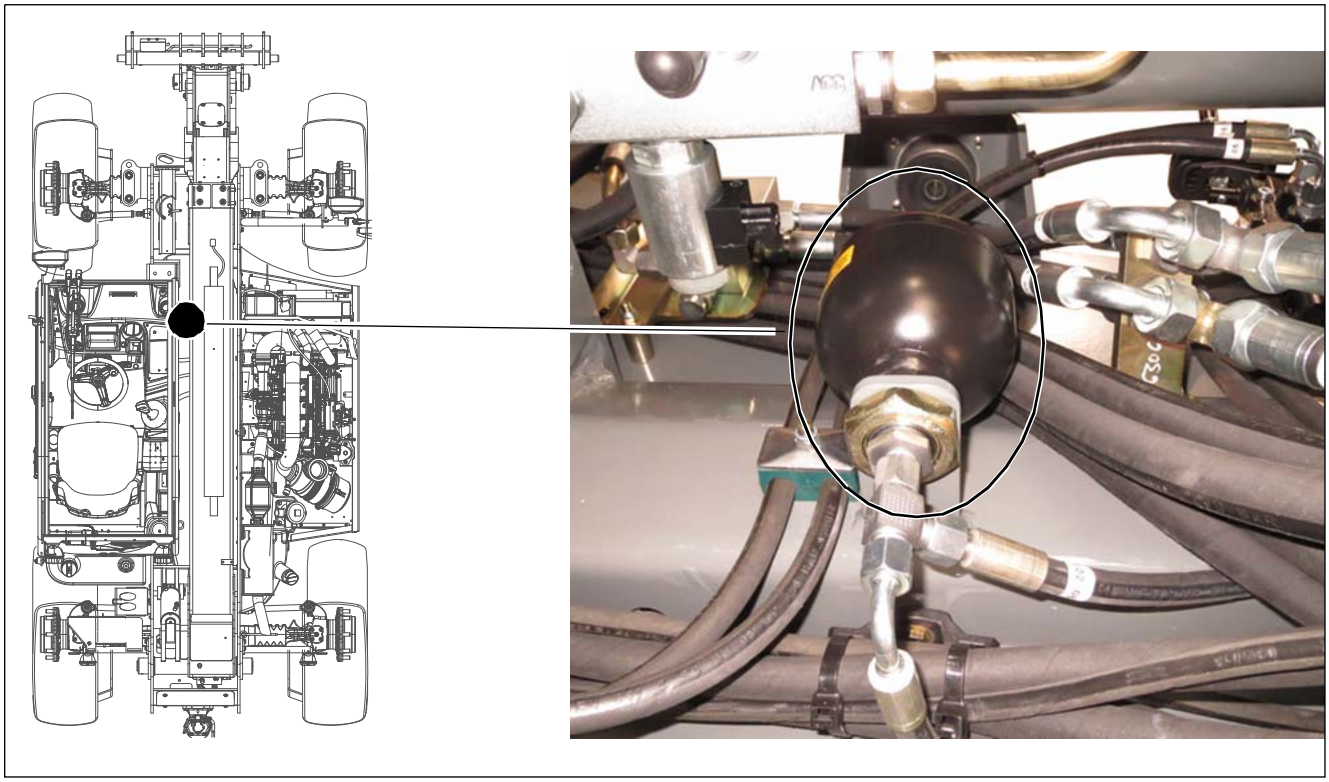

Pressure accumulator 080

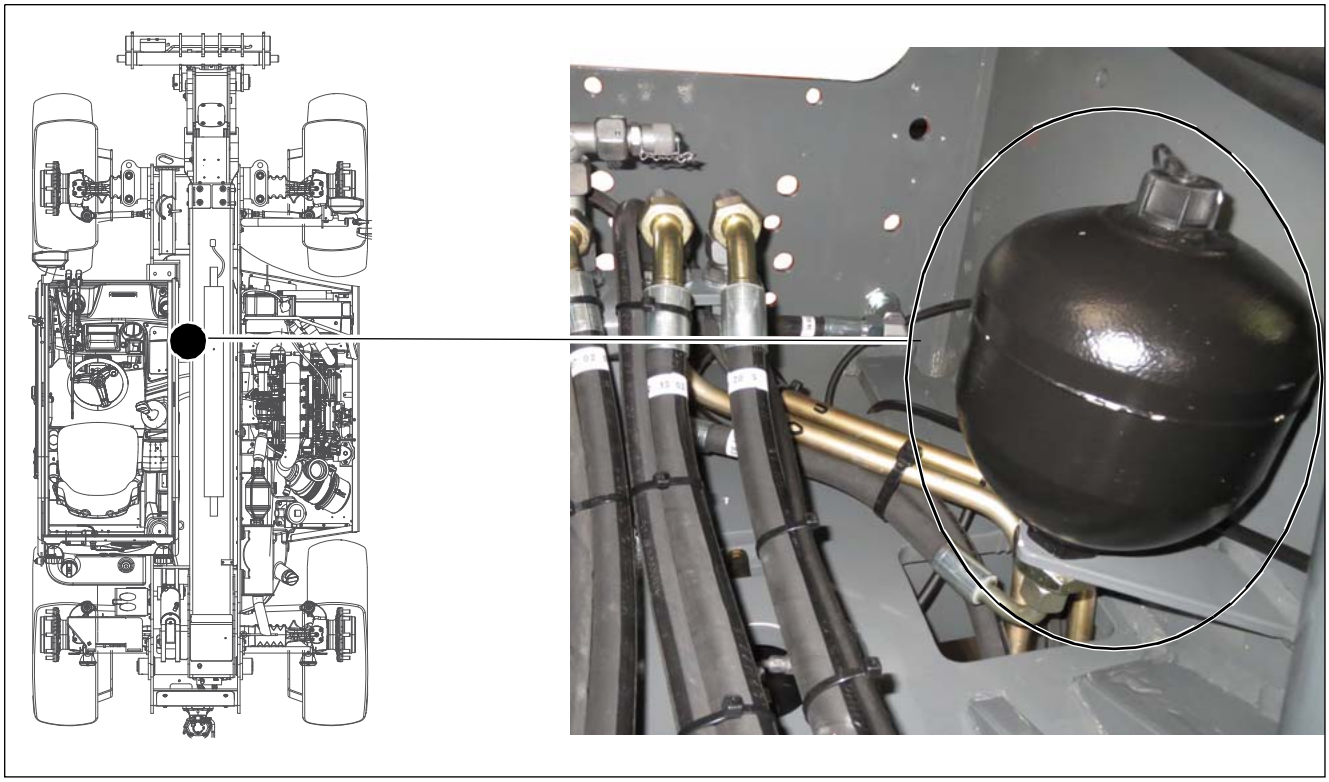

Load safety valve with hose burst valves, tipping/ compensating cylinder 082

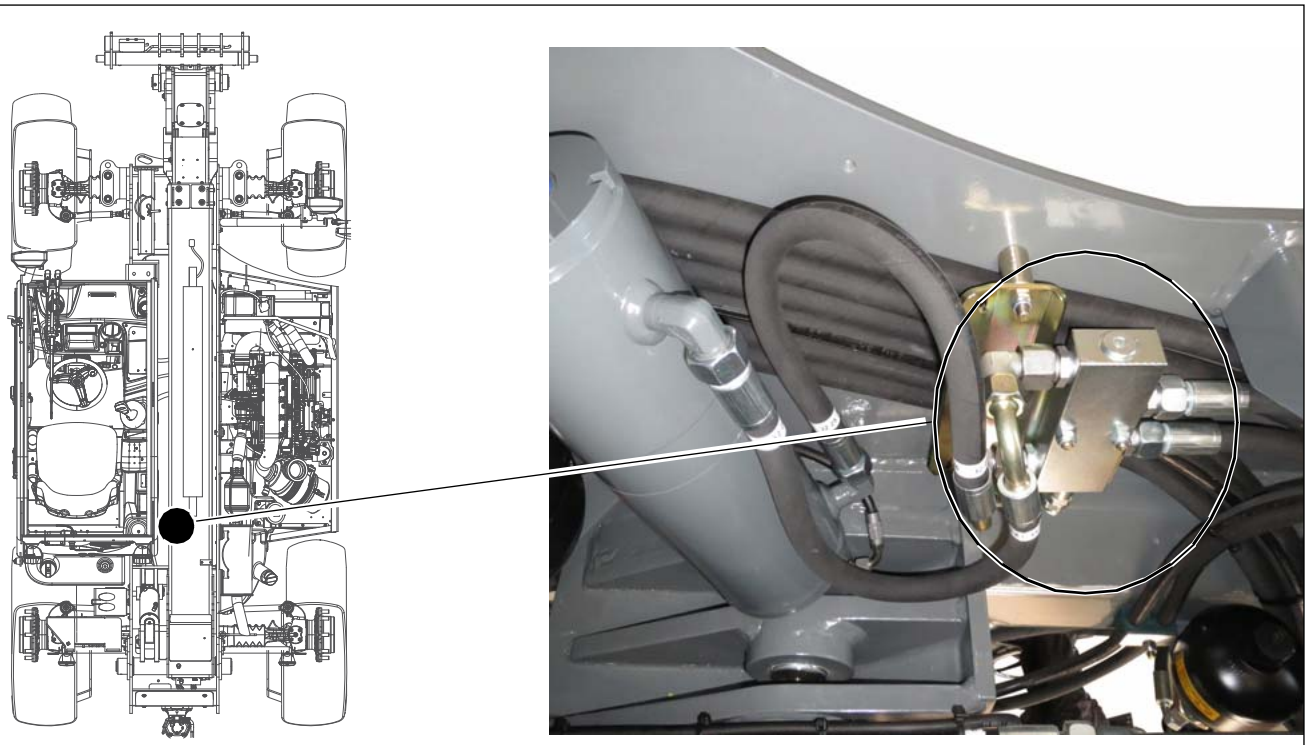

Hose burst valve for tilt ram 088

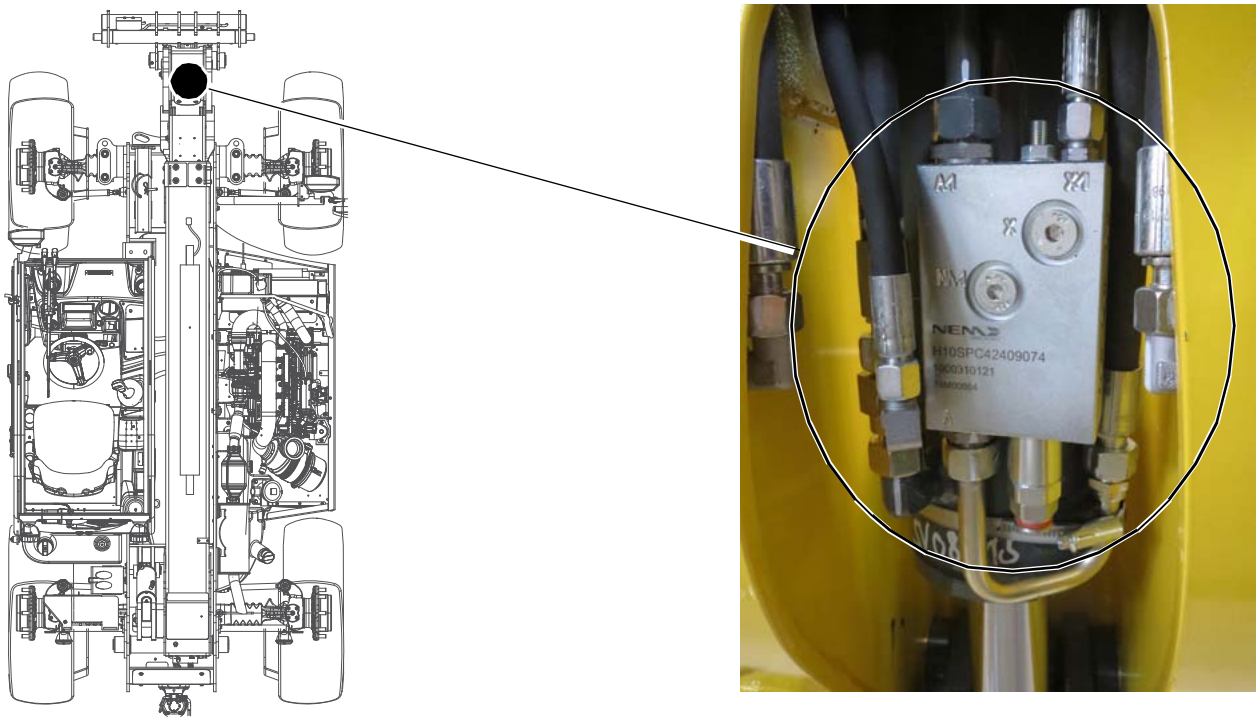

Hose burst valve for push-out ram 090

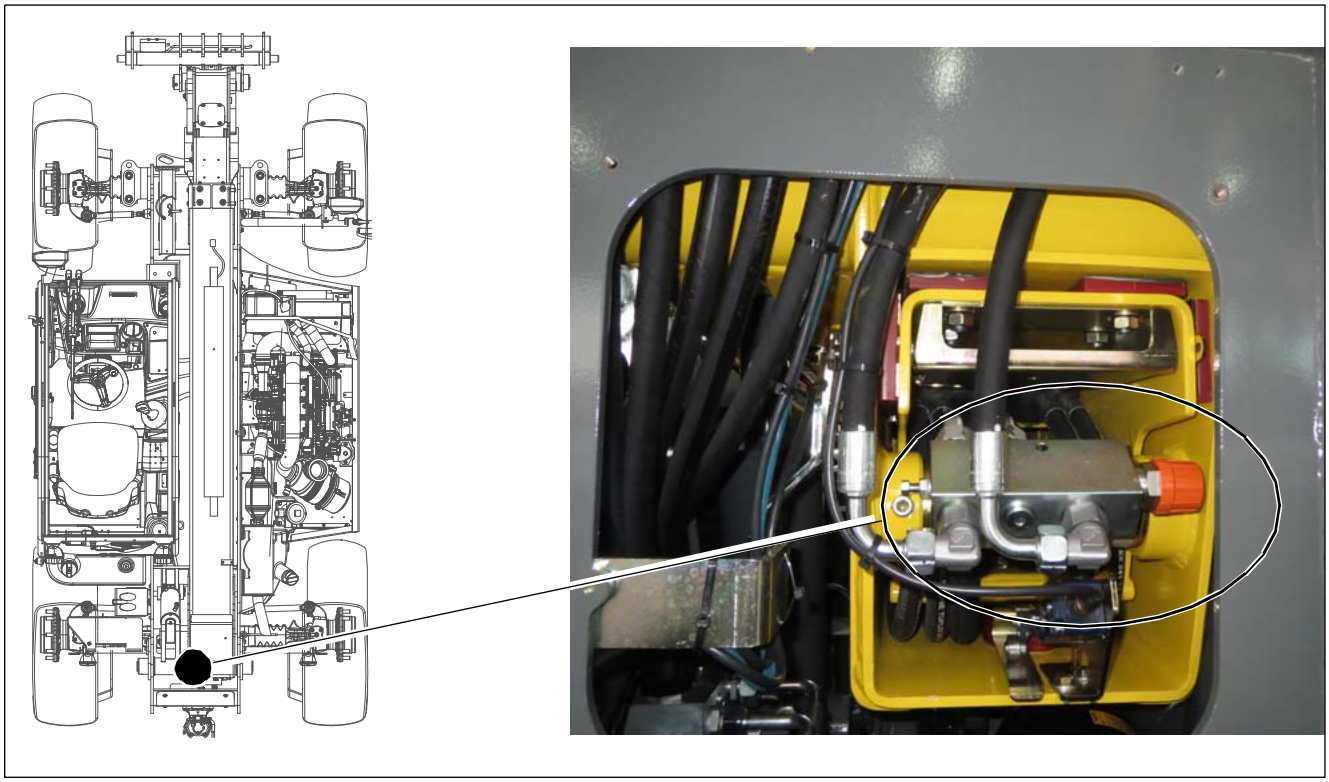

Locking cylinder quick change plate 091

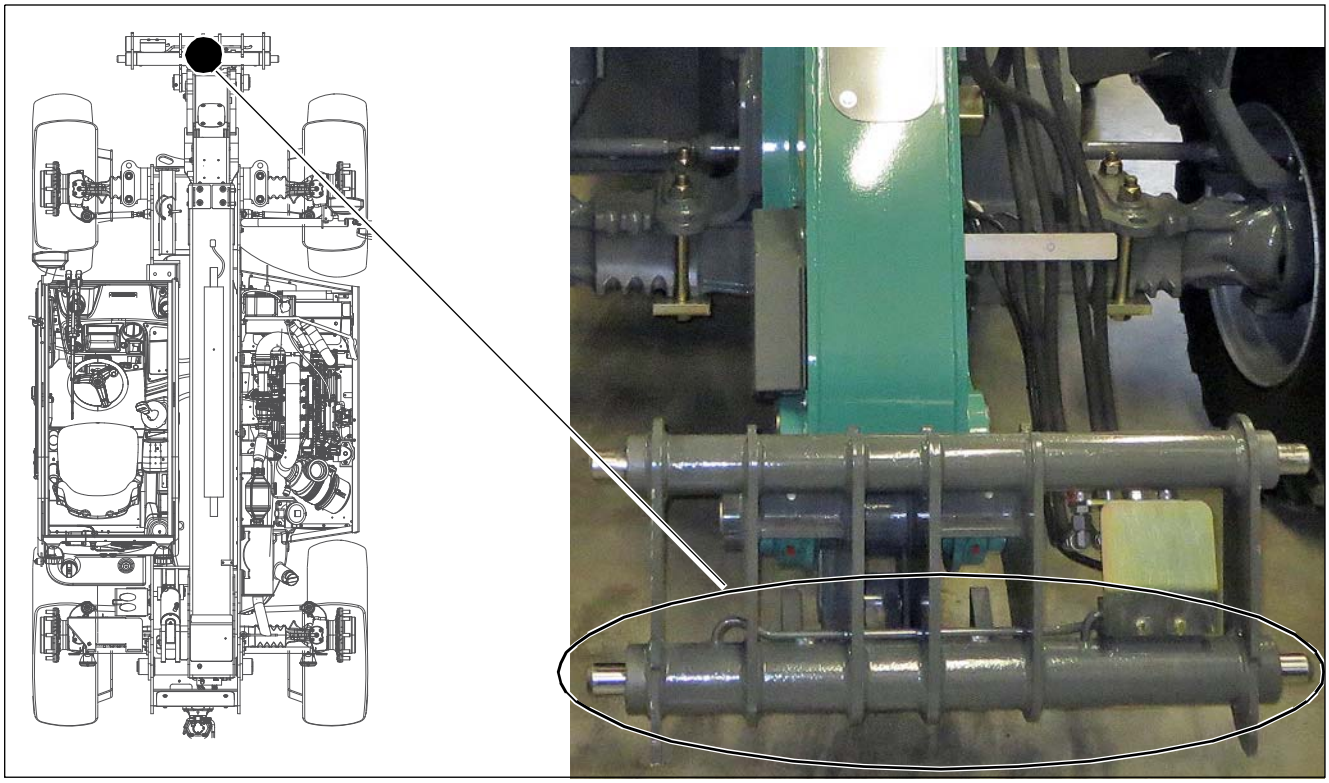

Autohitch ram 092

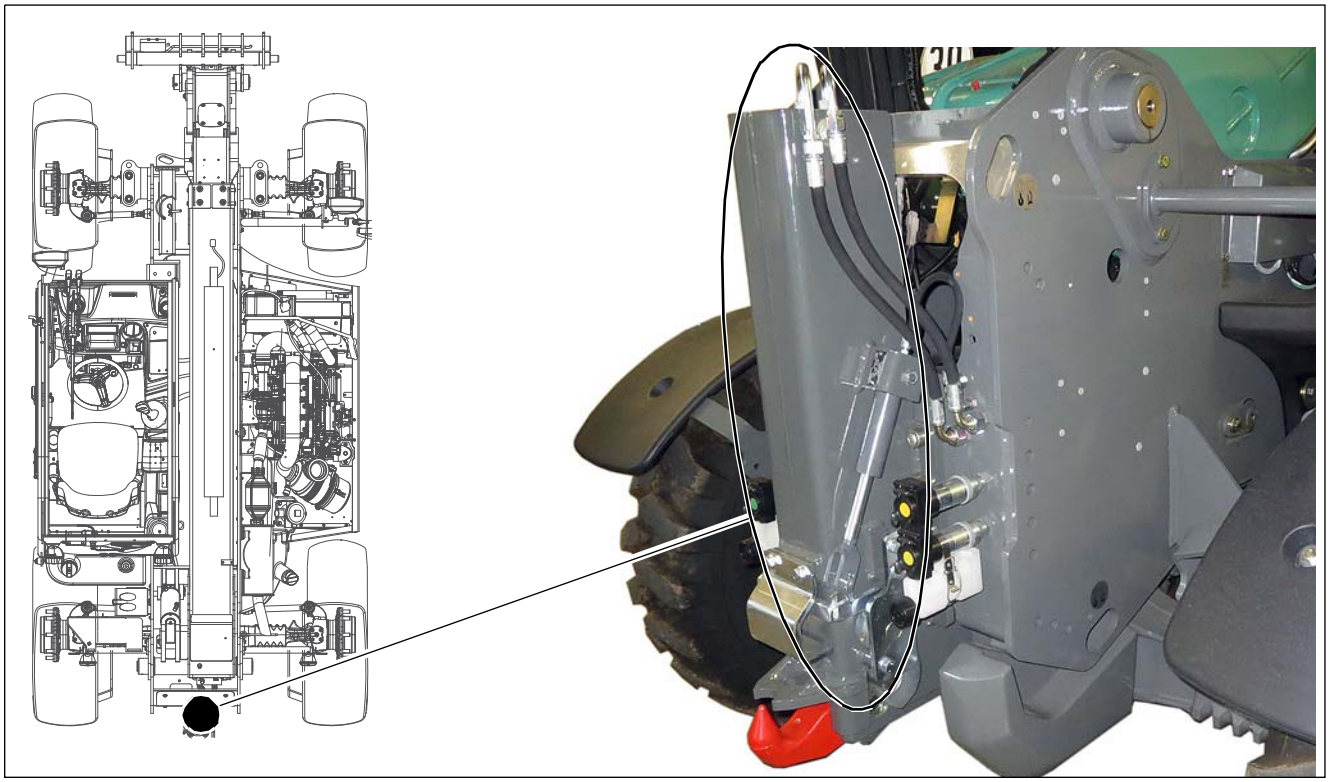

Autohitch locking cylinder 093

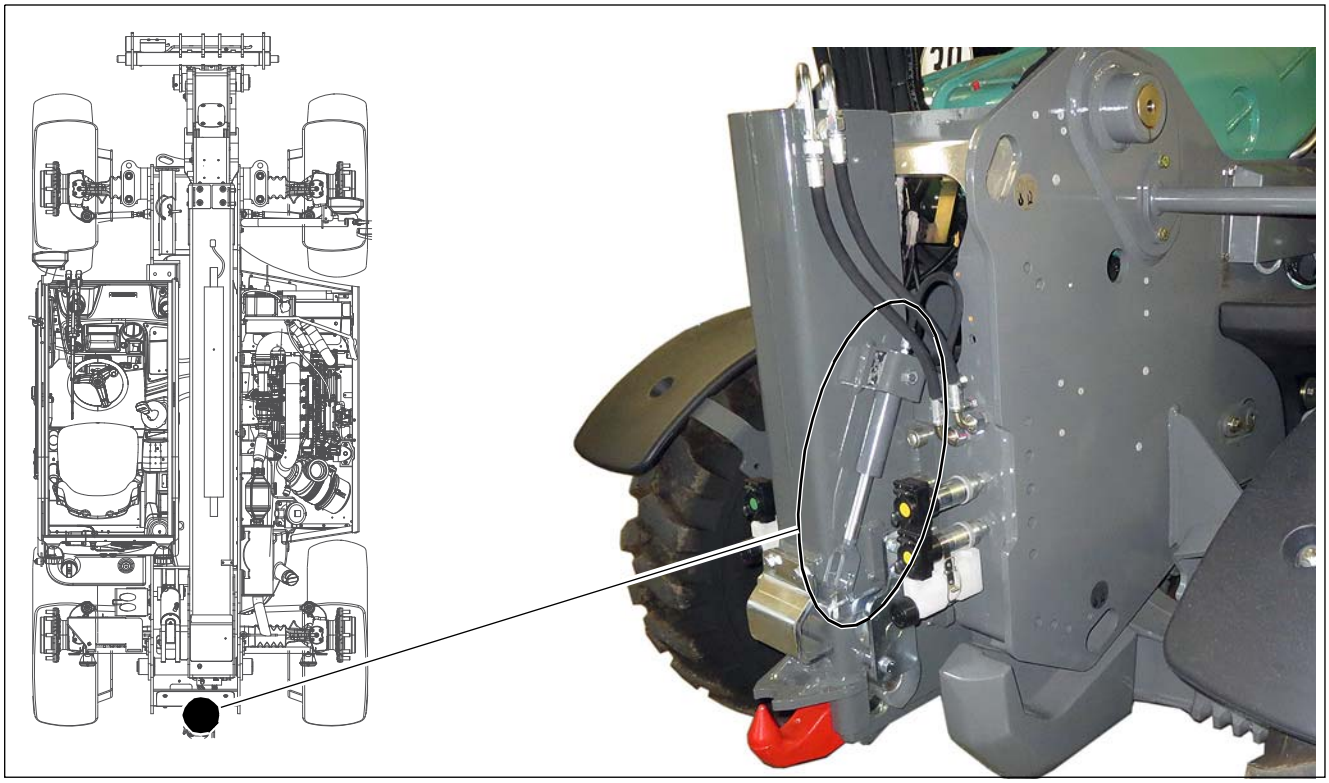

Load stabilizer (Y020) 112

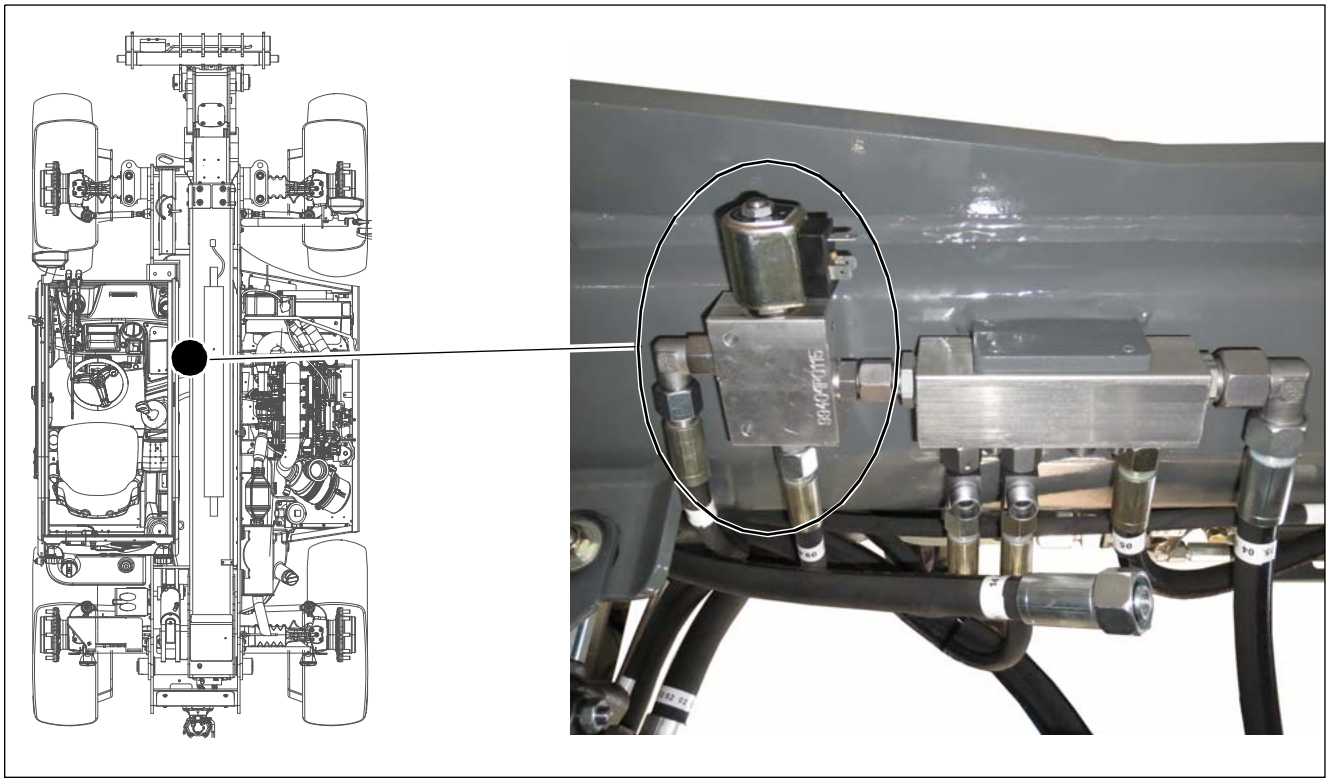

Load stabilizer (Y021) 113

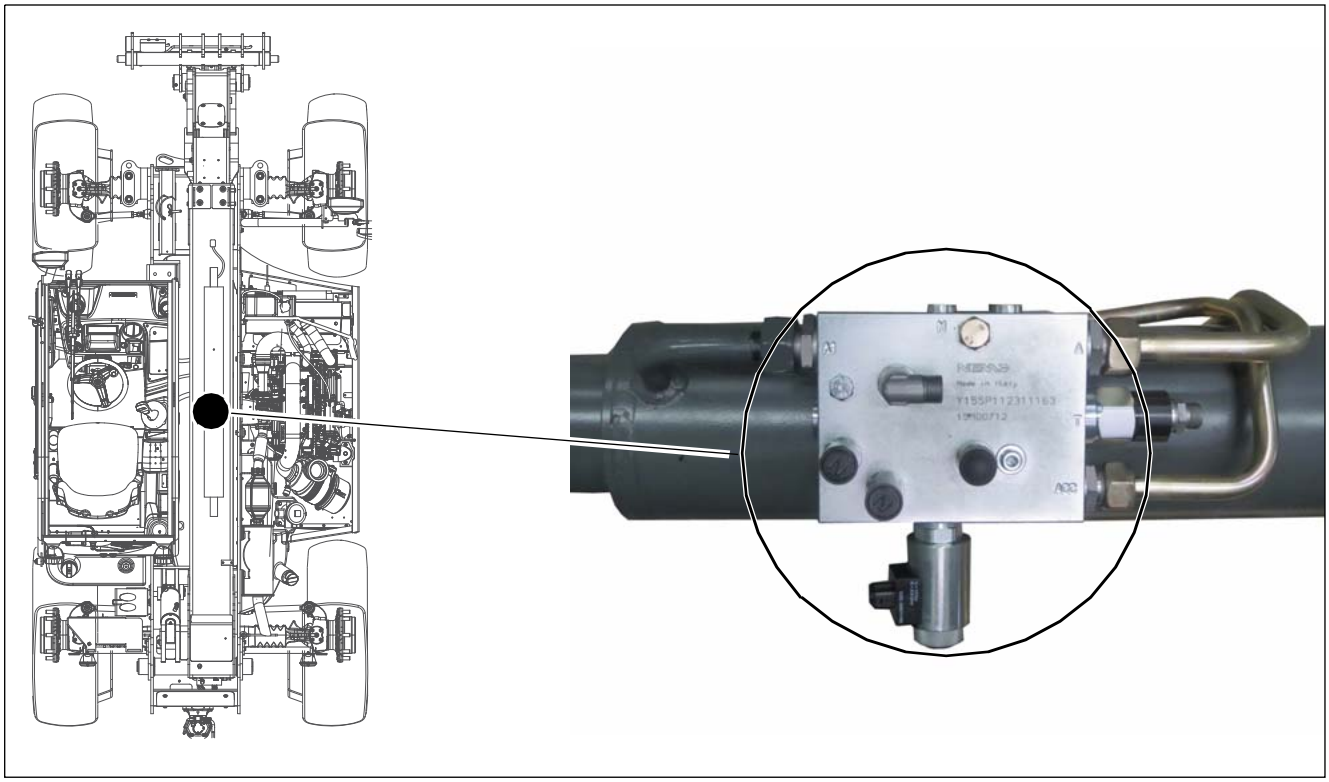

Solenoid valve for quick hitch lock (Y025) 117

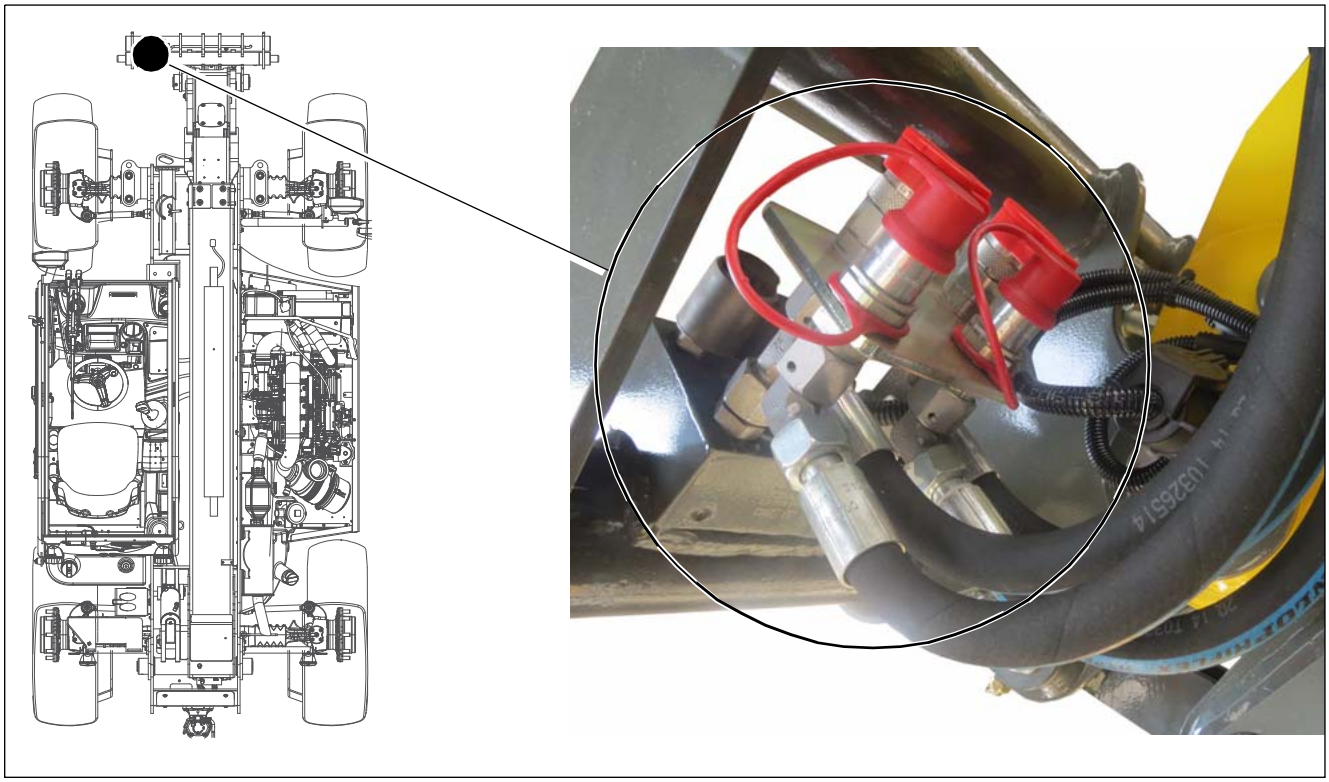

Solenoid valve for reversing fan (Y035, Y037) 122

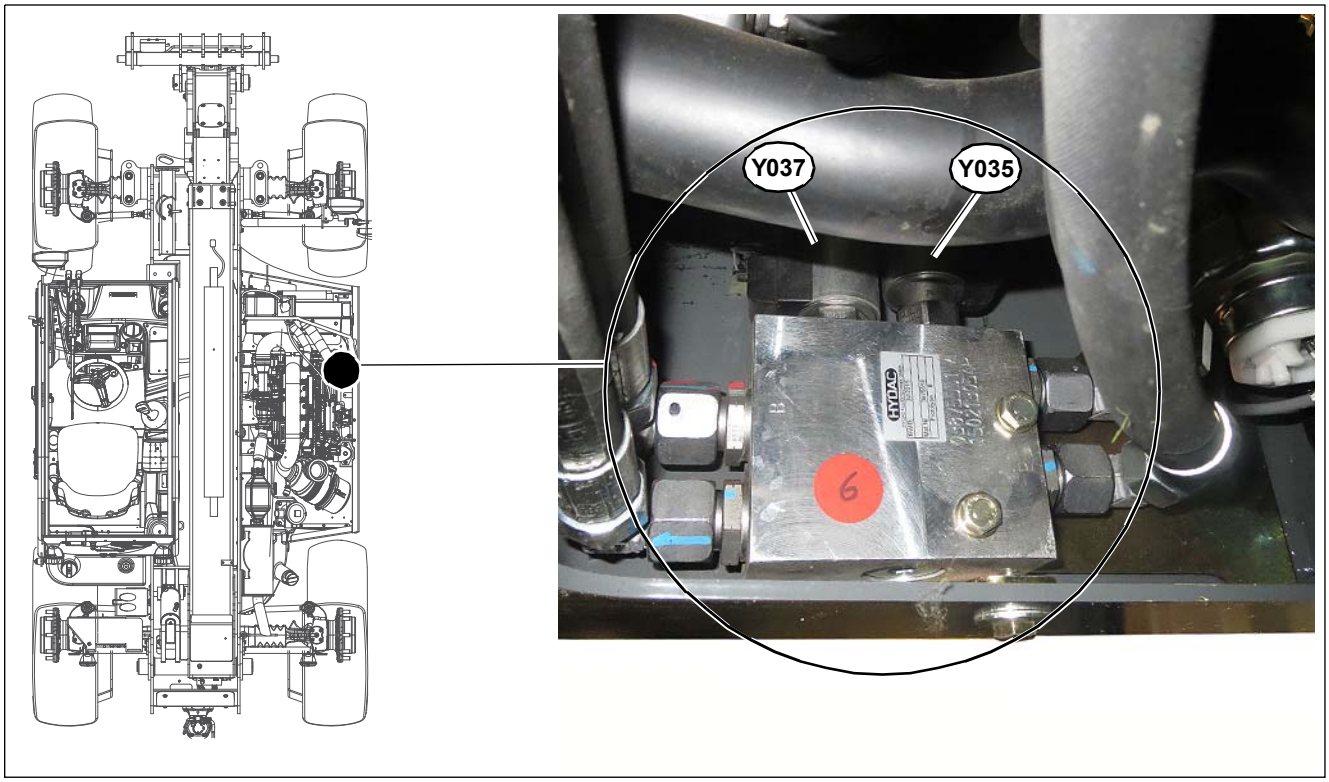

Reversing valve for tipper/hitch (Y046) 128

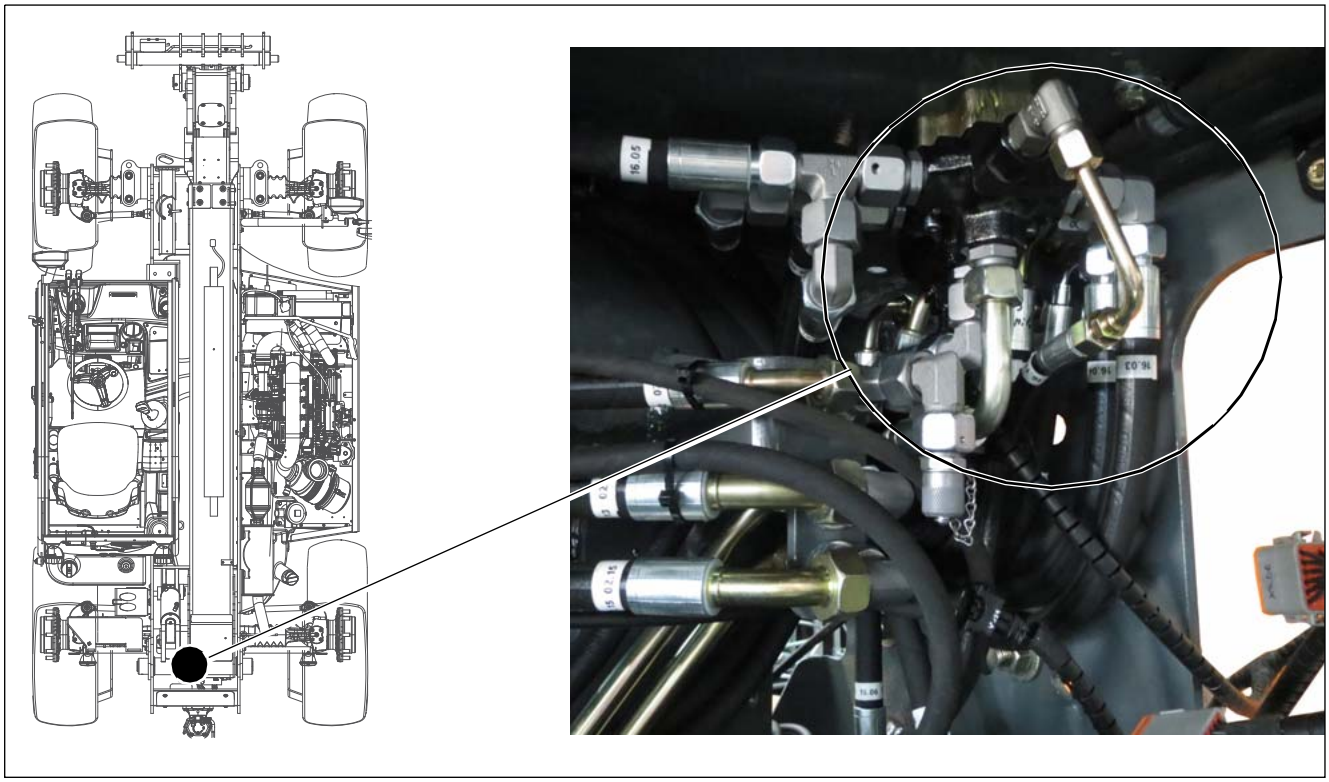

Reversing valve fourth service in front (Y051) 133

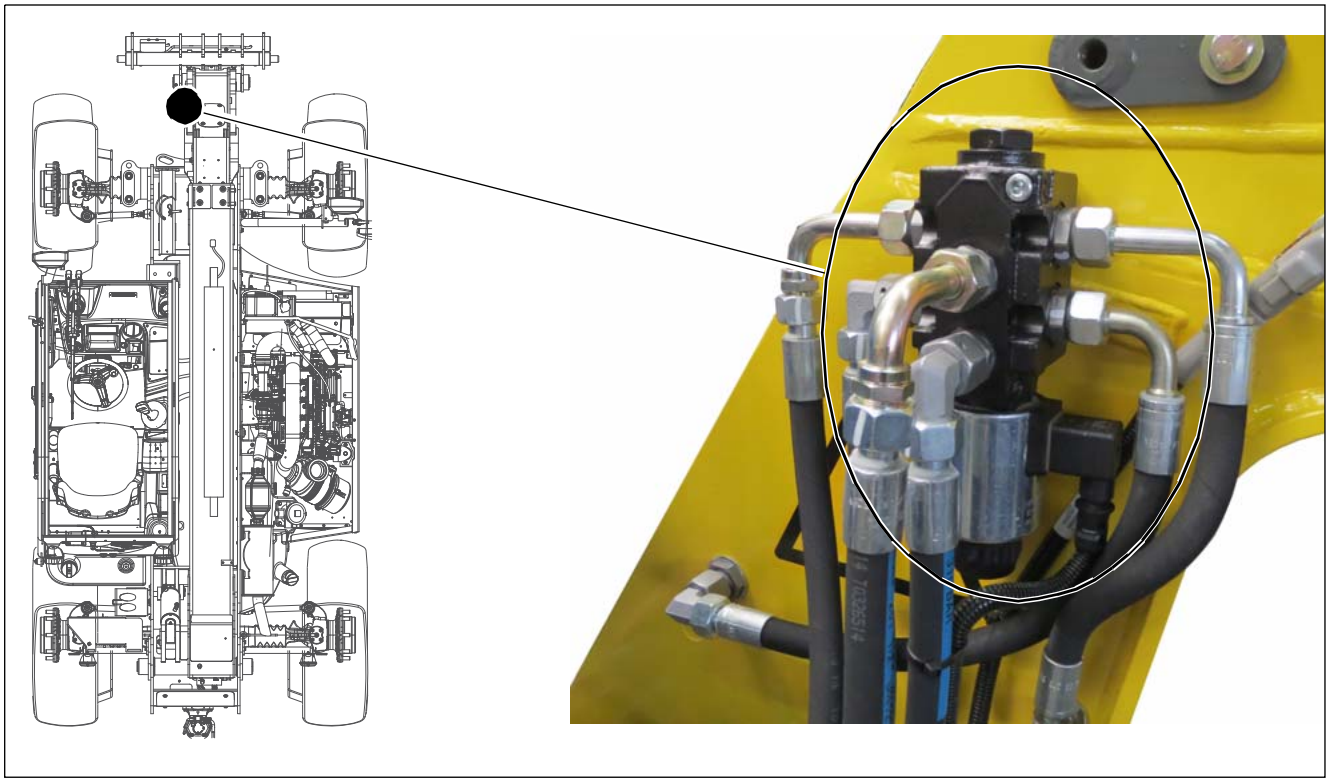

Pressure release valve third control circuit (Y106) 134

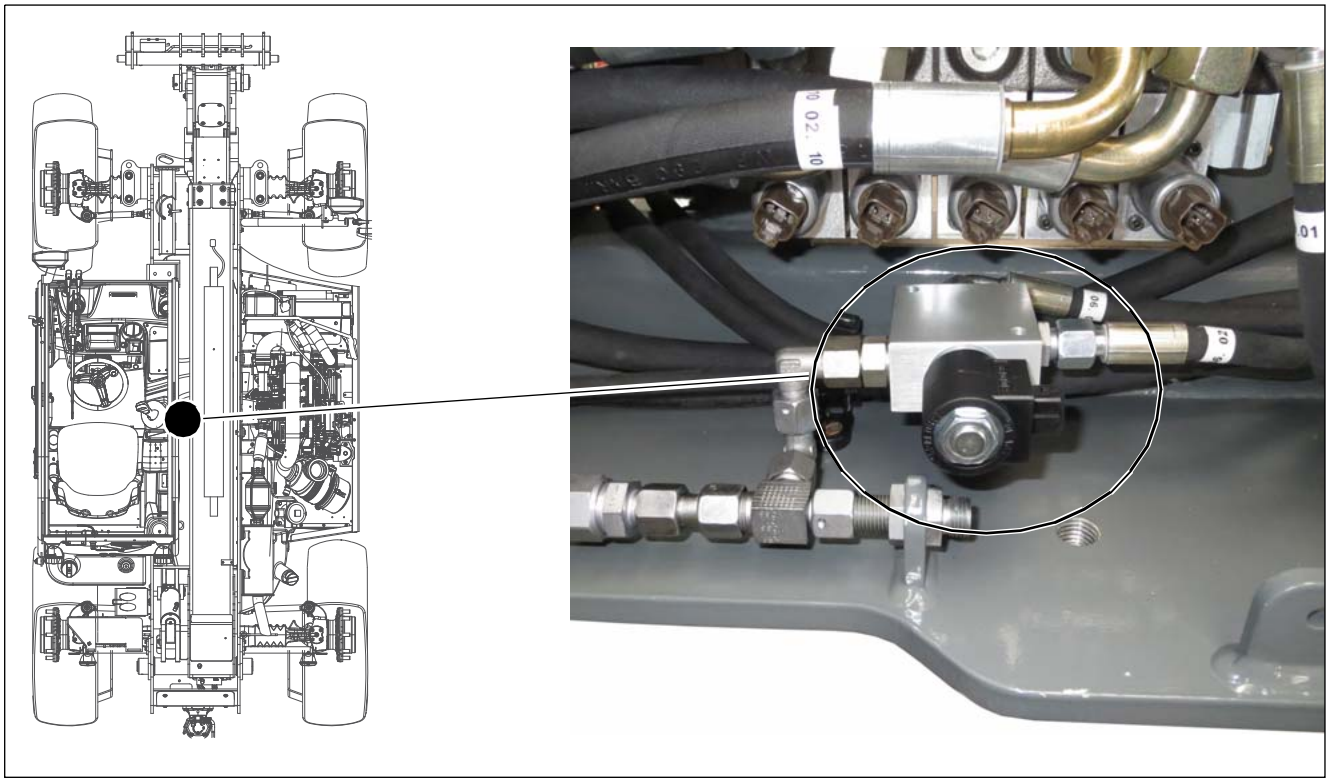

Trailer brake valve (France) 140

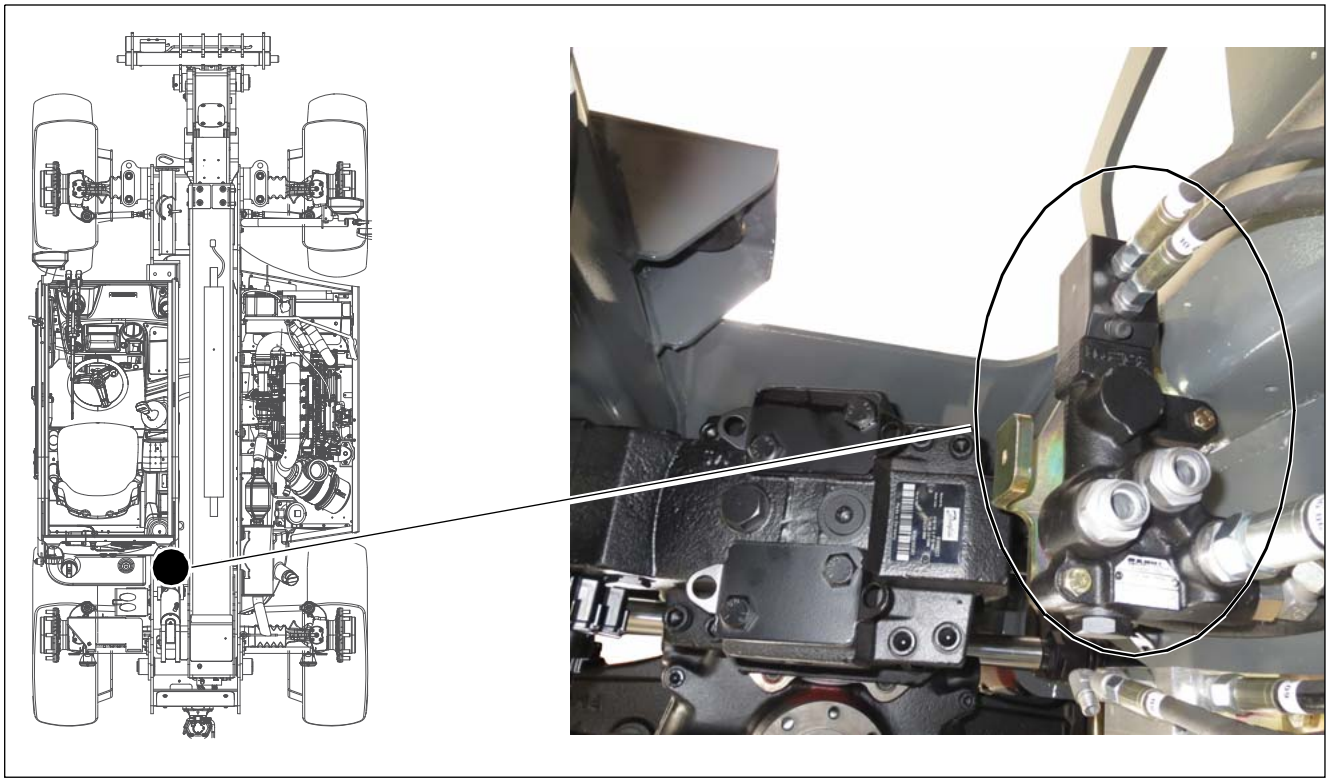

Lower relief valve for tipper (Y116) 143

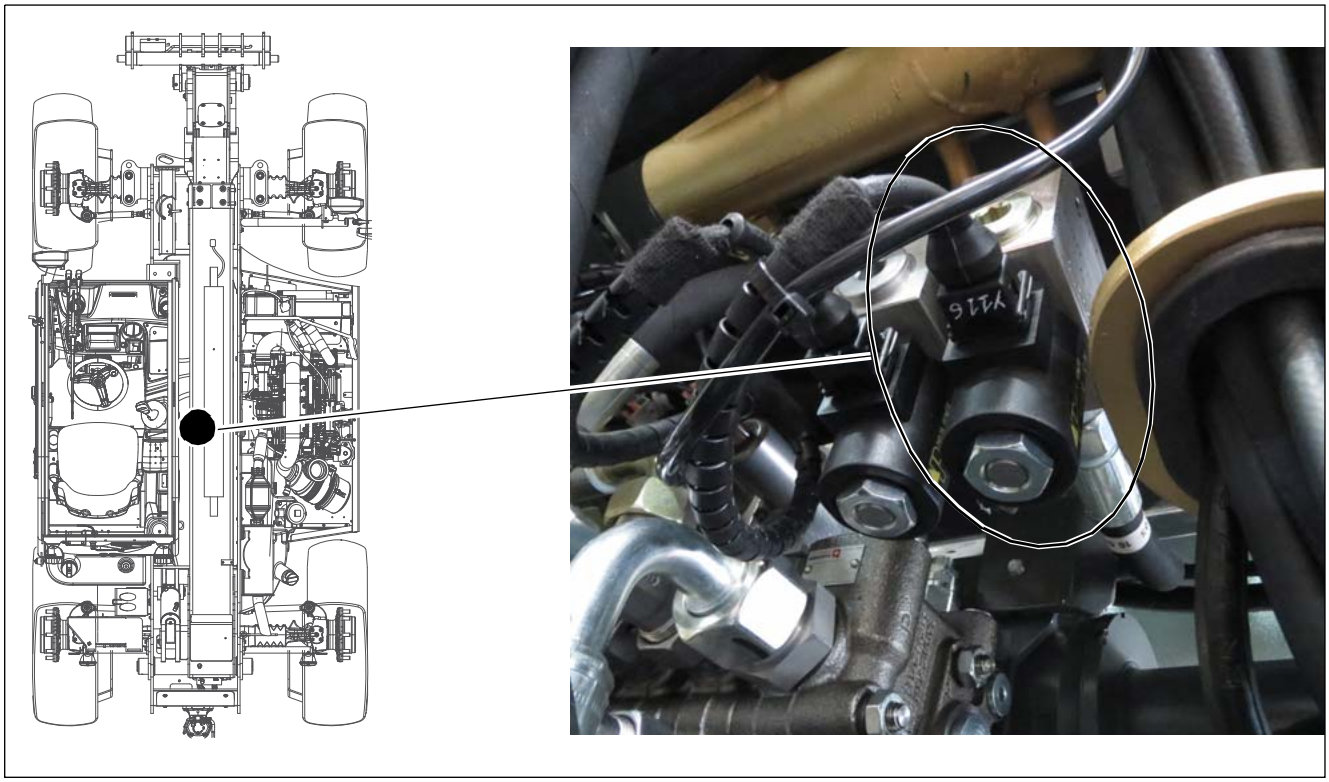

Relief valve for load stabiliser (Y020) 144

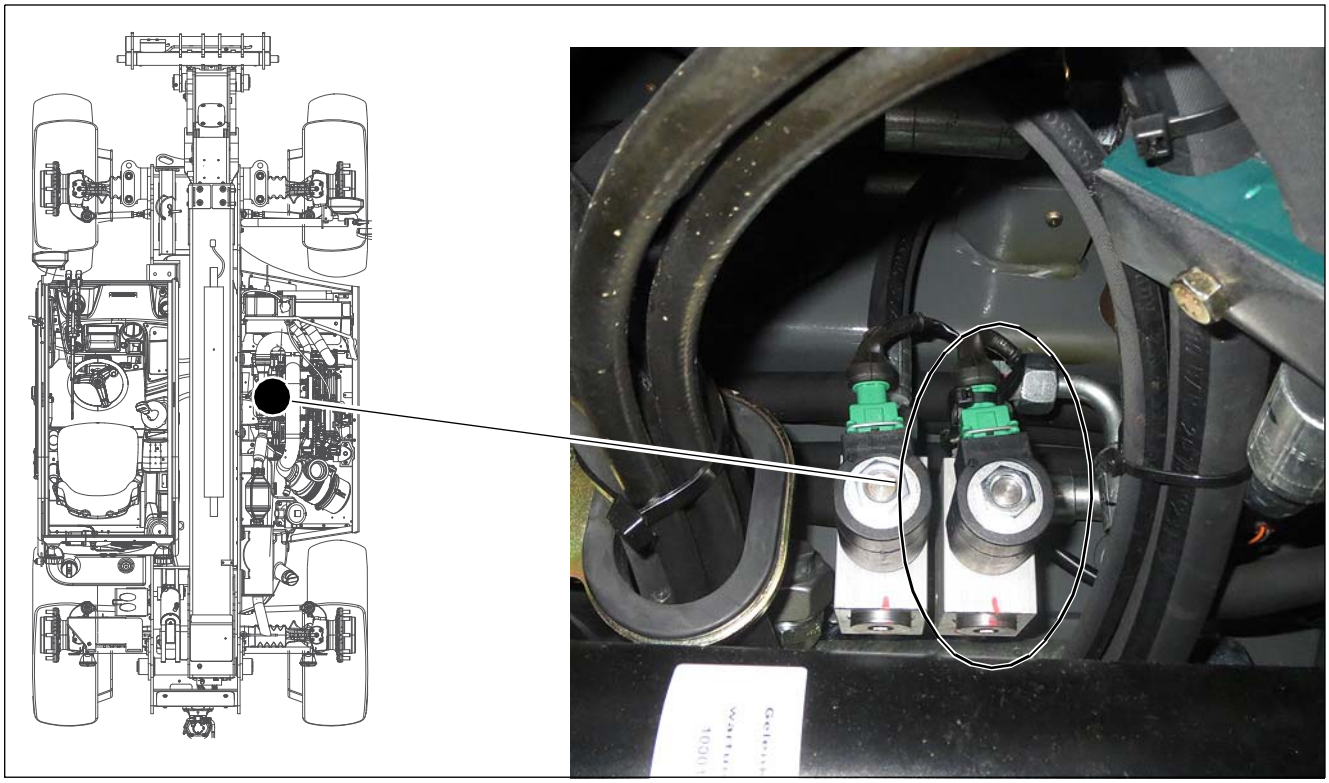

Advance hydraulic trailer brake (Y159)/unlock auto hitch (Y129) 162

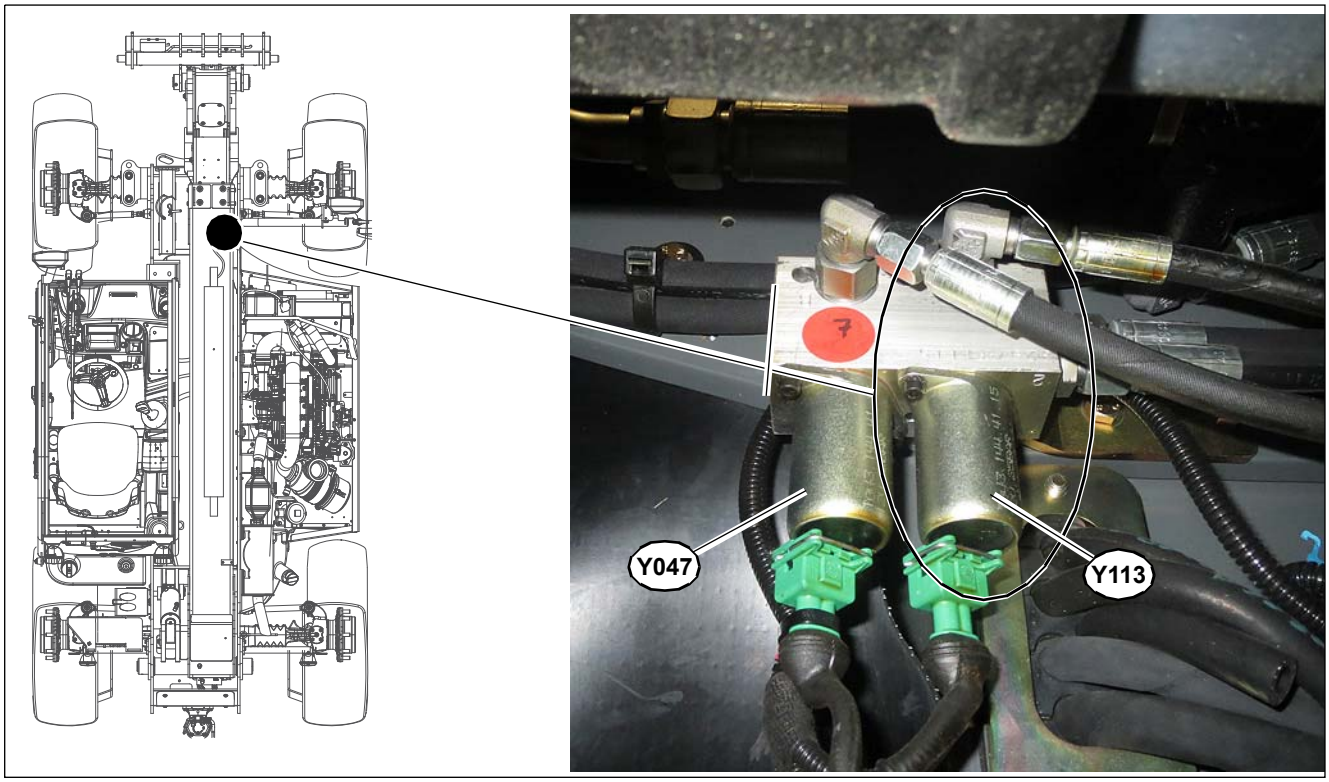

EID	Designation
129	Solenoid valve for unlocking auto hitch (Y047)
159	Solenoid valve for hydraulic trailer brake (Y113)

Brake calliper, rear axle 161

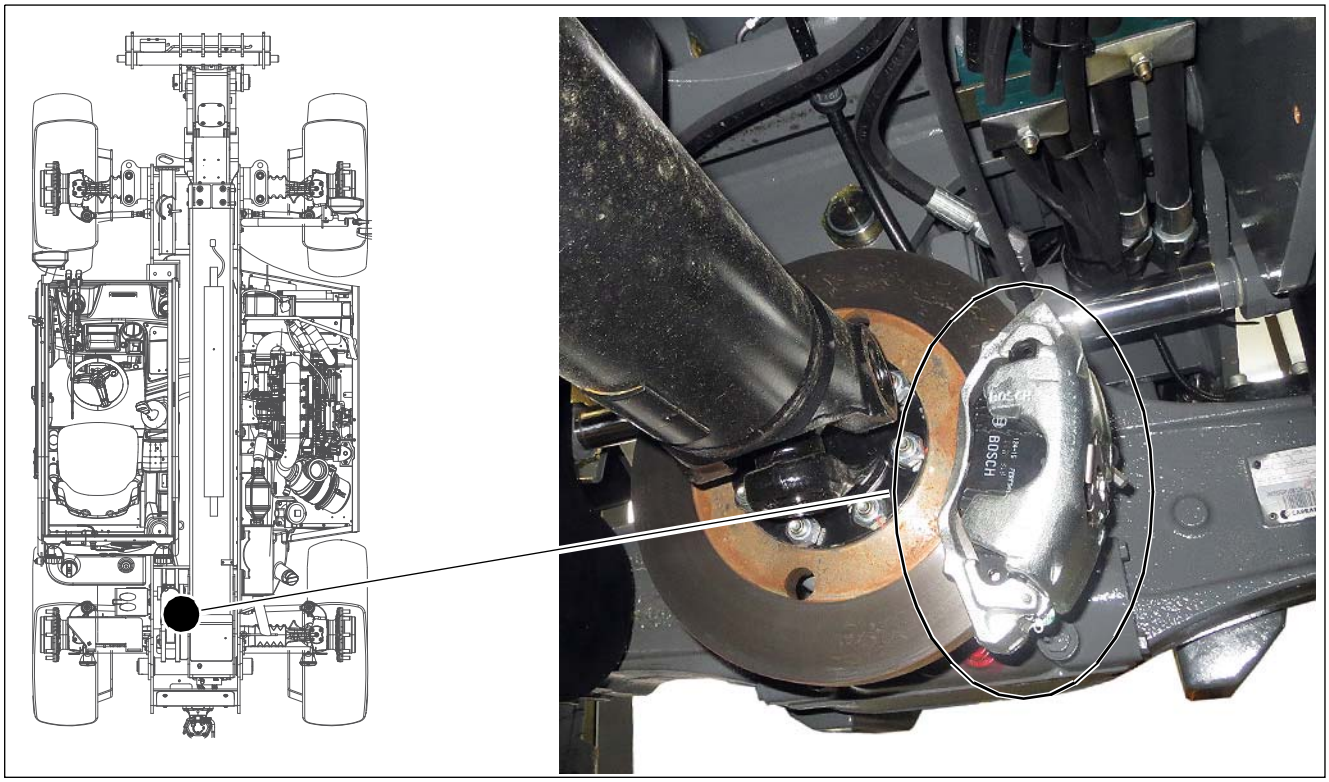

High pressure filter 167

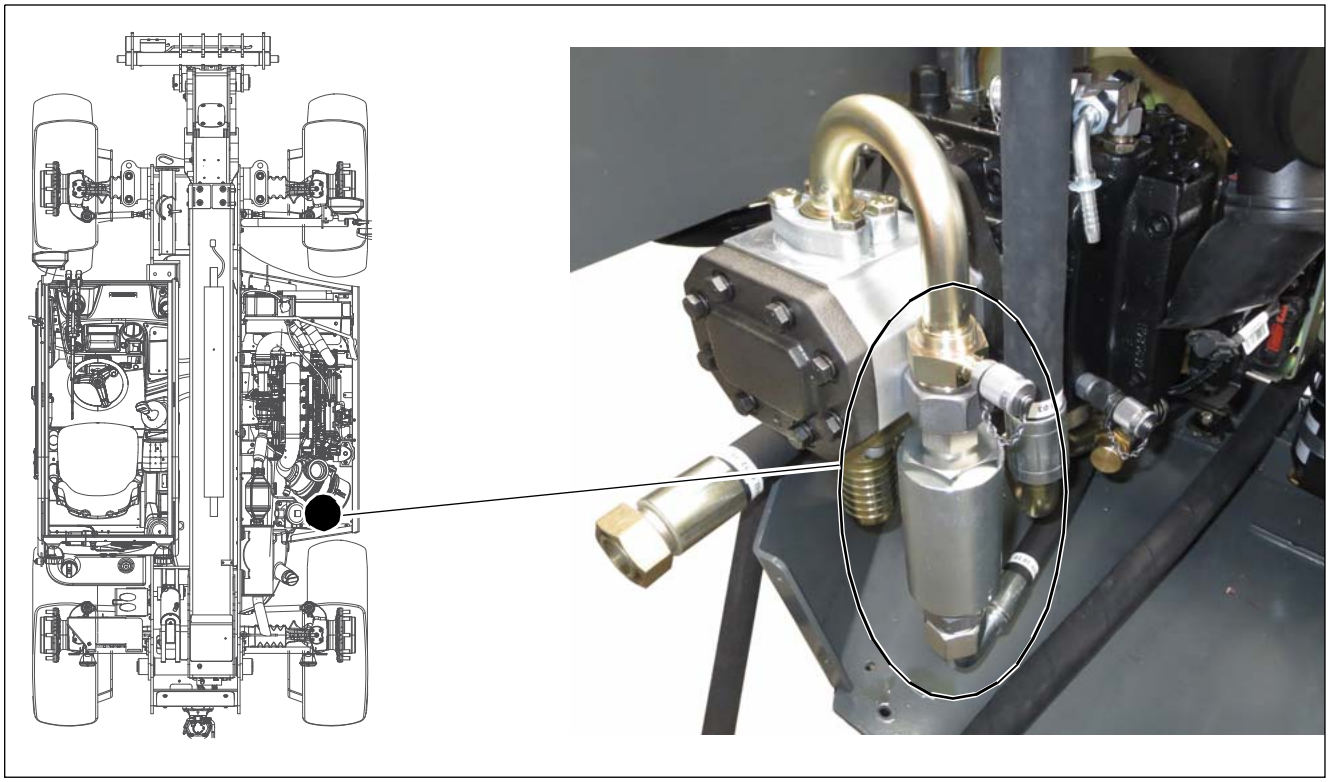

Solenoid valve for differential lock (Y009) 169

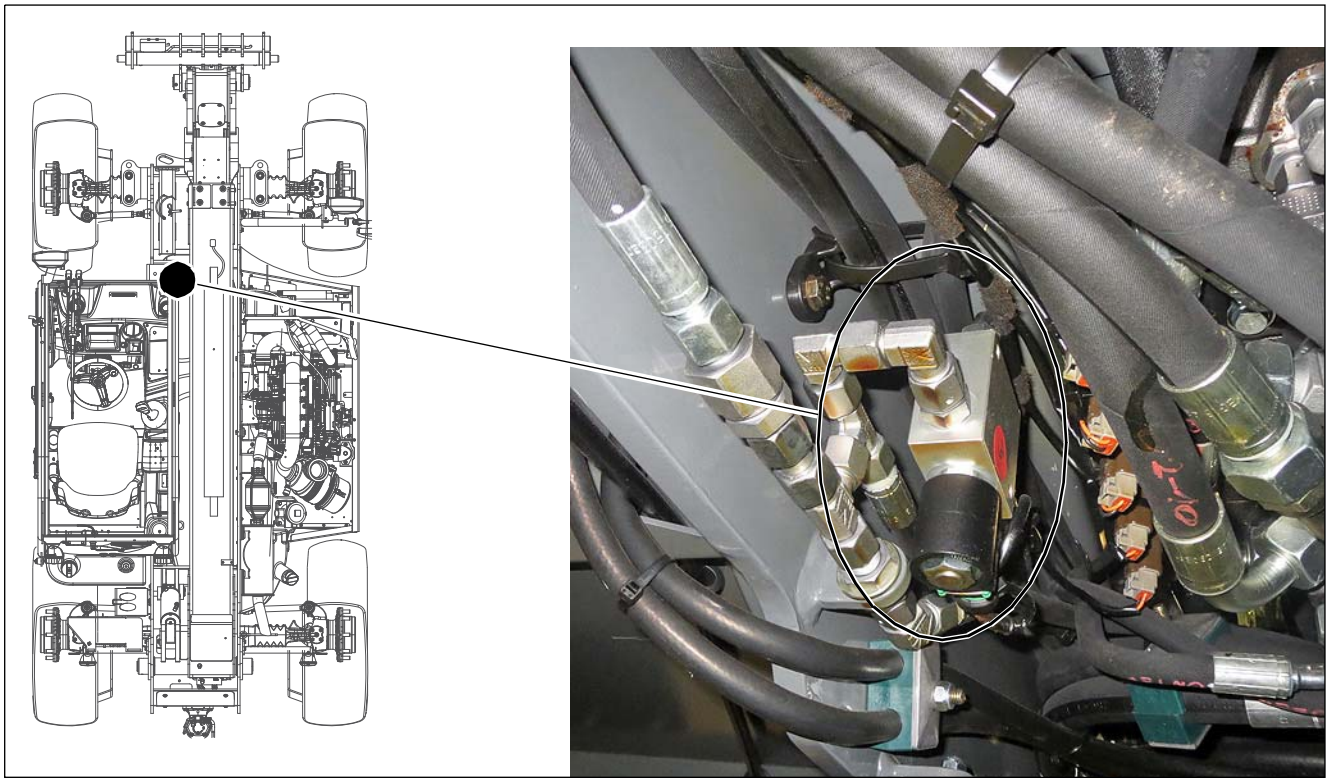

19.2 Installation position of electrics

EID	Description	Page
B001	Fuel level sensor	19-24
B006	Engine temperature sensor	19-24
B007	Hydraulic oil temperature sensor	19-25
B008	Load sensor – strain gage	19-25
B009	Hydraulic oil temperature sensor	19-26
B010	Hydraulic pump speed sensor	19-26
B015	Coolant level sensor	19-27
B028	Position pickup for bucket repositioning	19-27
B087	Camera (front)	19-39
B088	Camera (rear)	19-40
D002	Joystick	19-28
G001	Alternator	19-28
M001	Starter	19-29
M002	Wiper motor (front)	19-29
M003	Wiper motor (back)	19-30
N001	Traction electronics	19-30
N004	Controller	19-31
N005	Diesel engine electronics	19-31
N015	Controller	19-31
N025	Fuse box	19-32
N031	Video box	19-40
N033	Motherboard	19-32
N034	Board	19-32
R002	Inching angle of rotation sensor	19-33
R003	Creep gear potentiometer	19-33
R023	Boom angle sensor	19-34
S004	Pressure switch, air filter	19-35
S005	Hydraulics pressure switch	19-35
S011	Parking brake pressure switch	19-36
S045	Load stabiliser pressure switch	19-36
S052	Air conditioning pressure switch	19-37
S116	Boom limit switch	19-37
S127	Pressure relief tip switch	19-38
S172	Steering mode lever limit switch (crab steering)	19-38
X001	Diagnosis connector	19-41
Y031	Magnetic clutch (compressor)	19-39

Level sensor B001 – fuel

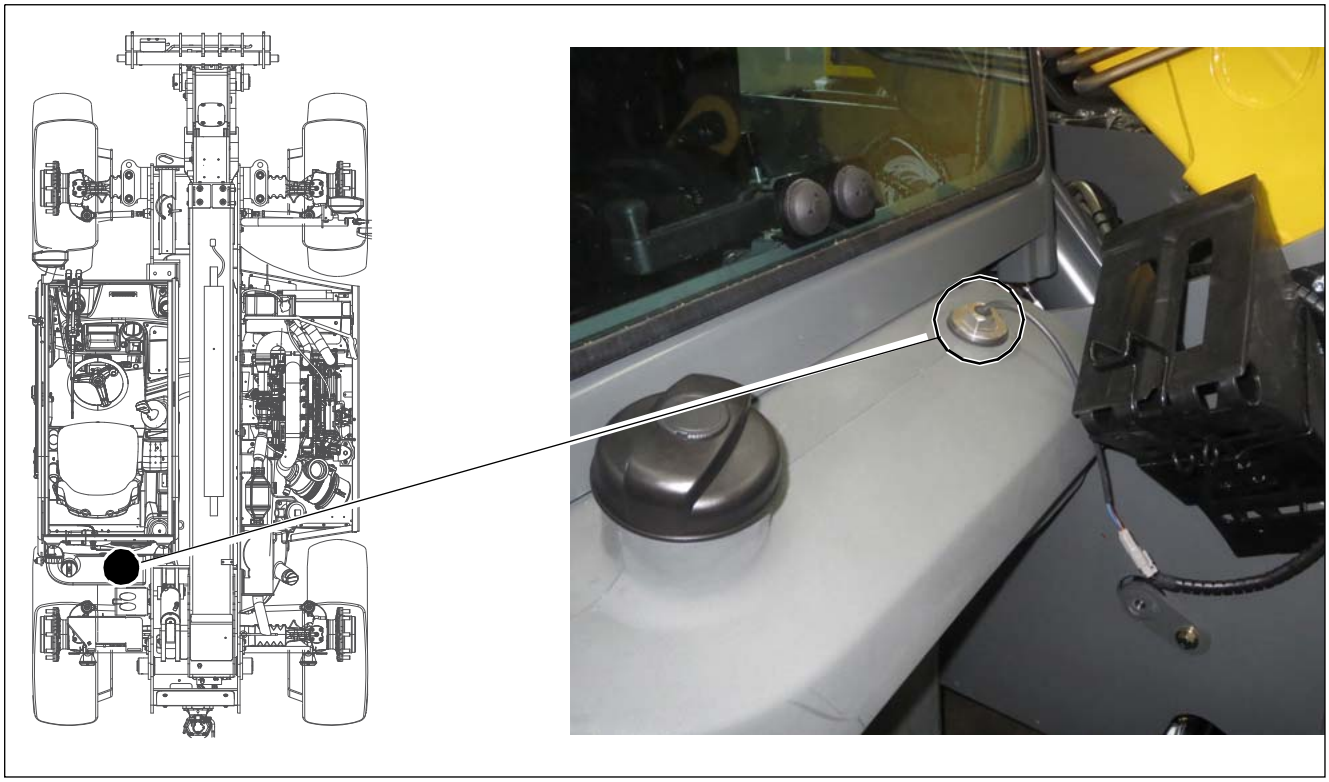

Temperature sensor B006 – engine

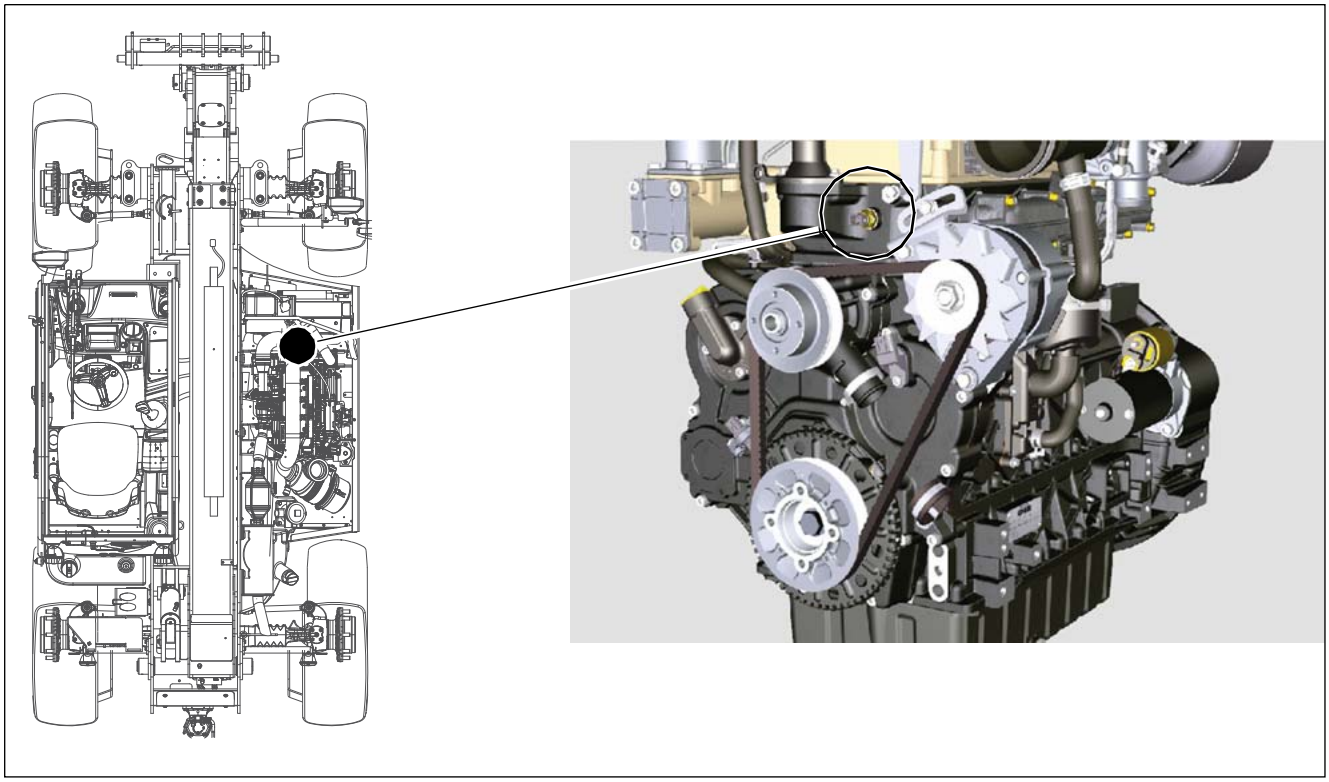

Temperature sensor B007 – hydraulic oil

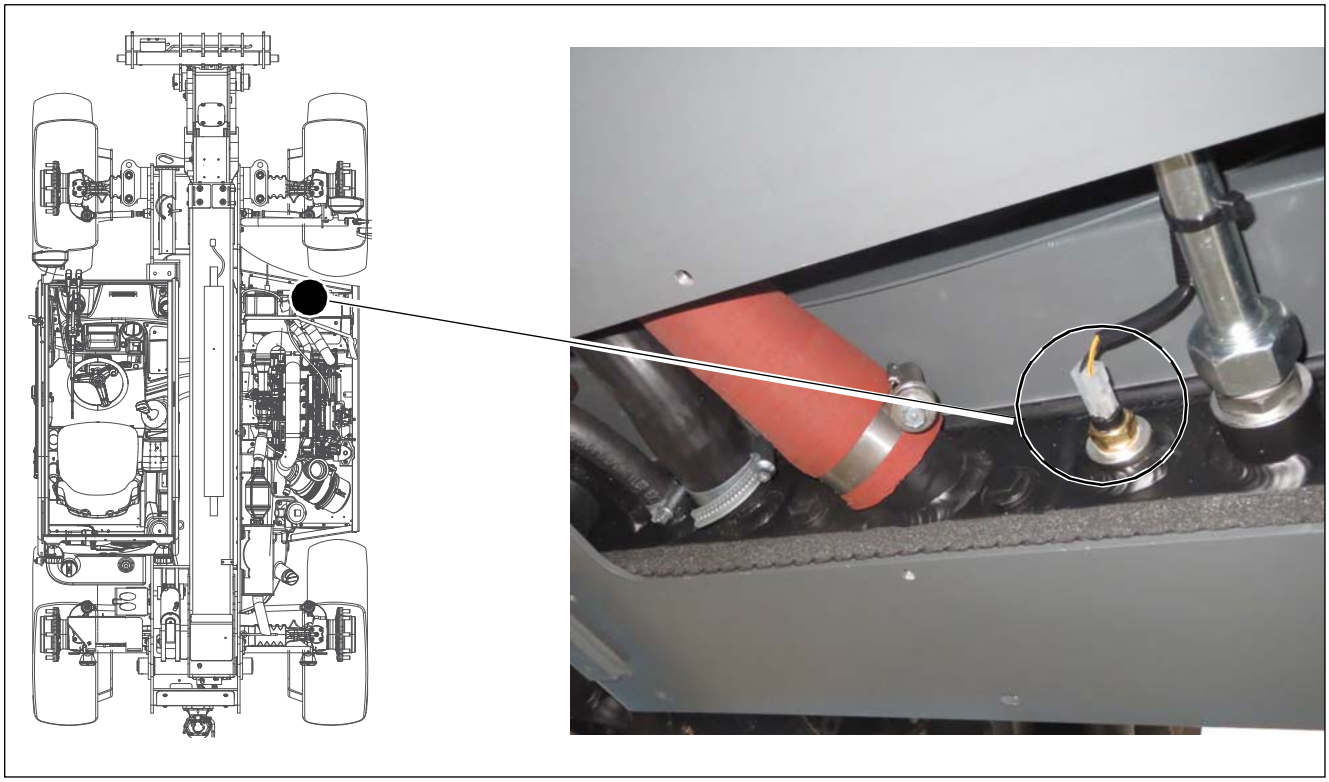

Load sensor B008 – strain gauges

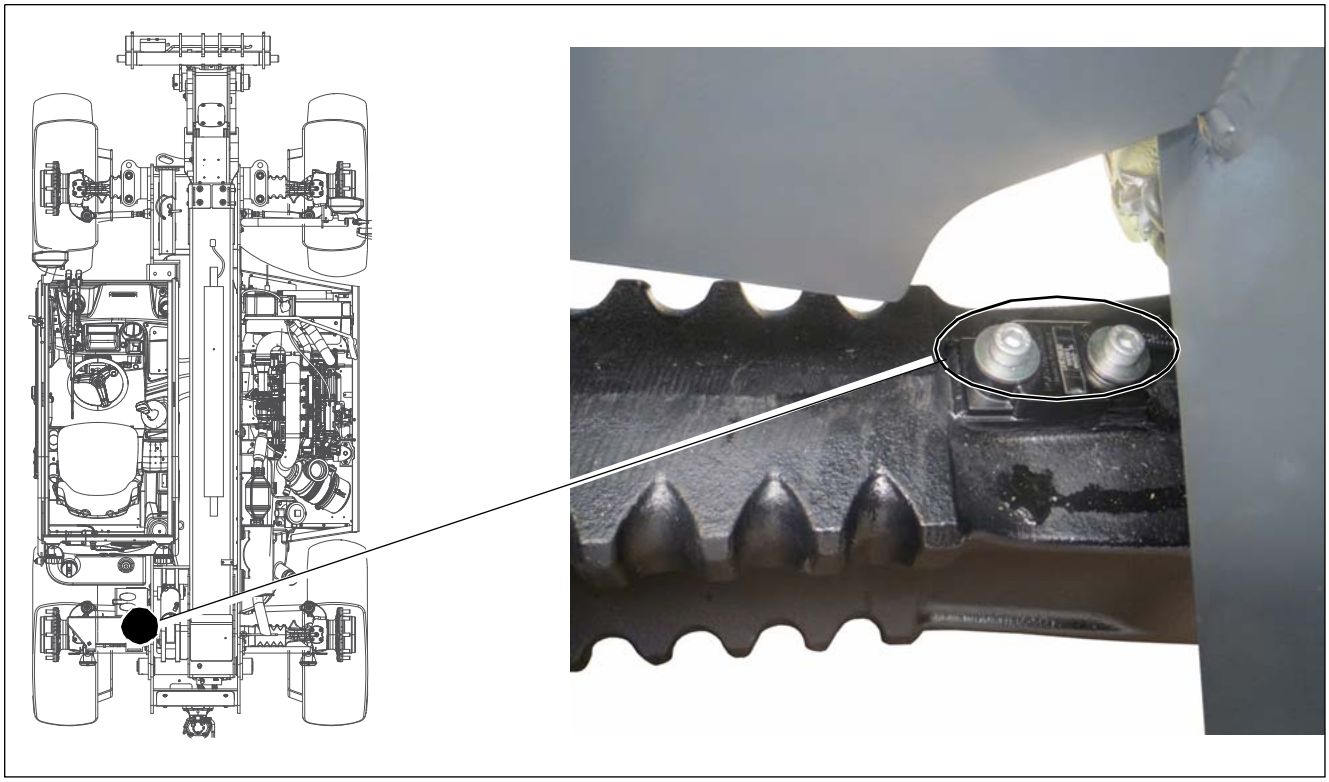

Speed sensor B009 – variable displacement motor

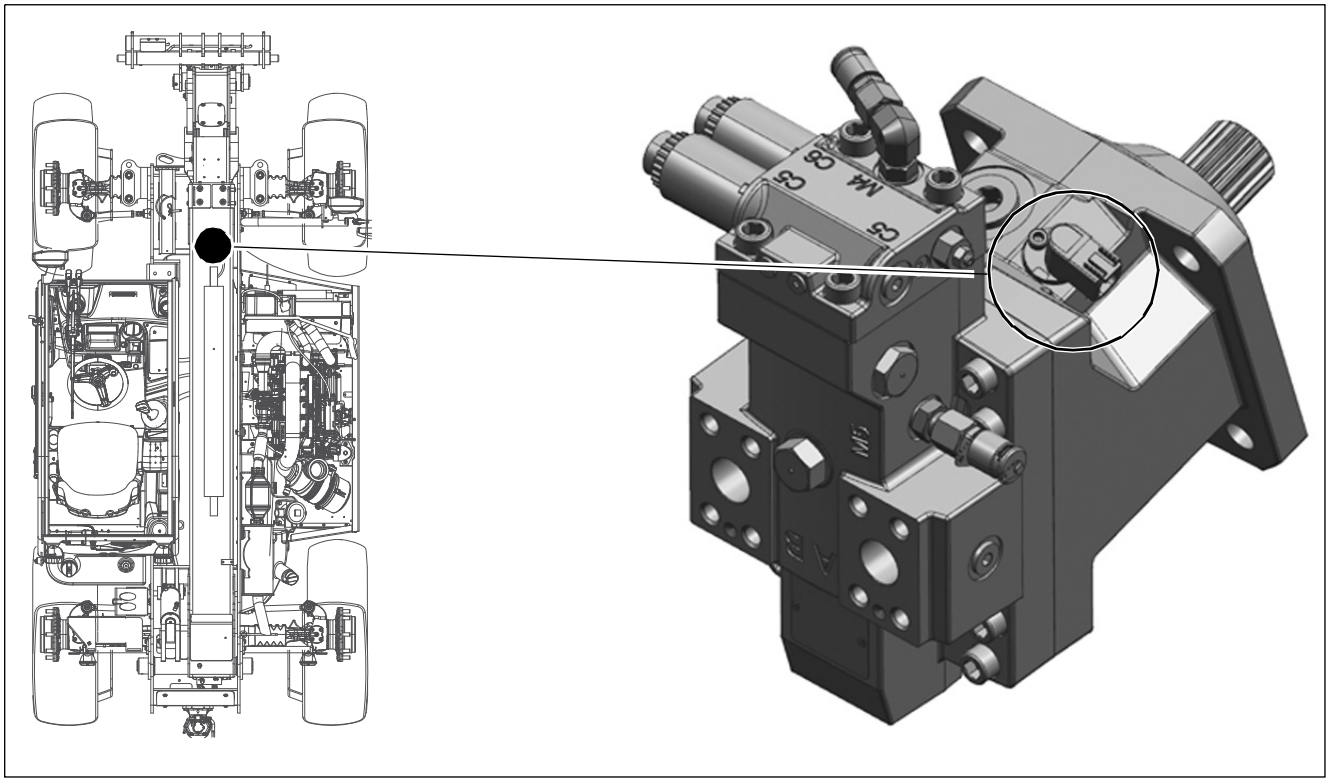

Speed sensor B010 – Hydraulic pump

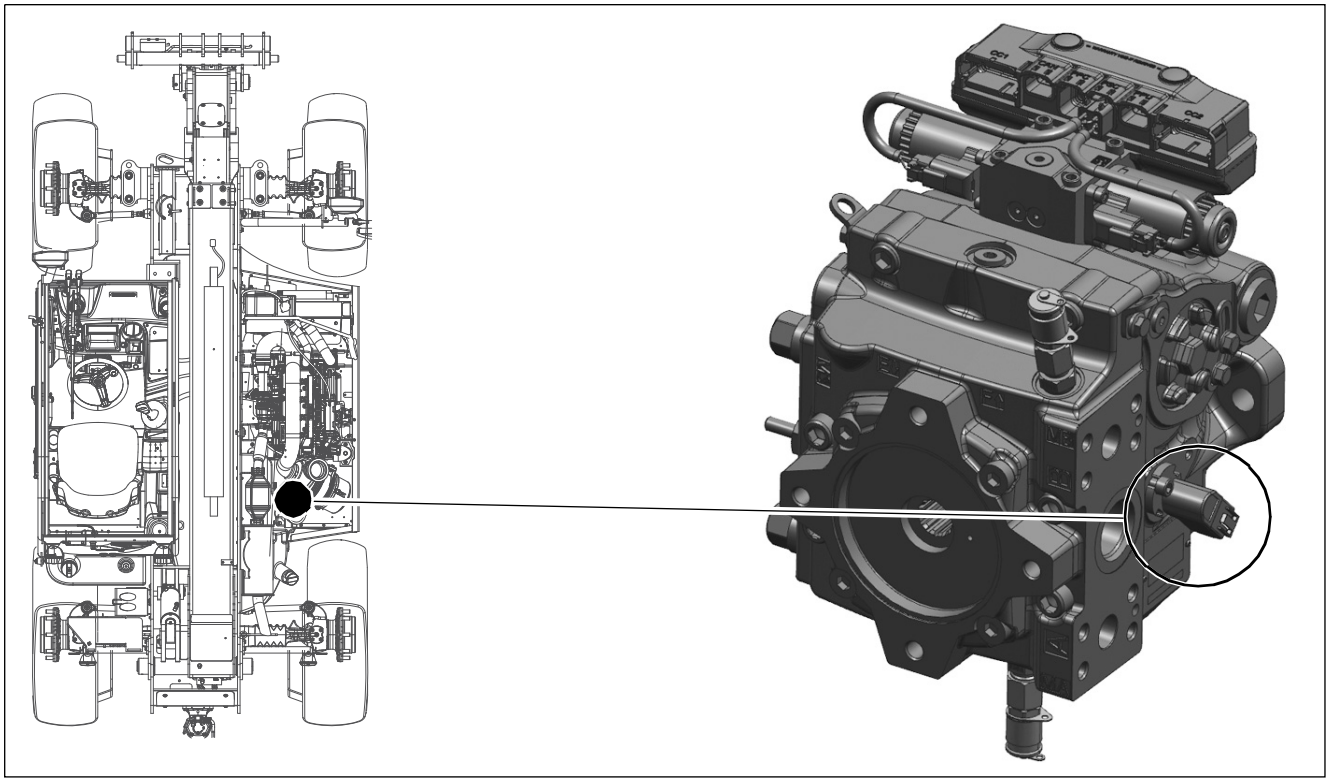

Coolant level sensor B015

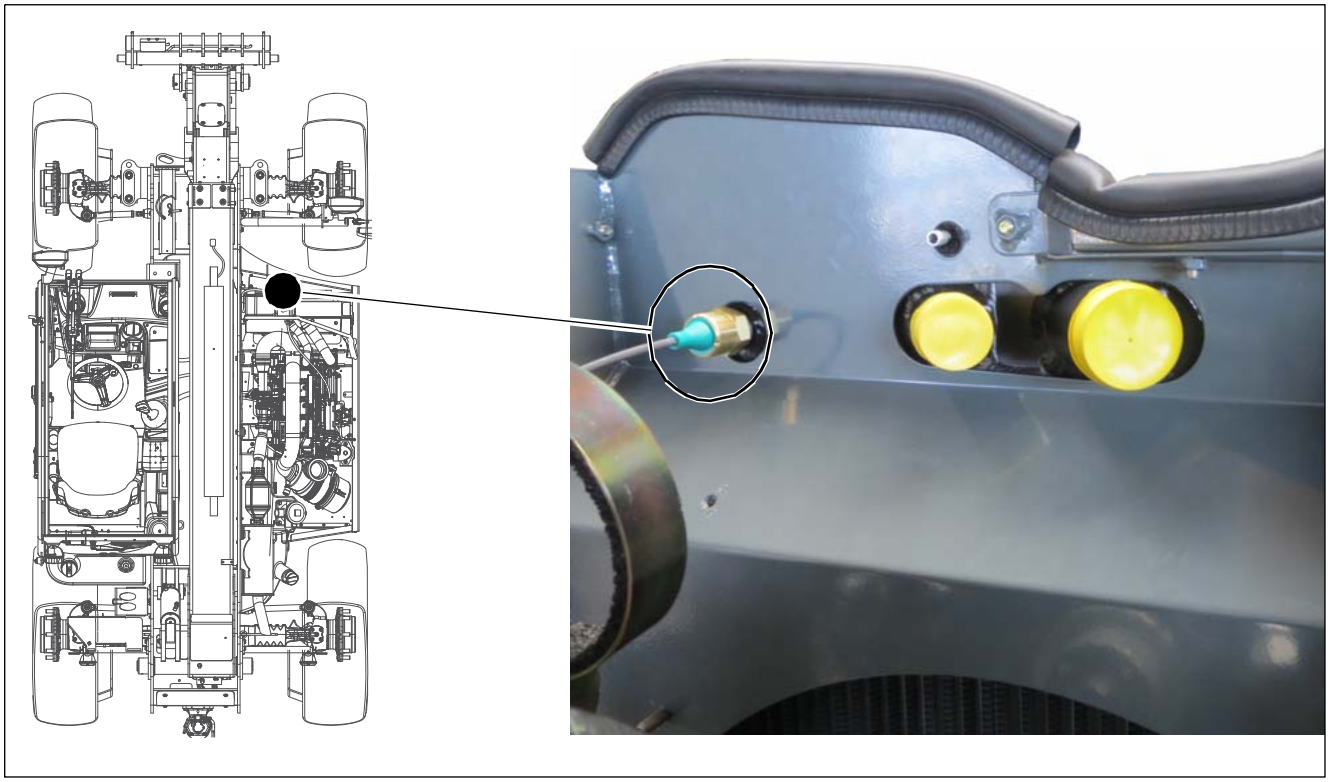

Position transducer B028 – bucket repositioning

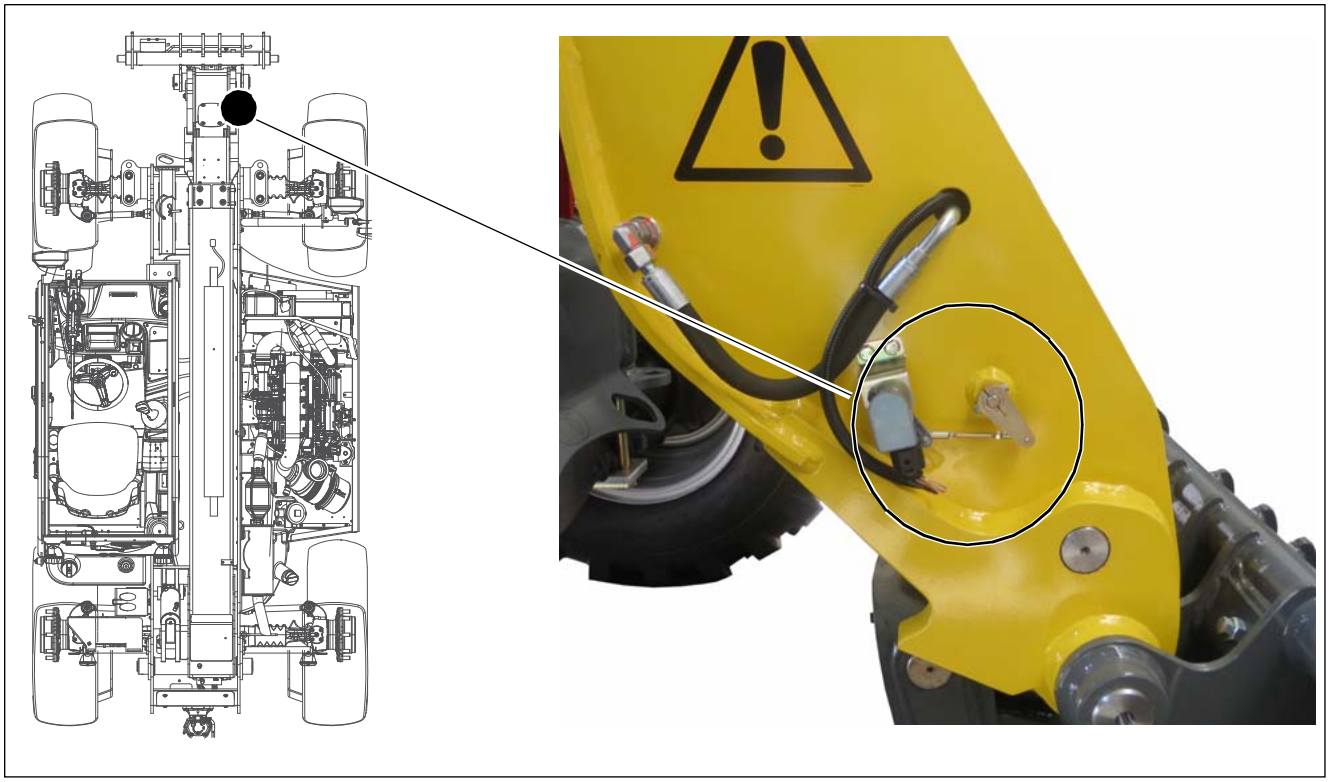

Joystick D002

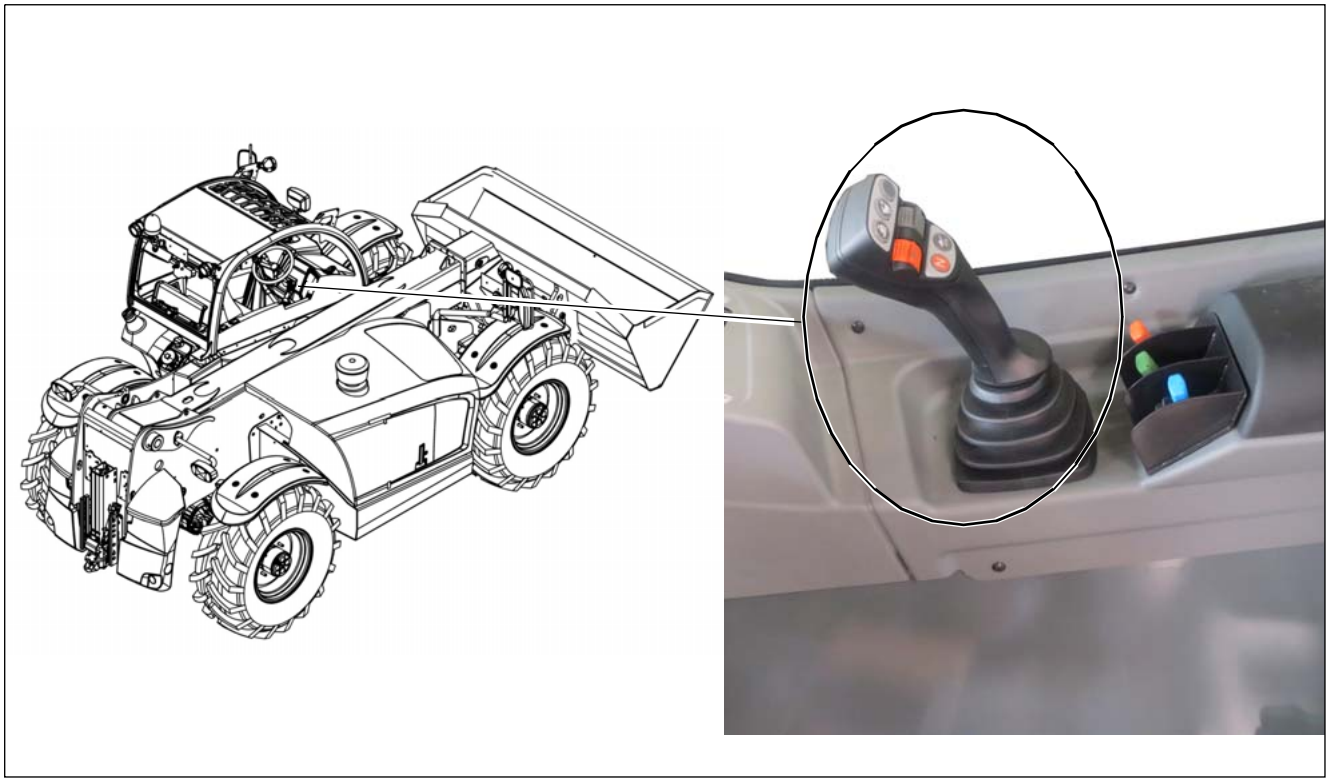

Generator G001

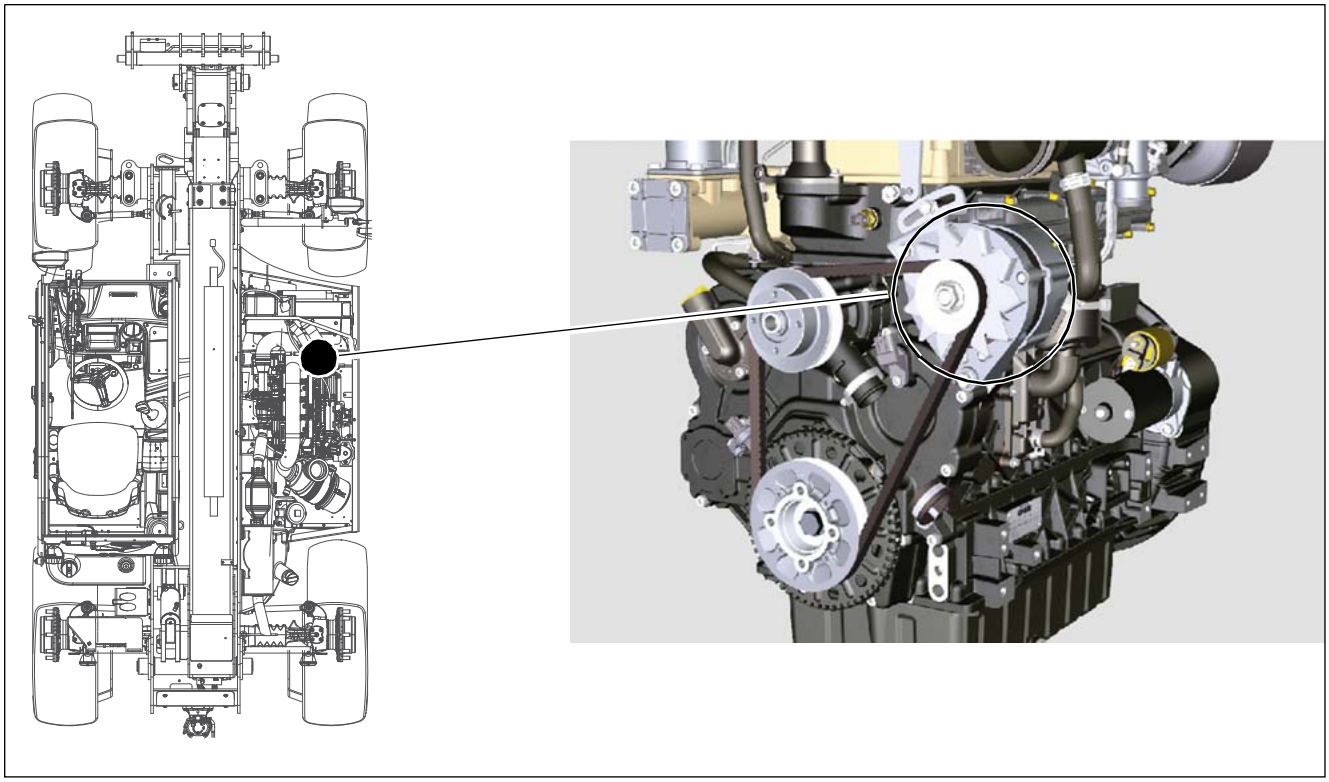

Starter M001

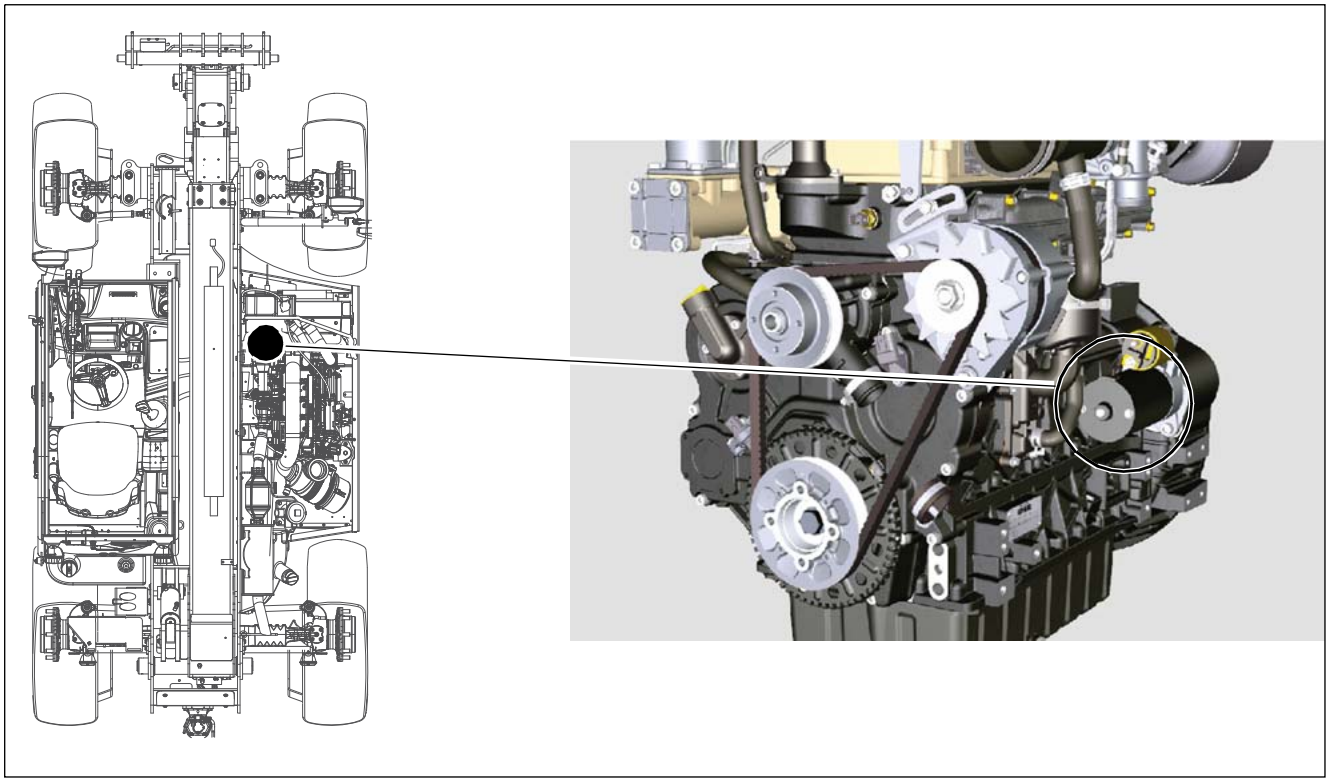

Wiper motor M002 (front)

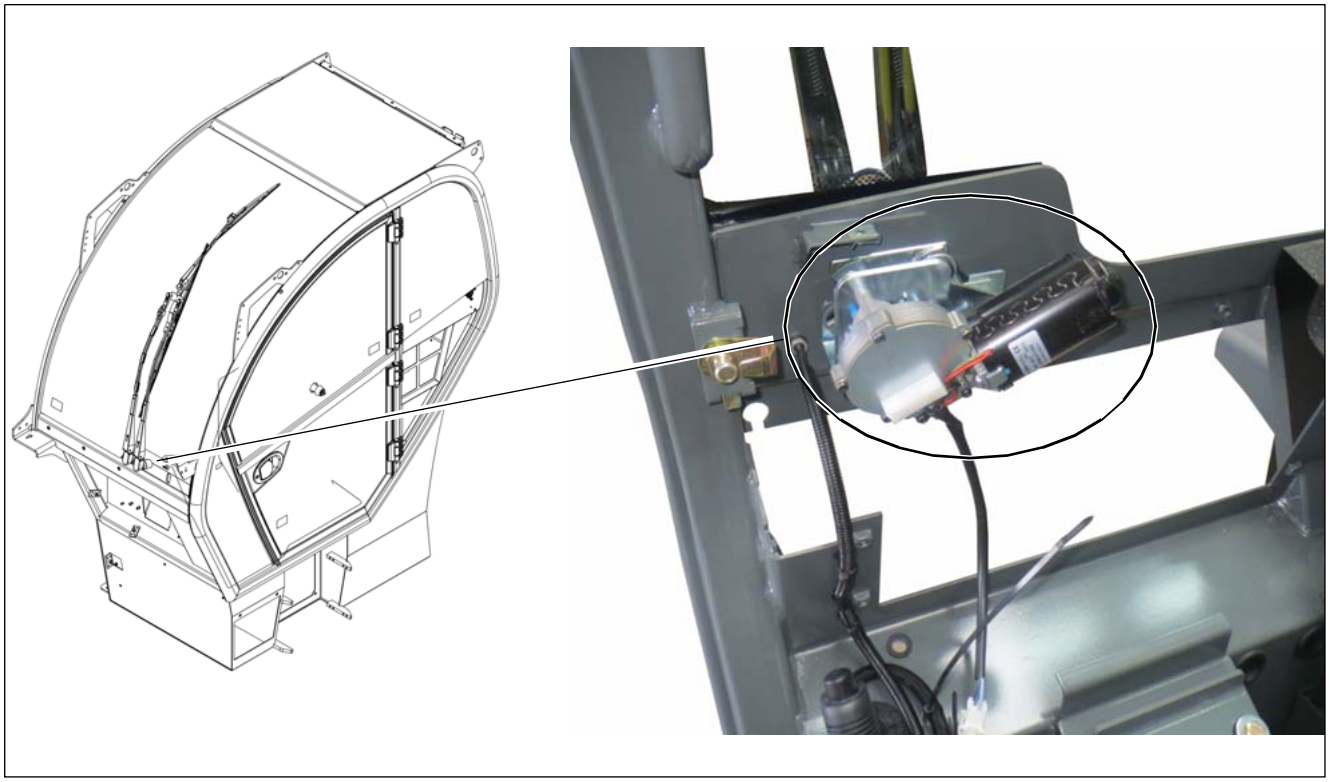

Wiper motor M003 (rear)

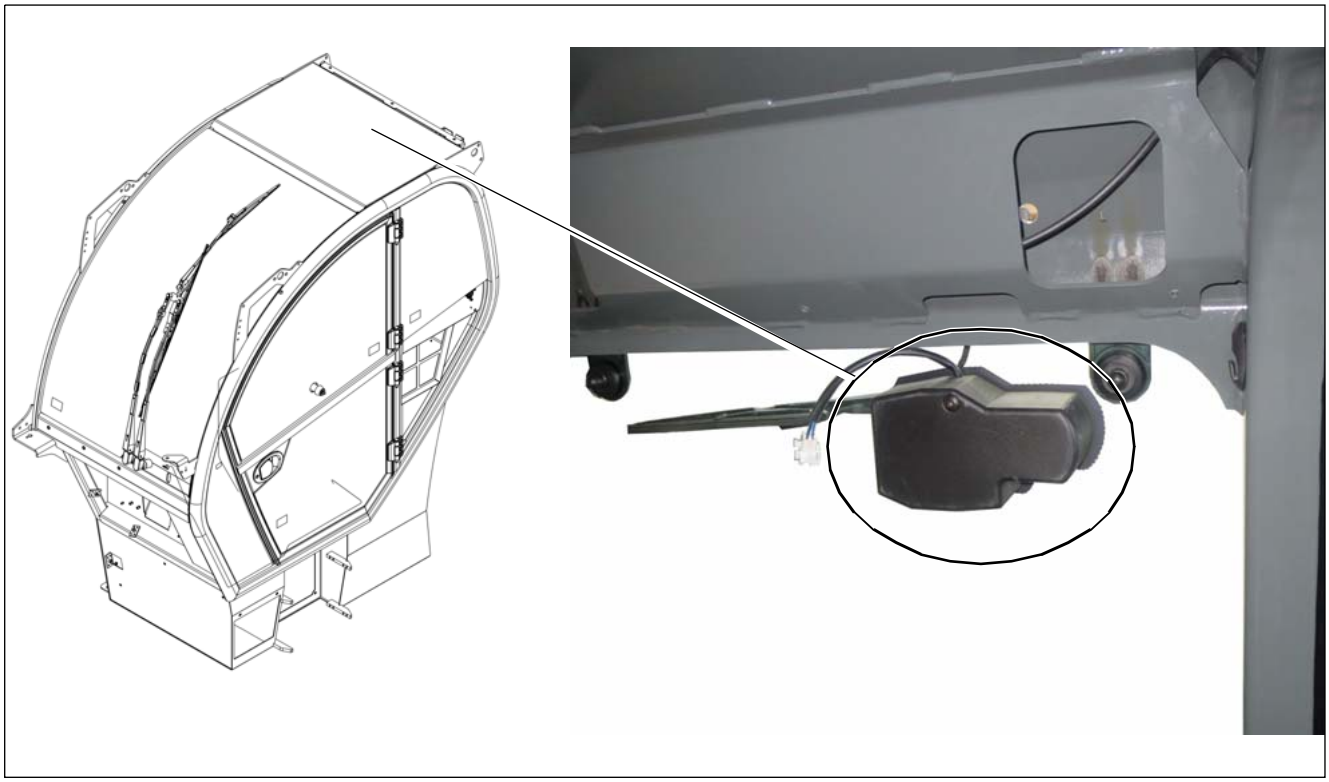

Traction electronics N001

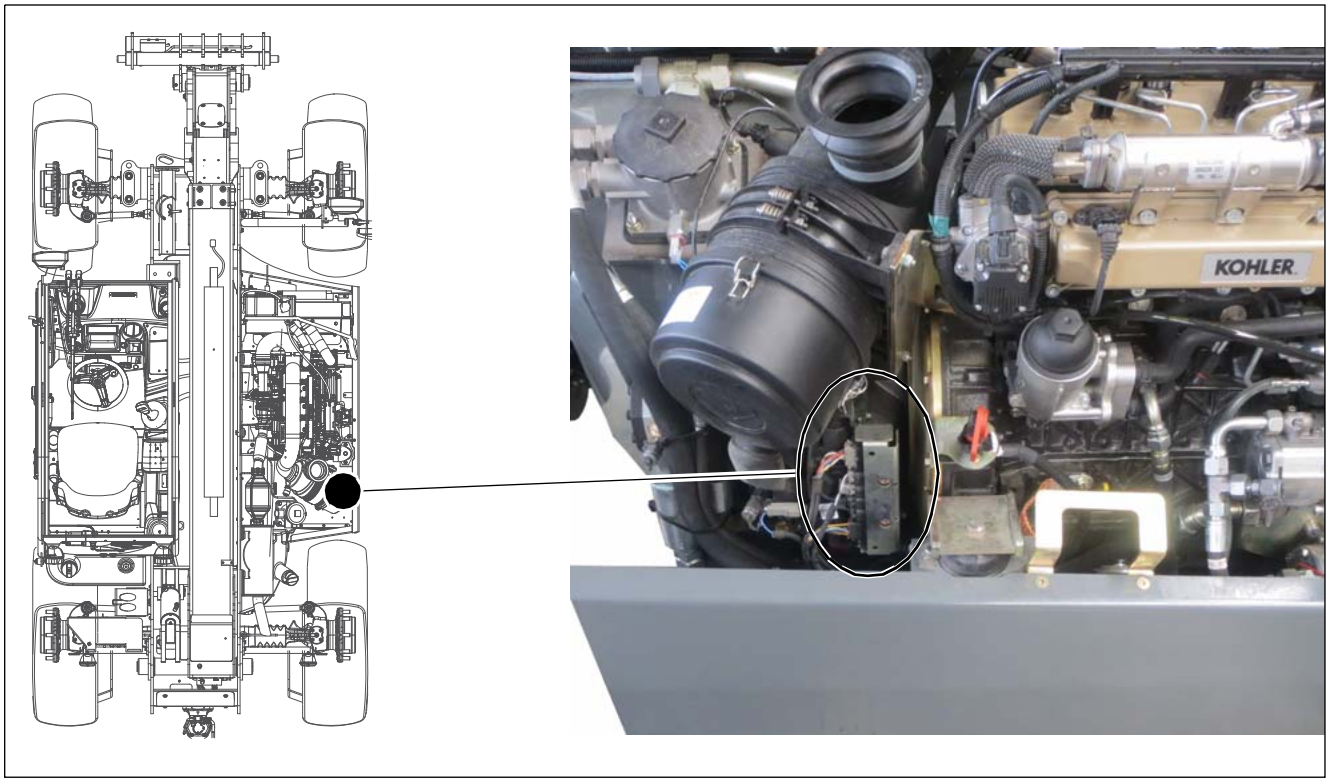

Controller N004/N015

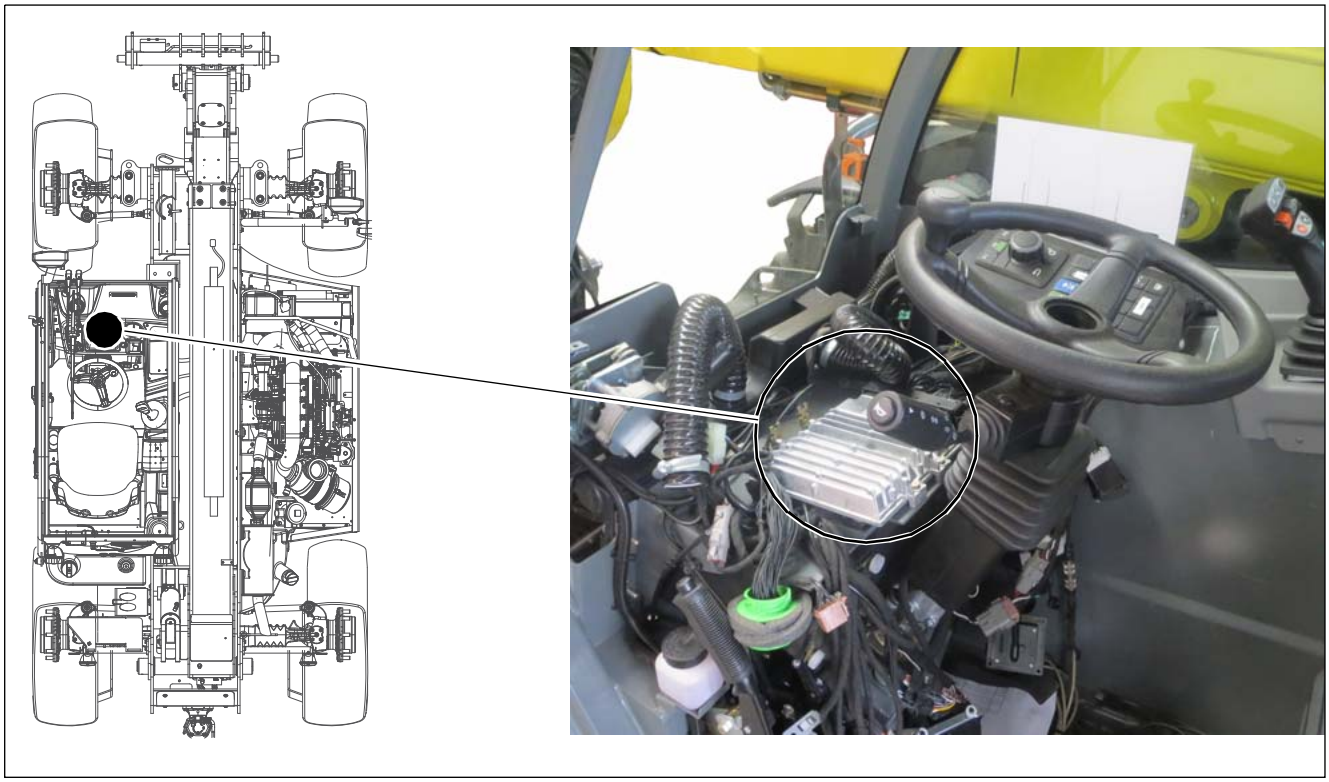

Diesel engine electronics N005

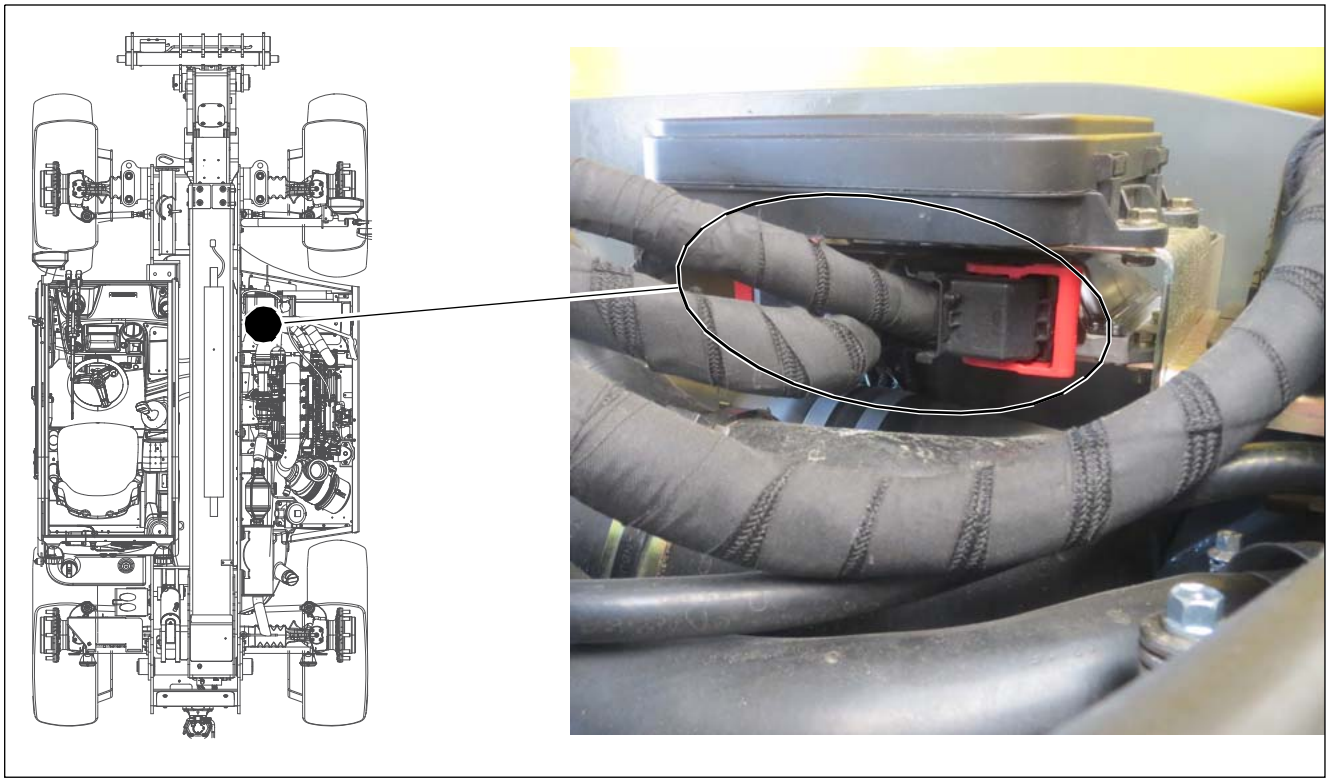

Fuse box N025

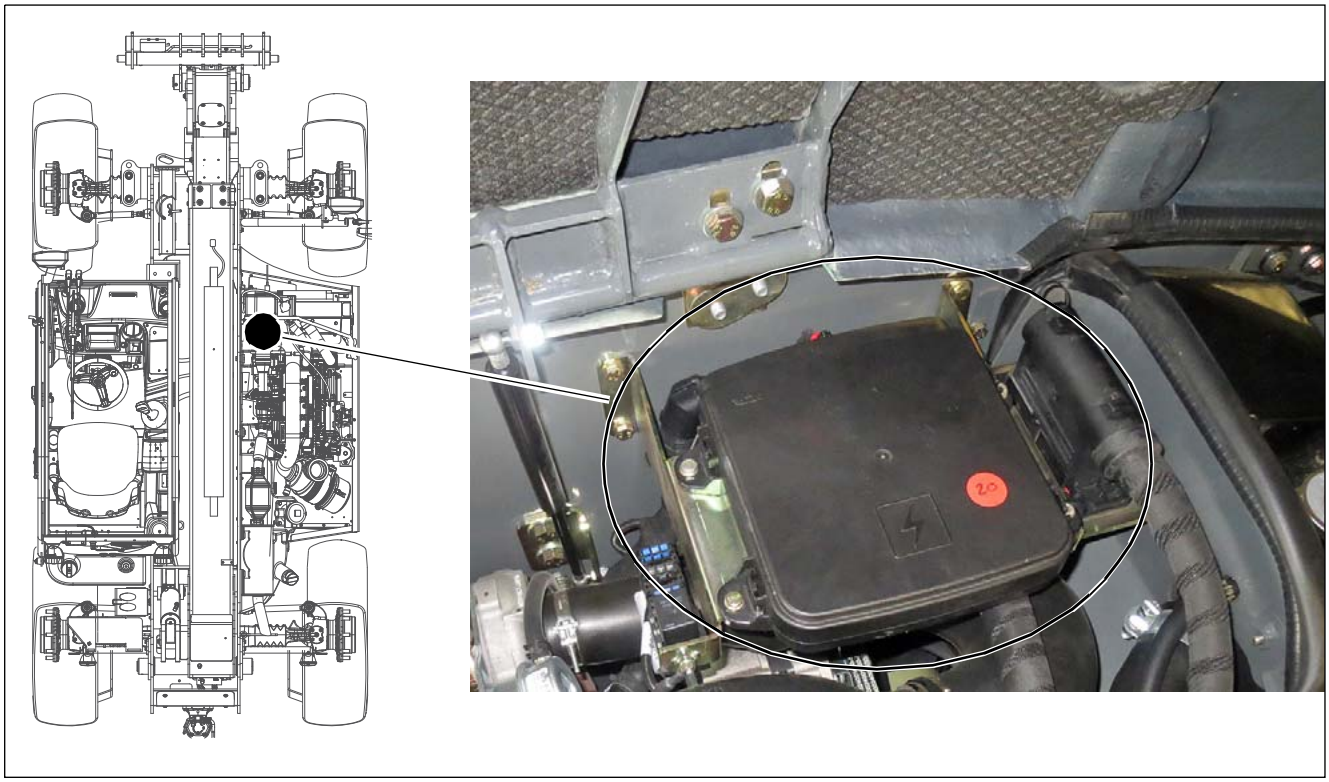

Motherboard N033

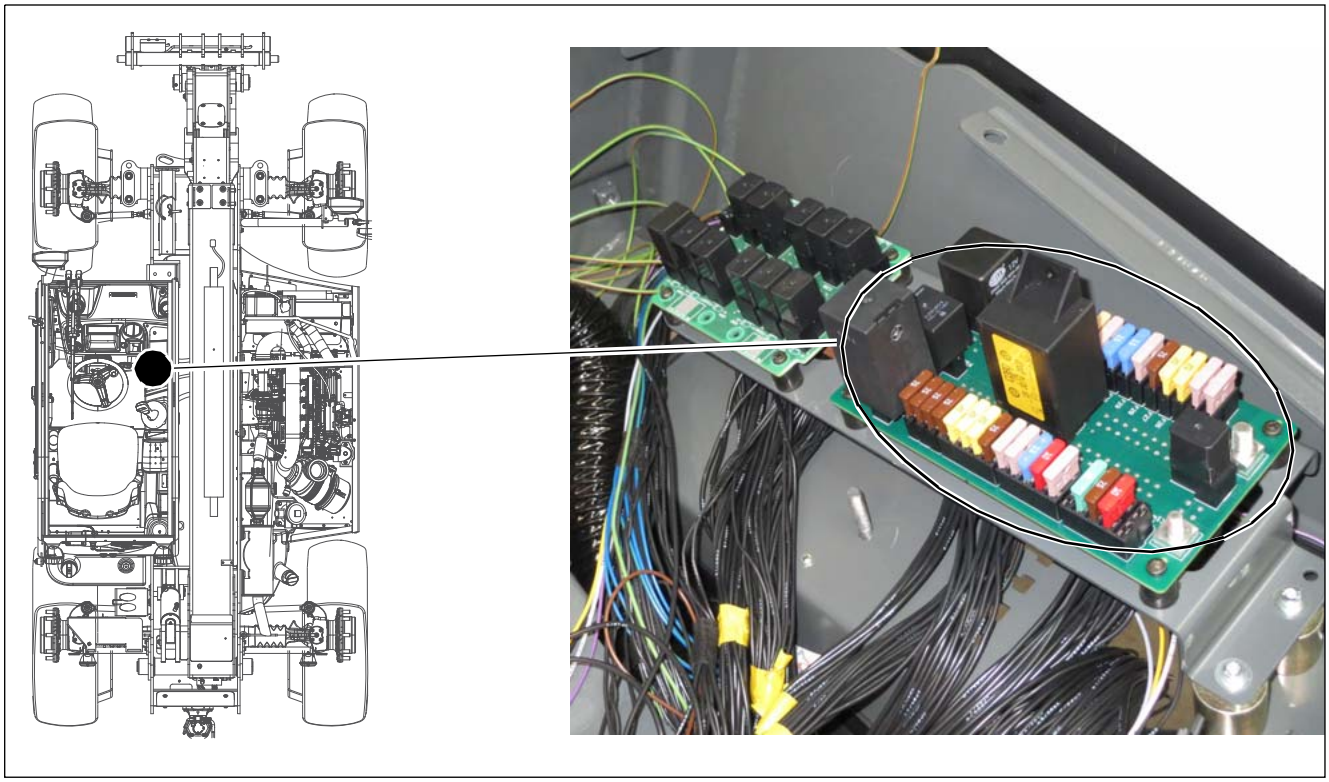

Printed circuit board N034

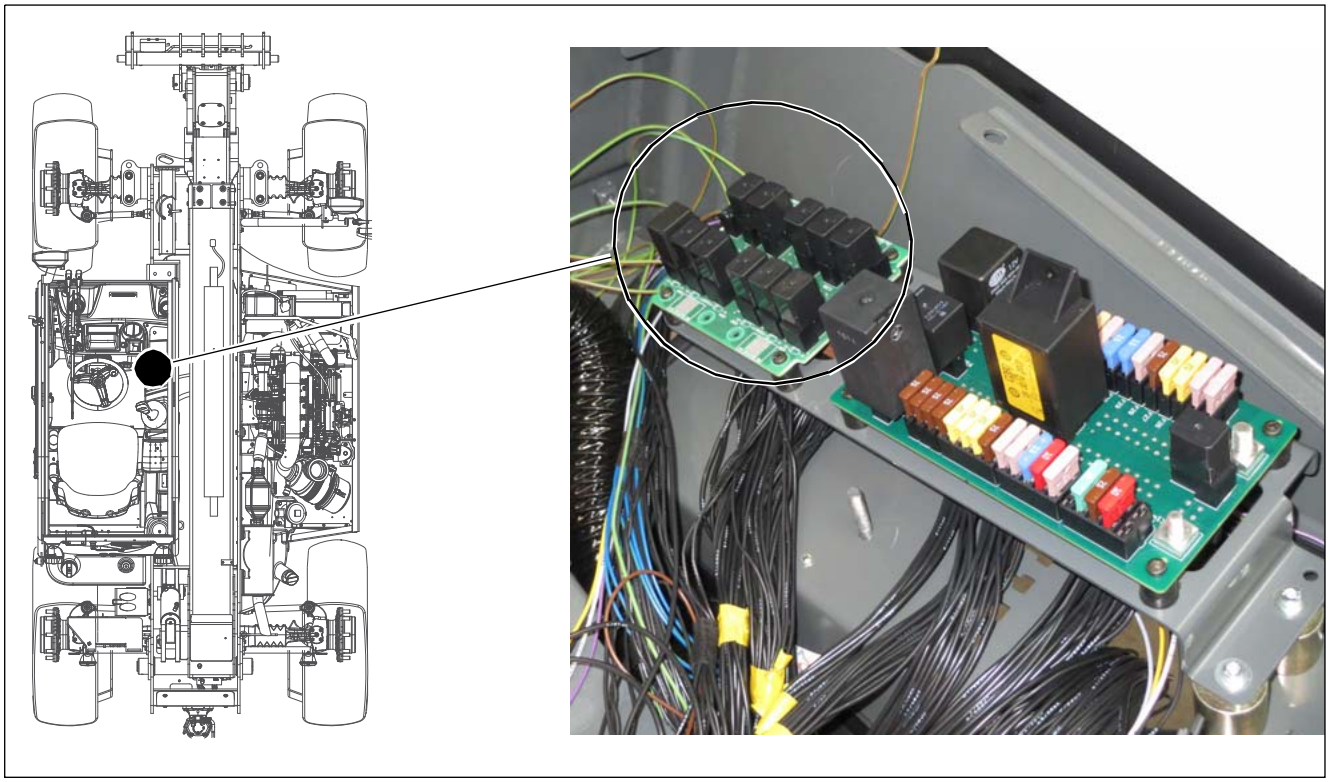

Angle of rotation sensor R002 – inching

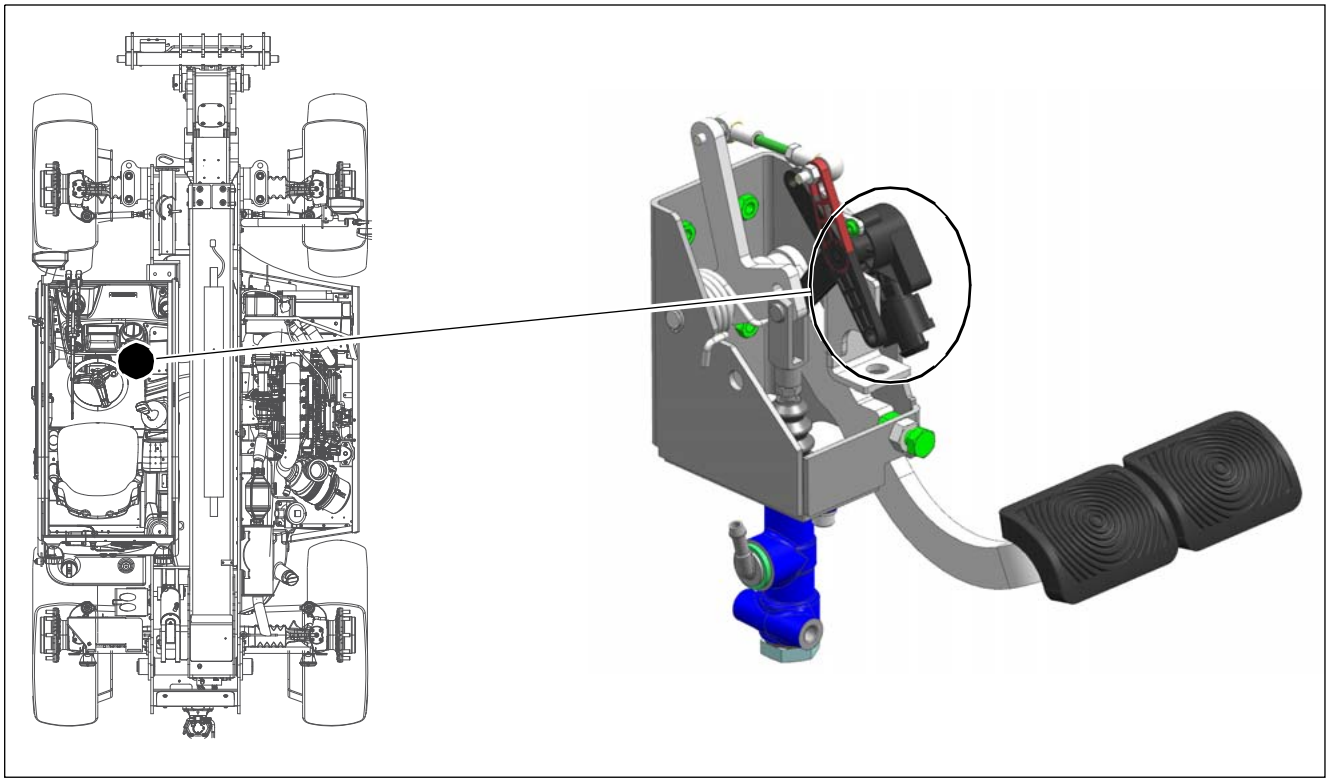

Kriegang potentiometer R003

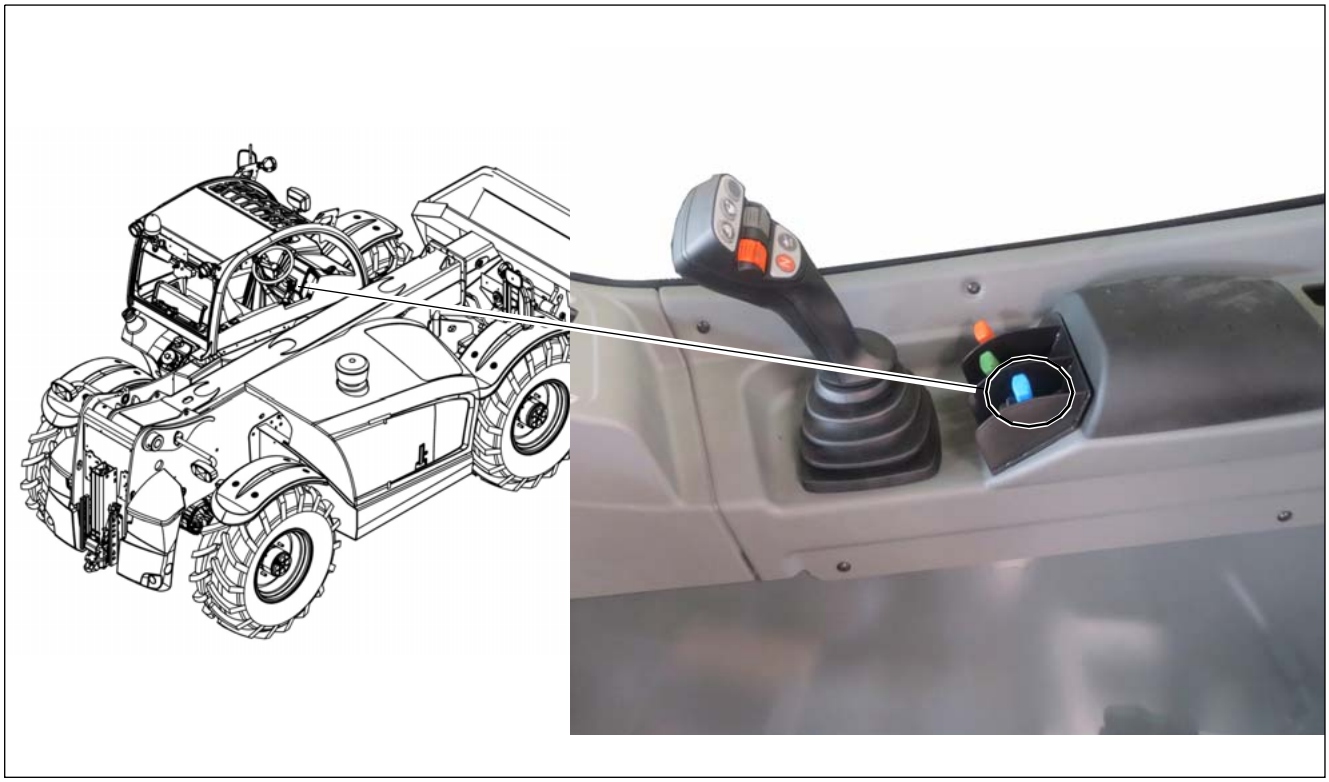

Angle of rotation sensor R023 – lifting arm

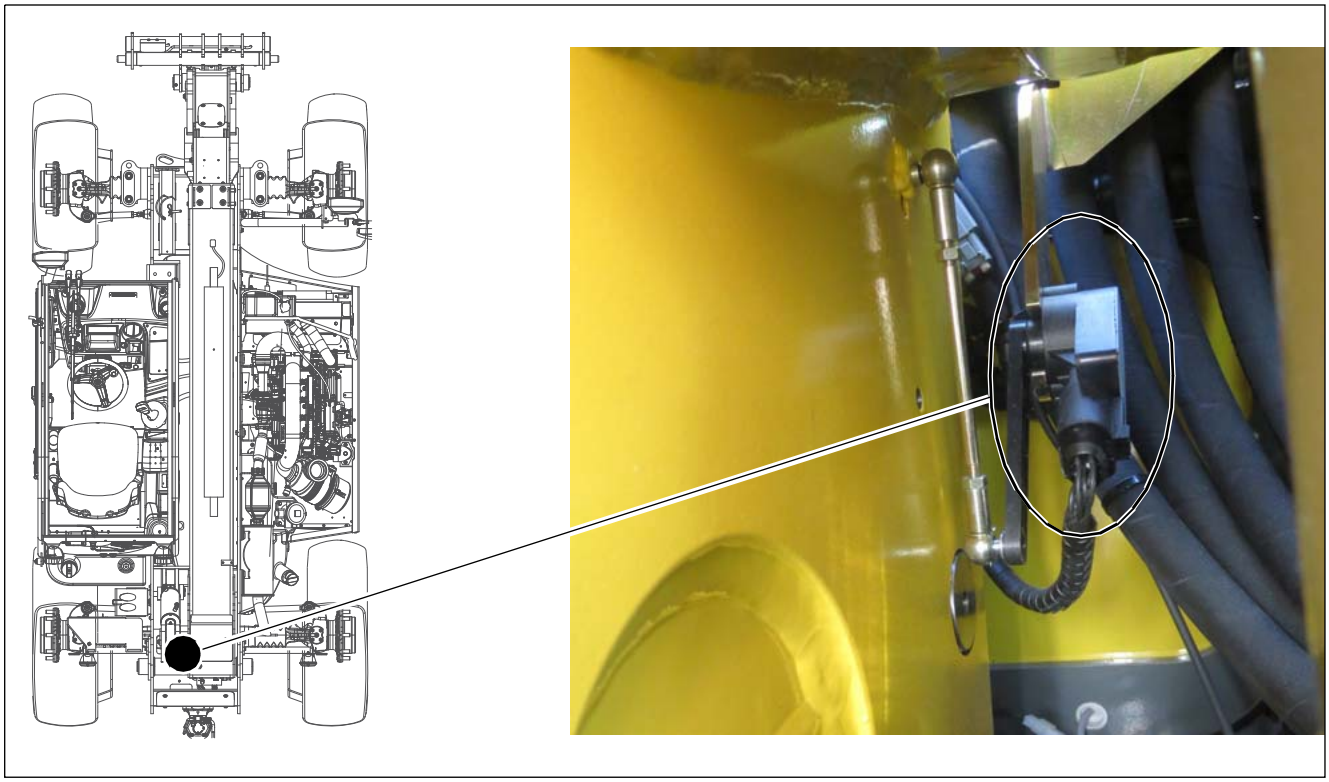

Push button switch S004 – air filter

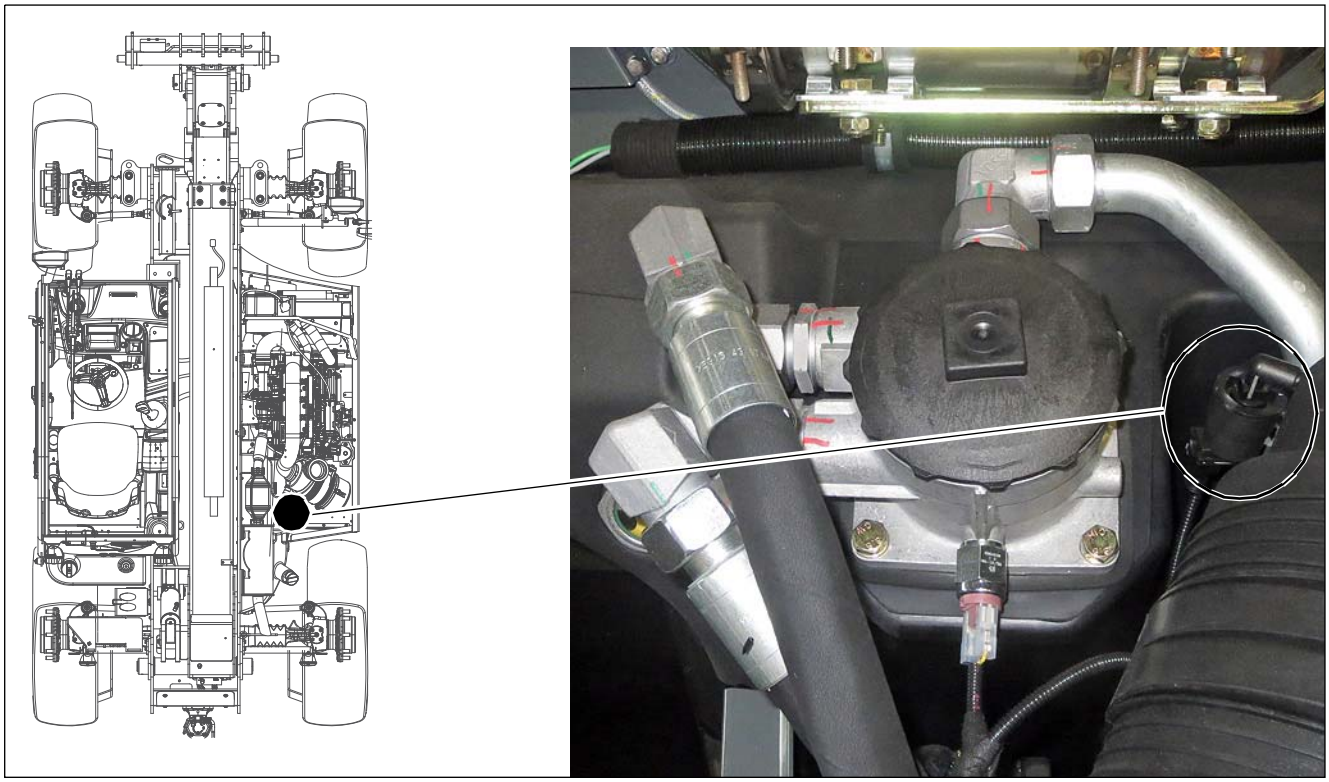

Push button switch S005 – hydraulics

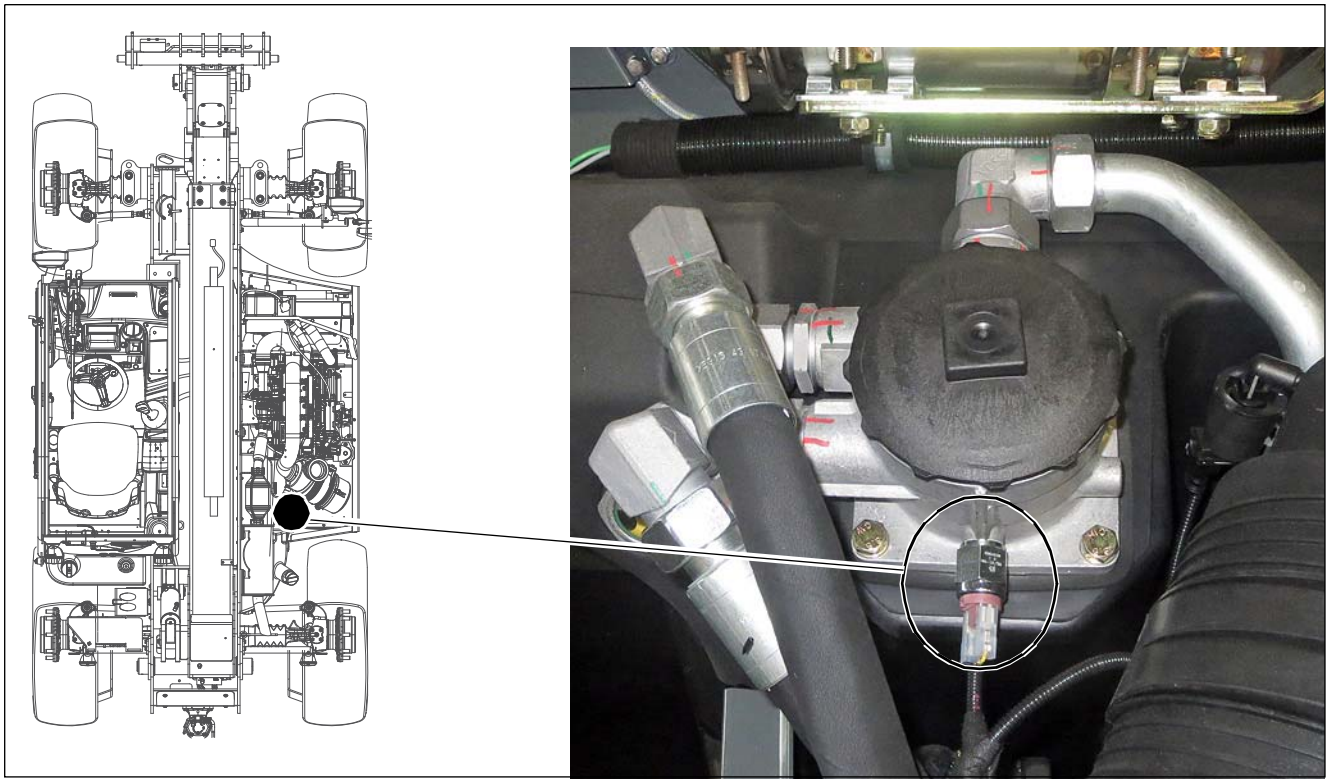

Push button switch S011 – parking brake

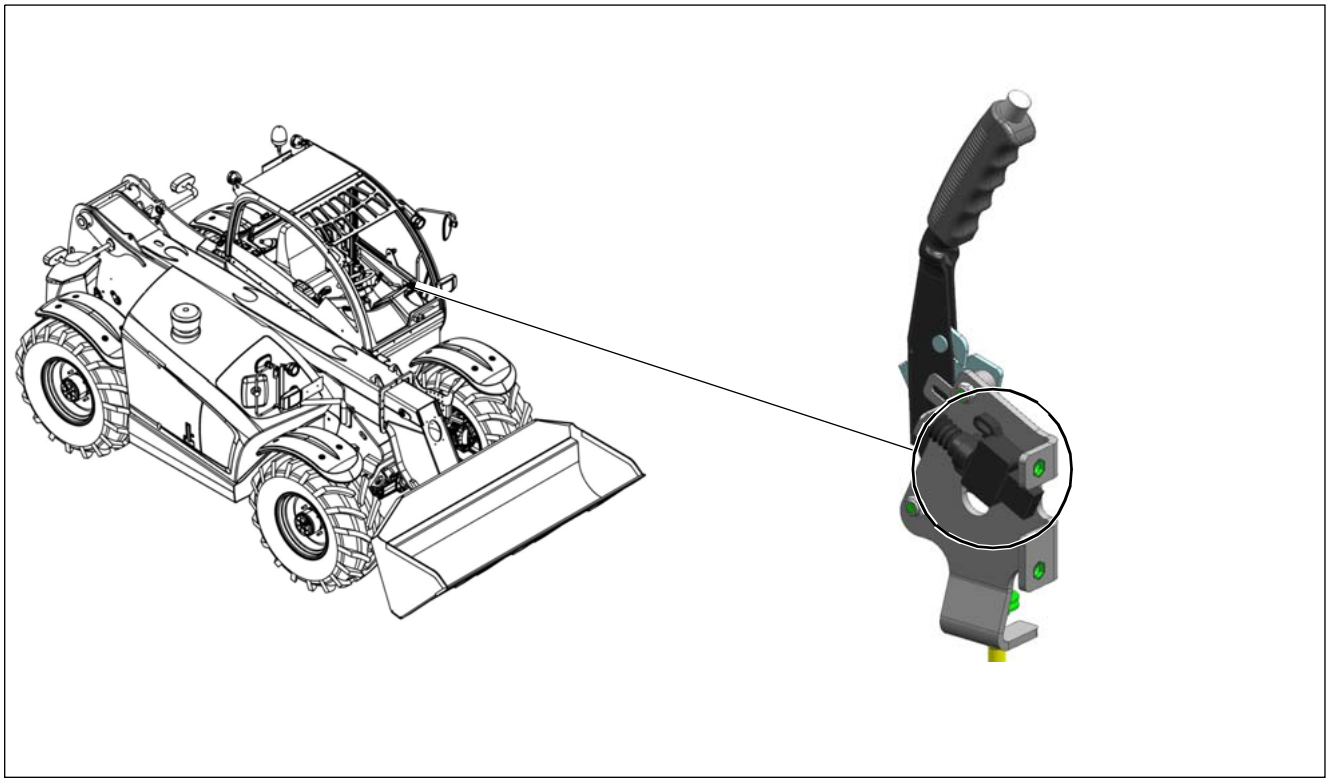

Push button switch S045 – load stabiliser

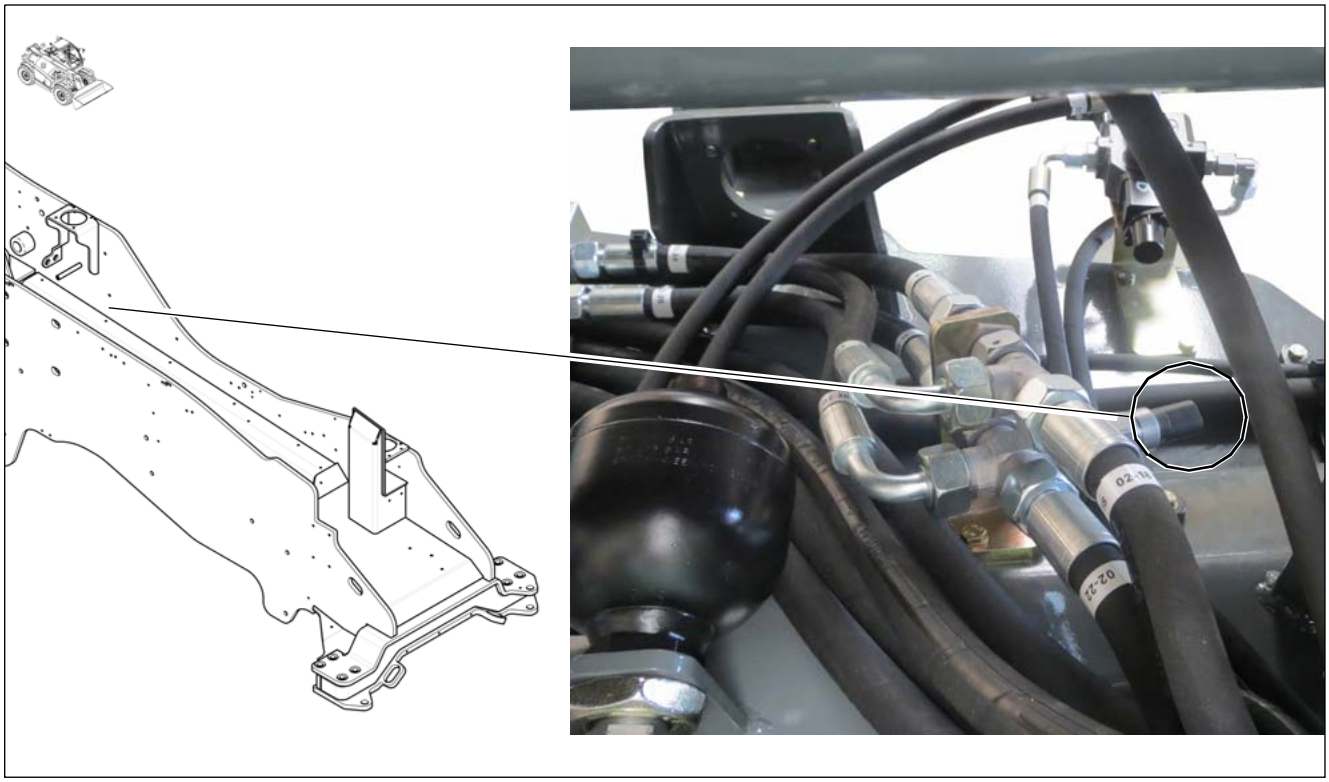

Push button switch S052 – air-conditioning system

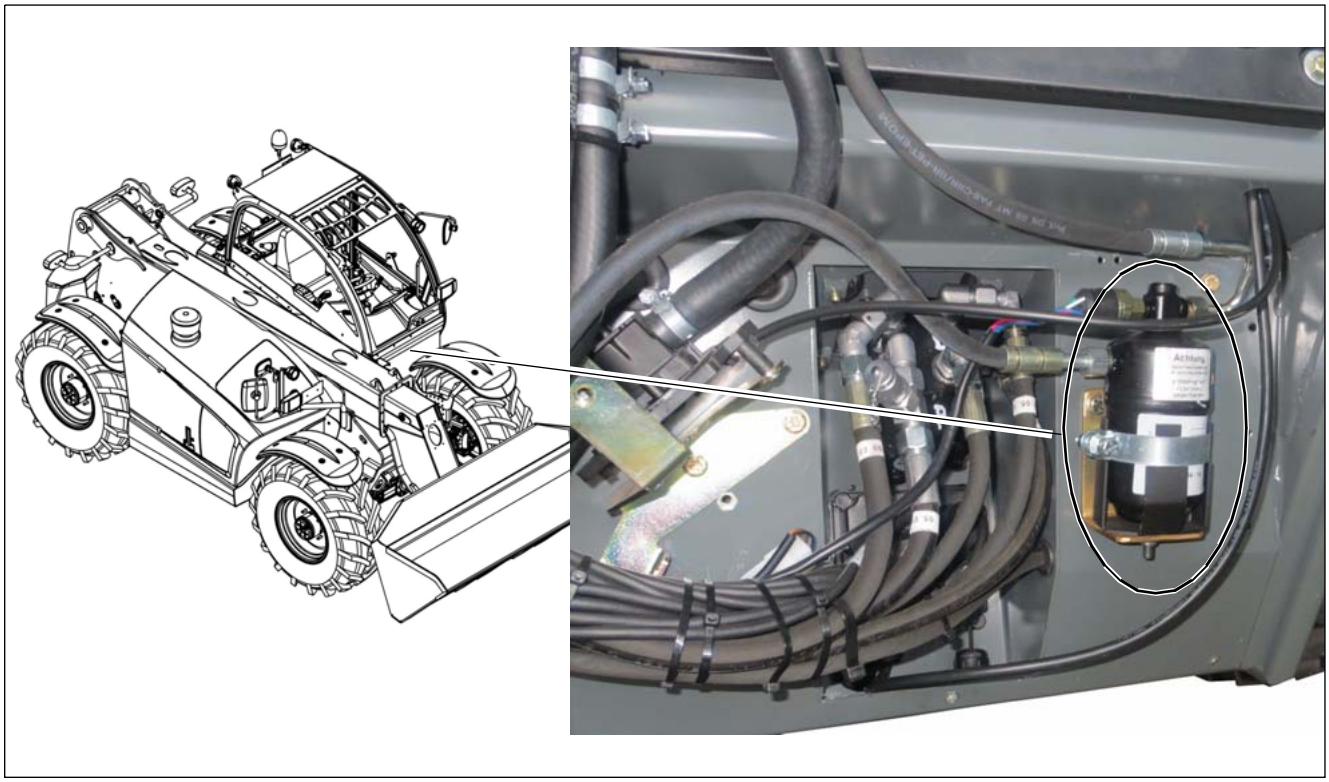

Limit switch S116 – telescopic arm

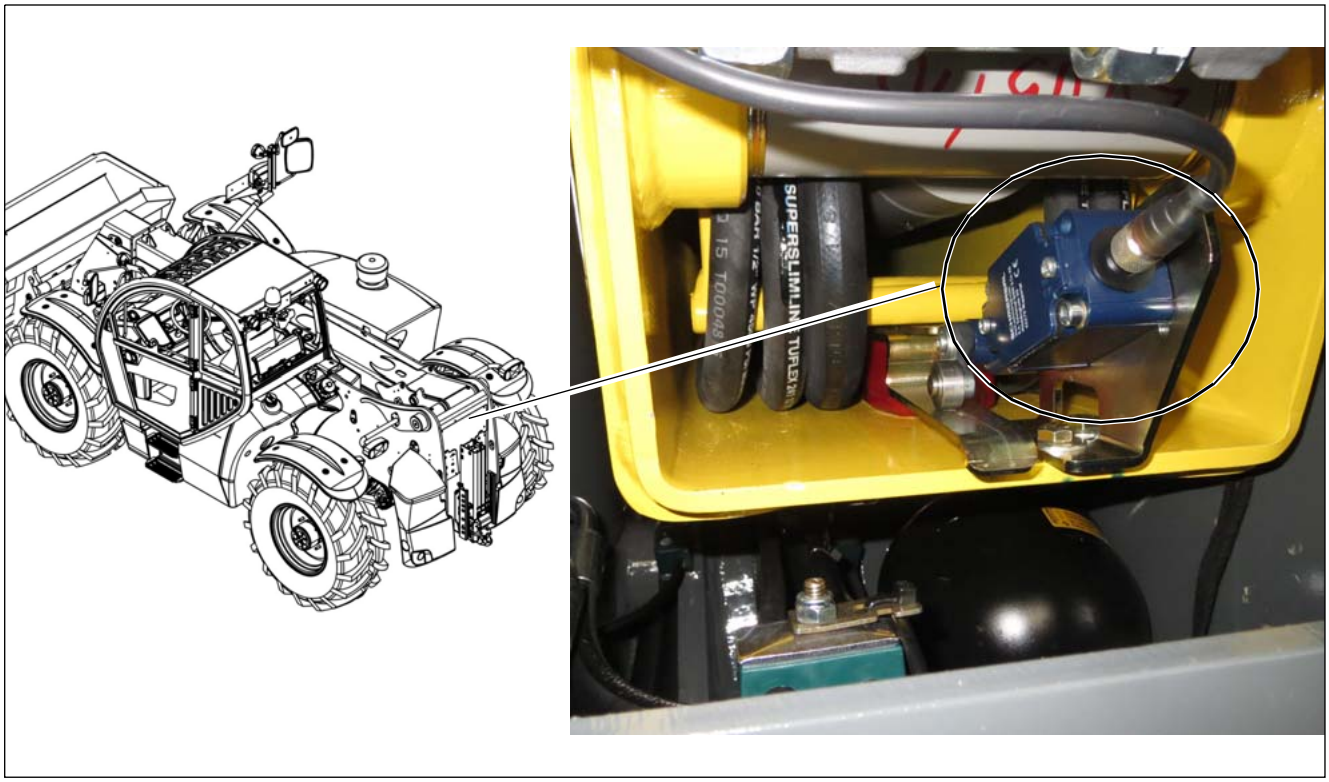

Touch button S127 – pressure release

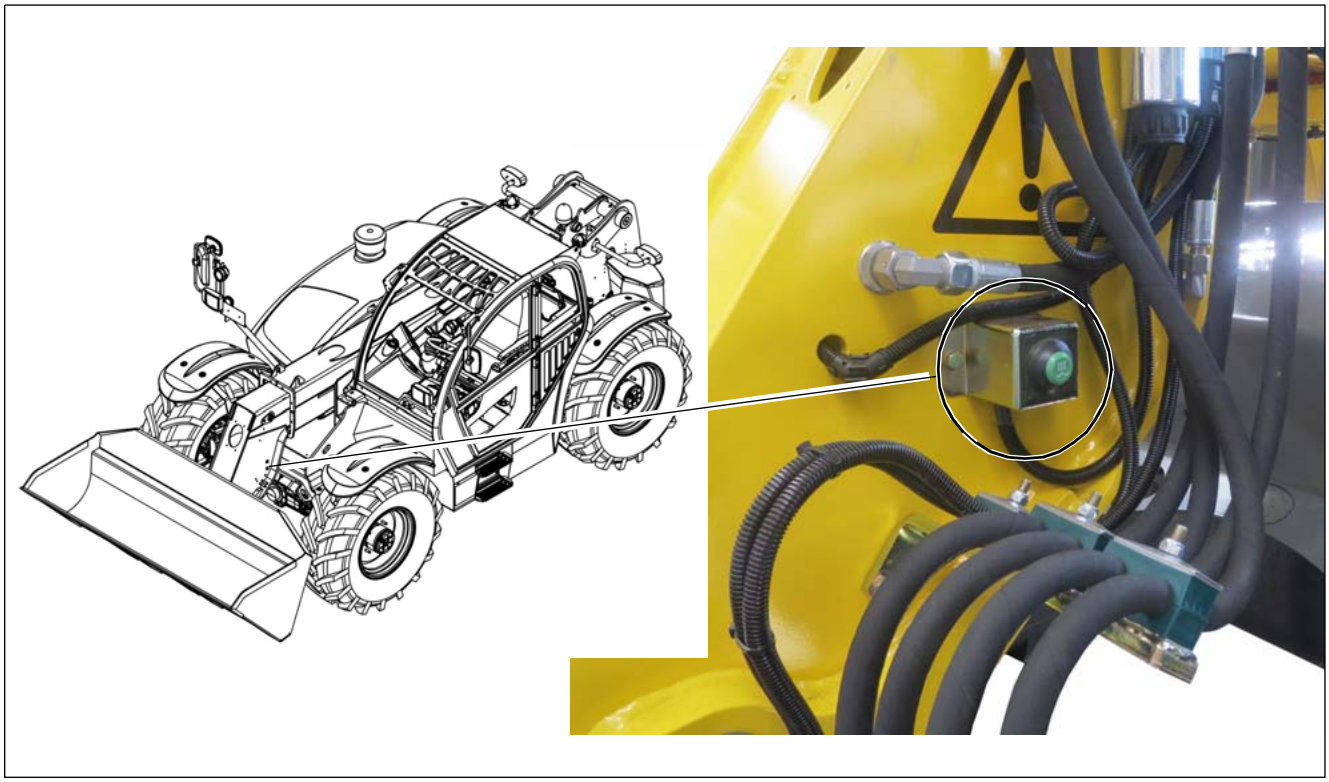

Limit switch S172 – crab steering mode lever

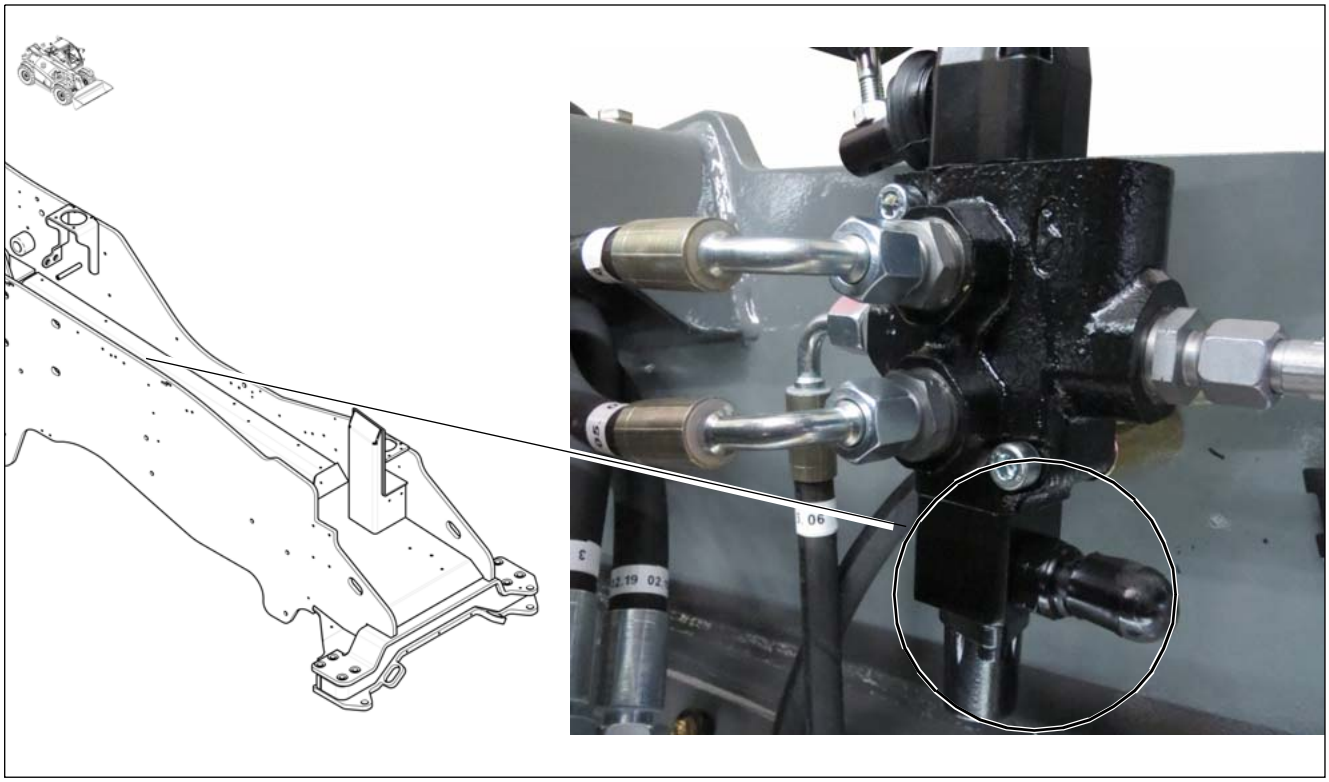

Solenoid coupling Y031 – climate compressor

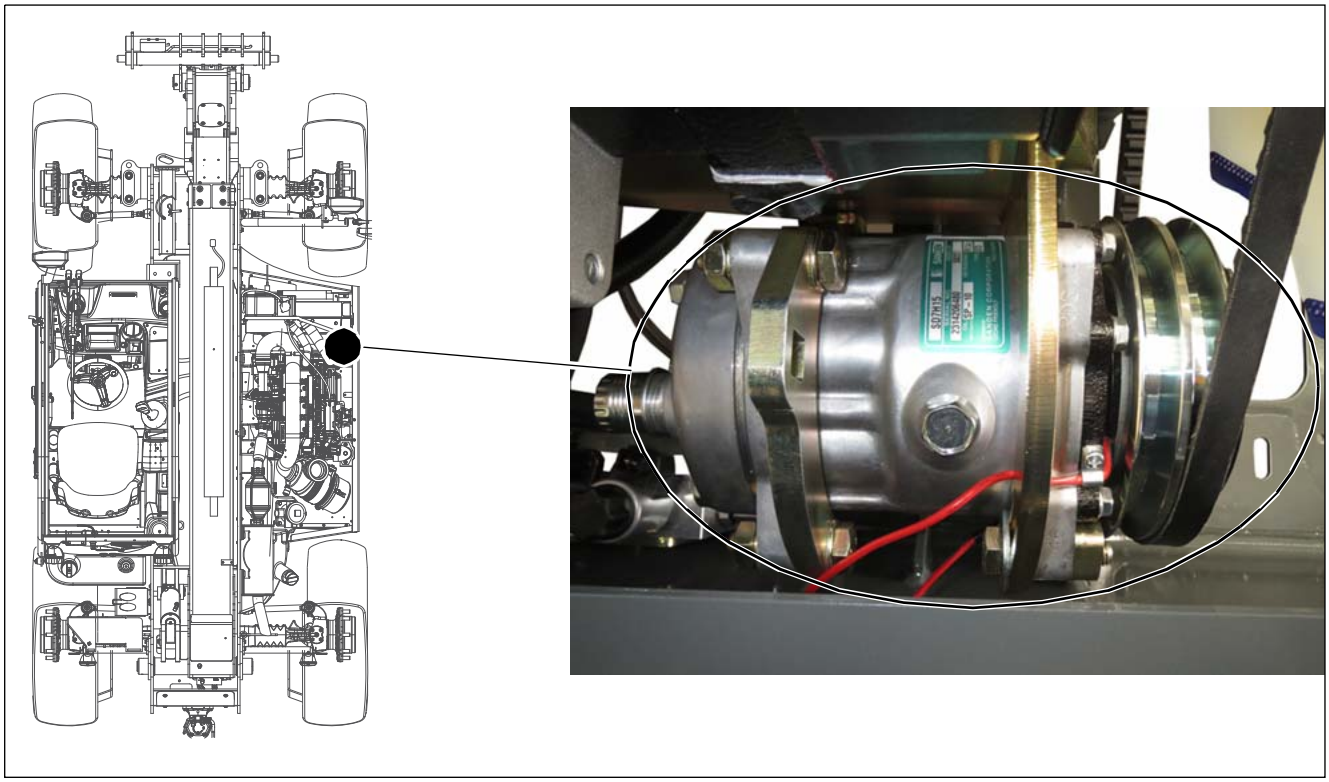

Camera (front) B087

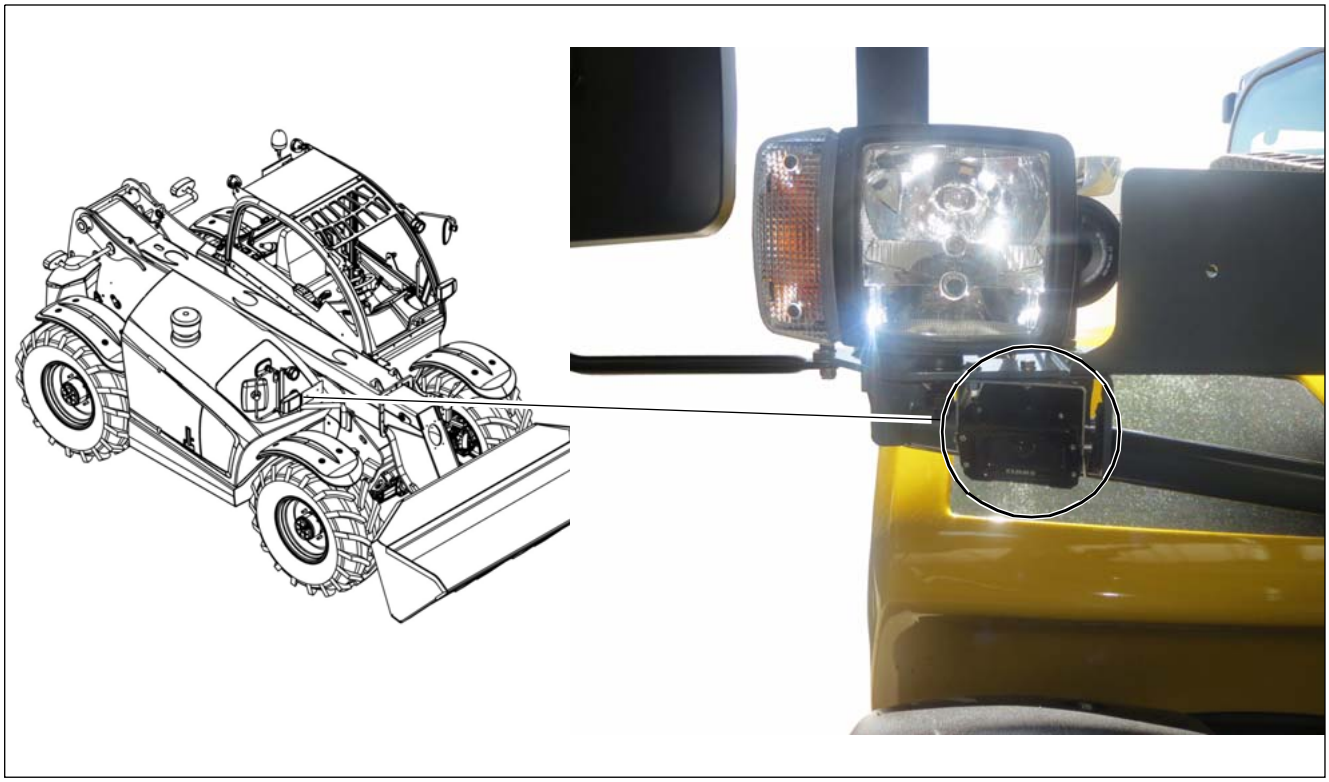

Camera (rear) B088

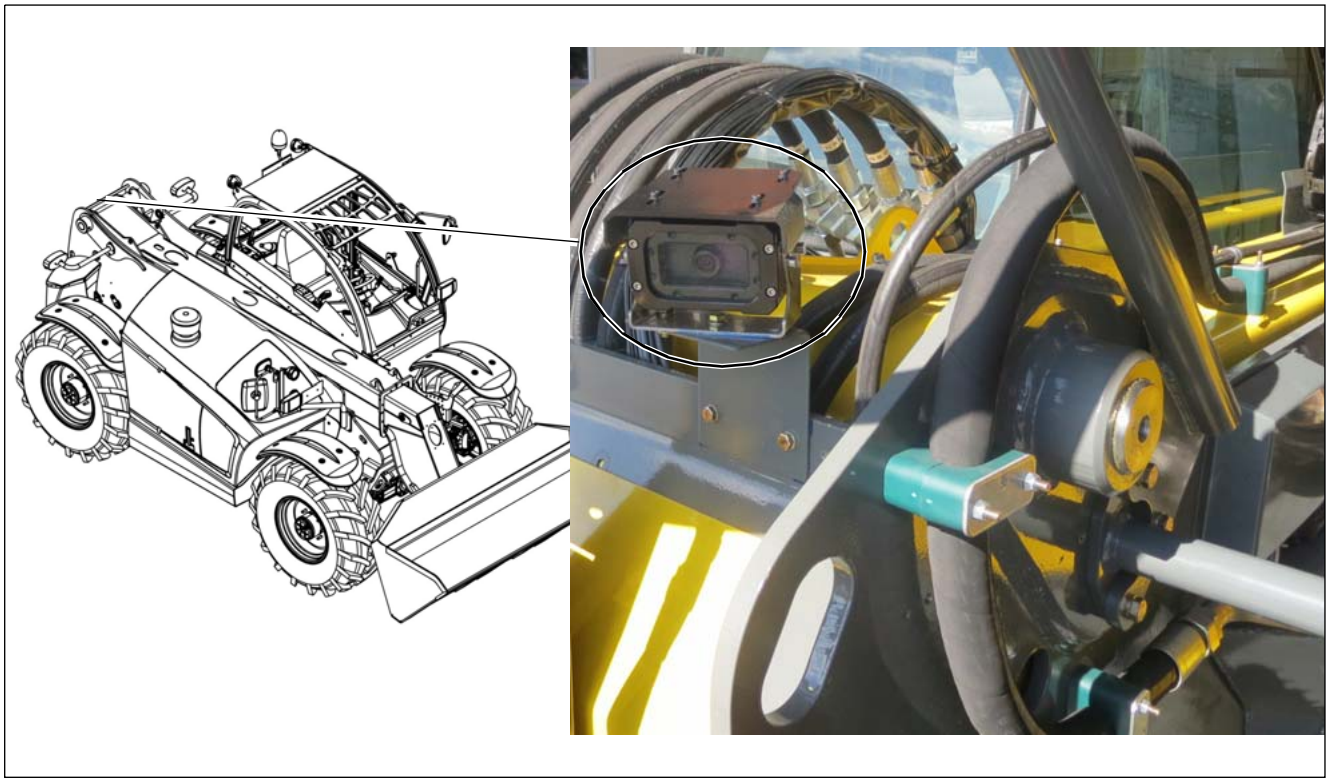

Videobox N031

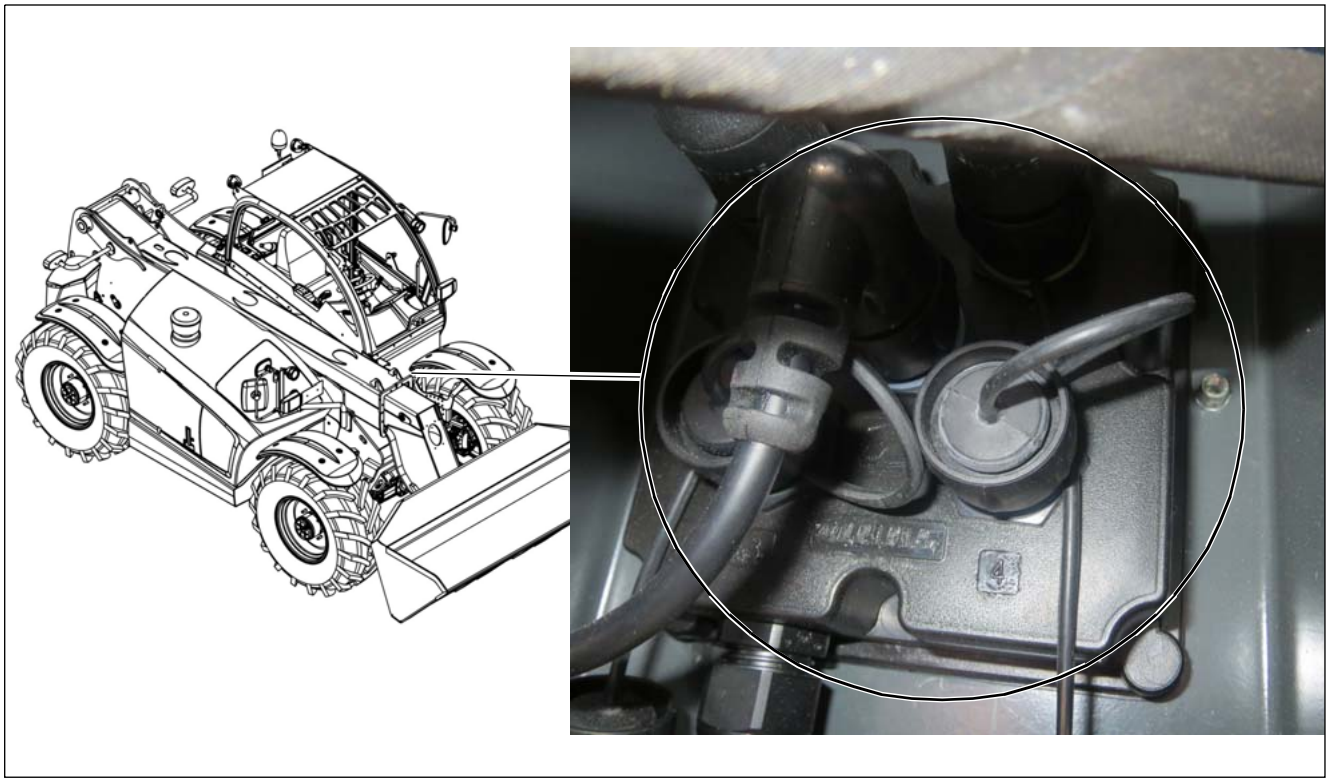

Diagnosis connector X001

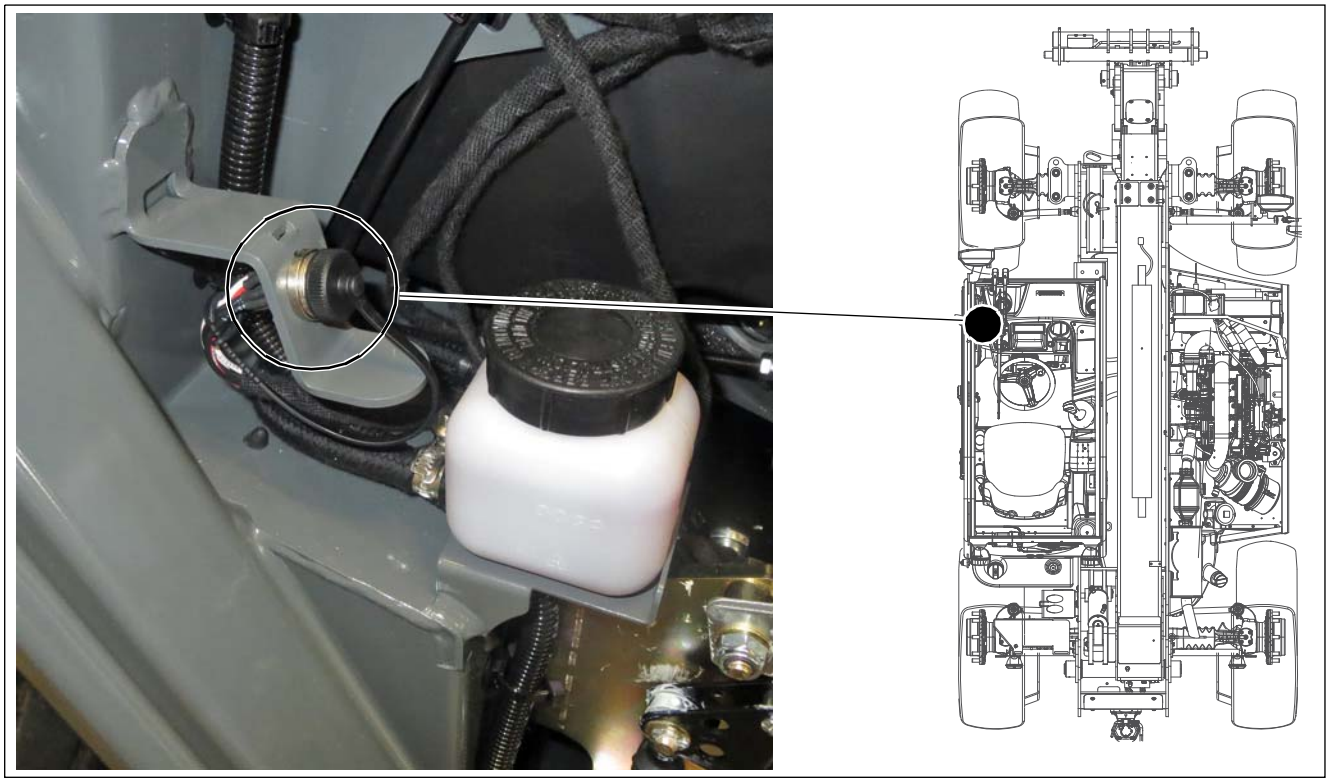

22 Error codes

22.1 Error code drive interlock N021

Code	KCN	Designation	SPN	FMI	Alarm text	Information text What kind of error has occurred?	Error diagnosis text
080	W002	Aerial	518080	2	Signal faulty or implausible	Connection to the antenna is interrupted or short-circuited	Error diagnosis at the antenna can be done only during an ignition change! 1. Check the supply voltage of the drive interlock N021 from Pin 7 via XP42 Pin 8 via fuse F032 (15A) to clamp 30. 2. Check the signal line from N21 Pin 11 to ground. 3. Check the signal line of the antenna drive interlock W002 up to XE23 Pin 11 and Pin 12.
081	S001	Transponder key status	518081	12	Control error (controller)	Key was not recognised	1. Check whether the correct key for the vehicle was used. 2. Teach the blue key with the red key.
				13	Calibration faulty / not executed	Incorrect key	1. Check whether the correct key for the vehicle was used.
082		Status of internal relay 1	518082	27	Open circuit or short circuit to earth	open wiring	1. Check the signal line from N021 Pin 5 and Pin 12. 2. Exchange drive interlock.
				26	Signal outside the valid range or Open circuit or short circuit against positive supply voltage	Short circuit	1. Check the signal line from N021 Pin 5 and Pin 12. 2. Exchange drive interlock.
083		Status of internal relay 2	518083	27	Open circuit or short circuit to earth	open wiring	1. Check the signal line from N021 Pin 3 and Pin 4. 2. Exchange drive interlock.
				26	Signal outside the valid range or Open circuit or short circuit against positive supply voltage	Short circuit	1. Check the signal line from N021 Pin 3 and Pin 4. 2. Exchange drive interlock.
084		Status of internal relay 3	518084	27 26	Open circuit or short circuit to earth	open wiring	1. Check the signal line from N021 Pin 1 and Pin 2. 2. Exchange drive interlock.
					Signal outside the valid range or Open circuit or short circuit against positive supply voltage	Short circuit	1. Check the signal line from N021 Pin 1 and Pin 2. 2. Exchange drive interlock.
085	N021	CAN bus reception error	518085	10	Abnormal signal modification rate	The drive interlock does not receive a signal from the CAN-Bus	1. Check the software of the other control unit. 2. Exchange drive interlock.
086	G002	Battery status	518086	16	Threshold passed	The board voltage has exceeded 30.5 V	1. Check the board voltage. 2. Check the alternator.
				18	Below threshold	The board voltage has fallen below 7.5 V	1. Check the battery voltage. 2. Charge or replace battery.
087		Vehicle protected	518087	13	Calibration faulty / not executed	Vehicle cannot be started	1. Check whether the correct key for the vehicle was used.
089		Reservoir full	518089	2	Signal faulty or implausible	Maximum number of key exceeded	1. Reduce number of keys.

22.2 Error codes for safe load indicator P006

Code	KCN	Designation	SPN	FMI	Alarm text	Information text			Error diagnosis text
						What kind of error has occurred?	How does the machine behave?	What can the user do?	
600	P006	Safe load indicator	516600	02	Implausible signal	Internal control unit error in control unit P006	1. Error message 600 in display 2. Overload cut-off active	1. Check fuse F021 2. Restart the machine 3. Check electrical plug connections	1. Check voltage supply to control unit P006, PIN 1 2. Check ground line at control unit D002 connector XE19, PIN 2
601	P006	Safe load indicator	516601	02	Implausible signal	Internal control unit error in control unit P006	1. Error message 601 in display 2. Overload cut-off active	1. Check fuse F021 2. Restart the machine 3. Check electrical plug connections	1. Check voltage supply to control unit P006, PIN 1 2. Check ground line at control unit D002 connector XE19, PIN 2
602	B008	Load sensor – strain gage	516602	10	Abnormal modification rate	Signal of overload sensor B008 sensor cell A to control unit P006 is outside the permissible range	1. Error message 602 in display 2. Overload cut-off active	1. Check fuse F021 2. Restart the machine 3. Check electrical plug connections	1. Check the signal line between load sensor B008, connector X009 and control unit P006 PIN 4. 2. Check the power supply between load sensor B008 connector X009 and control unit P006 PIN 6
603	B008	Load sensor – strain gage	516603	10	Abnormal modification rate	Signal of overload sensor B008 sensor cell B to control unit P006 is outside the permissible range	1. Error message 603 in display 2. Overload cut-off active	1. Check fuse F021 2. Restart the machine 3. Check electrical plug connections	1. Check the signal line between load sensor B008, connector X009 and control unit P006 PIN 5. 2. Check the power supply between load sensor B008 connector X009 and control unit P006 PIN 6
604	B008	Load sensor – strain gage	516604	10	Abnormal modification rate	The signals of the overload sensor B008 sensor cell A and B are outside the permissible range. Difference of sensor current in cells A & B > 30% for more than 5 seconds.	1. Error message 604 in display 2. Overload cut-off active	1. Check fuse F021 2. Restart the machine 3. Check electrical plug connections	1. Check the signal line between load sensor B008, connector X009 and control unit P006 PIN 5. 2. Check the signal line between load sensor B008, connector X009 and control unit P006 PIN 4. 3. Check the power supply between load sensor B008 connector X009 and control unit P006 PIN 6 4. Recalibrate safe load indicator.
605	P006	Safe load indicator	516605	02	Implausible signal	The voltage level at control unit P006 PIN 3 is outside the permissible range	1. Error message 605 in display 2. Overload cut-off active	1. Check fuse F021 2. Restart the machine 3. Check electrical plug connections	1. Check voltage supply to control unit P006, PIN 1 2. Check ground line at control unit D002 connector XE19, PIN 2 3. Signal line at control unit P006 PIN 3 rated voltage = 12 V for small 100% load
606	P006	Safe load indicator	516606	13	Not calibrated	The safe load indicator is not calibrated	1. Error message 606 in display 2. Overload cut-off active	1. Check fuse F021 2. Restart the machine 3. Check electrical plug connections	1. Calibrate

Code	KCN	Designation	SPN	FMI	Alarm text	Information text			Error diagnosis text
						What kind of error has occurred?	How does the machine behave?	What can the user do?	
607	P006	Safe load indicator	516607	17	Module does not answer	No CAN bus communication between control unit P006 and control unit N004, N015	1. Error message 607 in display 2. Overload cut-off active	1. Check fuse F021 2. Restart the machine 3. Check electrical plug connections	1. Check voltage supply to control unit P006, PIN 1 2. Check ground line at control unit D002 connector XE19, PIN 2 3. Check CAN Bus lines at control unit P006 connector XA02 PIN 7 and PIN 8 for short circuit and interruption 4. Check terminal resistance of CAN Bus lines. Rated resistance at control unit P006 between PIN 7 and PIN 8 = 60 Ohm
608	P006	Safe load indicator	516608	02	Implausible signal	Internal control unit error in control unit P006	1. Error message 608 in display 2. Overload cut-off active	1. Check fuse F021 2. Restart the machine 3. Check electrical plug connections	1. Check voltage supply to control unit P006, PIN 1 2. Check ground line at control unit D002 connector XE19, PIN 2
609	P006	Safe load indicator	516609	15	Threshold slightly exceeded	The signals of the overload sensor B008 sensor cell A and B are outside the permissible range Difference of sensor current in cells A & B > 10% and < 30% for more than 5 seconds. The worse value of the two measuring cells is used as a reference.	1. Notice message 609 in display 2. Lifting load is restricted	1. Send information to the dealer	1. Check the signal line between load sensor B008, connector X009 and control unit P006 PIN 5. 2. Check the signal line between load sensor B008, connector X009 and control unit P006 PIN 4. 3. Check the power supply between load sensor B008 connector X009 and control unit P006 PIN 6 4. Recalibrate safe load indicator.

22.3 Cab electronics error code

Code	KNC	Designation	SPN	FMI	Alarm text	Information text What kind of error has occurred?	Error diagnosis text
111	N004 B015	Coolant level error	111	1	Well below threshold	B015: Coolant level sensor – well below threshold value	1. Check the signal line of level sensor B015 connection A via fuse F013 (3A) to clamp 15. 2. Check the signal line of level sensor B015 connection B to control unit N004 Pin 148. 3. Check the signal line of level sensor B015 connection C up to water separator switch S058 Pin 2.
500	D002	Joystick error	516500	9	Abnormal update rate	D002: CAN-Bus joystick – abnormal update rate	Check the supply voltage for the joystick: 1. Check the line from joystick D002 Pin 2 to XP03 Pin 7 via fuse F010 (3A) to clamp 30. 2. Check the line from joystick D002 Pin 3 to XP06 Pin 9 via fuse F032 (5A) to clamp 15. 3. Check the line from Joystick D002 Pin 1 to ground. 4. Check the terminal resistance from CAN 1 on diagnostic connector X001 between Pin 4 (CAN 1 H) and Pin 3 (CAN 1 L). This should be 120 ohm. 5. Exchange joystick D002.
				12	Control error (controller)	D002: CAN-Bus Joystick – control error (controller)	
				19	Faulty communication between components	D002: CAN-Bus Joystick – faulty communication between components	
				26	Signal outside the valid range	D002: CAN-Bus Joystick – signal outside valid range	
699	B008 N004 P006	Overload warning device error	516699	2	Signal faulty or implausible	P006: OMD – CRC Error in data flash	1. Ignition change. 2. Check the connections and the cabling of the P006 overload warning device. 3. Check the signal line of overload warning device P006 Pin 1 via fuse F013 (5A) to clamp 15. 4. Check the signal line of overload warning device P006 Pin 2 to ground. 5. Check signal line of overload warning device P006 Pin 3 up to control unit N004 Pin 122. 6. Check signal line of overload warning device P006 Pin 4 up to load sensor B008 Pin A. 7. Check signal line of overload warning device P006 Pin 6 up to load sensor B008 Pin B. 8. Check signal line of overload warning device P006 Pin 5 up to load sensor B008 Pin C. 9. Exchange overload sensor P006.
				9	Abnormal update rate	P006: OMD – Control unit counter faulty	
				12	Control error (controller)	P006: OMD – CRC Error in system flash	
				13	Calibration faulty / not executed	P006: OMD – Calibration faulty/not performed	1. Recalibrate OMD. 2. Ignition change.

Code	KNC	Designation	SPN	FMI	Alarm text	Information text What kind of error has occurred?	Error diagnosis text
699	B008 N004 P006	Overload warning device error	516699	14	Special error	P006: OMD control unit not found	1. Ignition change. 2. Check the connections and the cabling of the P006 overload warning device. 3. Check the signal line of overload warning device P006 Pin 1 via fuse F013 (5A) to clamp 15. 4. Check the signal line of overload warning device P006 Pin 2 to ground. 5. Check signal line of overload warning device P006 Pin 3 up to control unit N004 Pin 122. 6. Check signal line of overload warning device P006 Pin 4 up to load sensor B008 Pin A. 7. Check signal line of overload warning device P006 Pin 6 up to load sensor B008 Pin B. 8. Check signal line of overload warning device P006 Pin 5 up to load sensor B008 Pin C. 9. Exchange overload sensor P006.
				22	No signal, components not available	P006: OMD – Error in digital switching output	
				24	Logical error/software	P006: OMD – Redundancy error of sensor cells – logical error/software	1. Change ignition 2. Check the control unit connector, clean contacts, check pins for discoloura-tion 3. Read error memory with KADIAS, check whether additional error codes have been entered, save error memory. 4. Repeat ignition change.
				26	Signal outside the valid range	P006: OMD – Sensor cell A or B out of range	1. Check the signal line from OMD P006 Pin 1 via fuse F013 (5A) up to main fuse board 12V64A X2. 2. Check the signal line from OMD P006 Pin 2 to ground. 3. Check signal line from OMD P006 Pin 3 up to control unit N004 Pin 122. 4. Check the signal line from OMD P006 Pin 4 up to load sensor B008 Pin A/3. 5. Check signal line from OMD P006 Pin 5 up to load sensor B008 Pin C/3. 6. Check the signal line from OMD P006 Pin 6 up to load sensor B008 Pin B/3. 7. Check the terminal resistance on the CAN-Bus.
005	B006	Error CAN reception ET1 – engine coolant temperature sensor	517005	9	Abnormal update rate	B006: Engine water temperature sensor – time-out/abnormal clock rate	1. Change ignition 2. Check the terminal resistance from CAN 0 on diagnostic connector X001 between Pin 2 (CAN 0 H) and Pin 1 (CAN 0 L). This should be 120 ohm. 3. Check the sensor connections 4. Contact manufacturer.
				19	Faulty communication between components	B006: Engine water temperature sensor – data reception with active error status	1. Change ignition 2. Check the terminal resistance from CAN 0 on diagnostic connector X001 between Pin 2 (CAN 0 H) and Pin 1 (CAN 0 L). This should be 120 ohm. 3. Check the sensor connections 4. Contact manufacturer.

Code	KNC	Designation	SPN	FMI	Alarm text	Information text What kind of error has occurred?	Error diagnosis text
008	B009	Speed sensor error	517008	2	Signal faulty or implausible	B009 – CCVS1: Drive functions, sensor speed, travel speed – signal and CAN – message data faulty or not plausible	1. Check signal line of speed sensor B009 Pin 4 up to control unit N001 Pin 8. 2. Check signal line of speed sensor B009 Pin 5 up to control unit N001 Pin 9. 3. Check signal line of speed sensor B009 Pin 2 up to control unit N001 Pin 4. 4. Check signal line of speed sensor B009 Pin 3 up to control unit N004 Pin 150. 5. Check signal line of speed sensor B009 Pin 1 up to control unit N001 Pin 5.
				9	Abnormal update rate	B009 – CCVS1: Drive functions, sensor speed, Can-Bus communication – time-out/abnormal clock rate	1. Change ignition 2. Check the terminal resistance from CAN 0 on diagnostic connector X001 between Pin 2 (CAN 0 H) and Pin 1 (CAN 0 L). This should be 120 ohm. 3. Check the sensor connections
				19	Faulty communication between components	B009 – CCVS1: Drive functions, sensor speed, Can-Bus communication – data reception with active error status	1. Change ignition 2. Check the terminal resistance from CAN 0 on diagnostic connector X001 between Pin 2 (CAN 0 H) and Pin 1 (CAN 0 L). This should be 120 ohm. 3. Check the sensor connections
009	B010	Error CAN reception EEC1 message	517009	9	Abnormal update rate	B010: engine speed, Can-Bus communication – time-out/abnormal clock rate	1. Change ignition 2. Check the terminal resistance from CAN 0 on diagnostic connector X001 between Pin 2 (CAN 0 H) and Pin 1 (CAN 0 L). This should be 120 ohm. 3. Check the sensor connections 4. Contact manufacturer.
				19	Faulty communication between components	B010: Engine speed, Can-Bus communication – data reception with active error status	1. Change ignition 2. Check the terminal resistance from CAN 0 on diagnostic connector X001 between Pin 2 (CAN 0 H) and Pin 1 (CAN 0 L). This should be 120 ohm. 3. Check the sensor connections 4. Contact manufacturer.
015	B016	Temperature sensor fan control error	517015	4	Under signal range or short circuit against machine ground / sensor ground	B016: Temperature sensor fan control – signal range undershot or circuit against machine ground/sensor ground	1. Check signal line at temperature sensor fan control B016 Pin 1 via resistor R037 (100 ohm) to control unit N004 Pin 127. 2. Check signal line at temperature sensor fan control B016 Pin 2 up to control unit N004 Pin 243.
				12	Control error (controller)	B016 Temperature sensor fan control – control error (controller)	1. Change ignition 2. Check software version and update if necessary. 3. Check the terminal resistance from CAN 0 on diagnostic connector X001 between Pin 2 (CAN 0 H) and Pin 1 (CAN 0 L). This should be 120 ohm. 4. Read error memory with KADIAS, check whether additional error codes have been entered, save error memory. 5. Repeat ignition change.
				28	Open circuit or short circuit against positive supply voltage	B016: Temperature sensor fan control – open circuit or short circuit against positive supply voltage	1. Check signal line at temperature sensor fan control B016 Pin 1 via resistor R037 (100 ohm) to control unit N004 Pin 127. 2. Check signal line at temperature sensor fan control B016 Pin 2 up to control unit N004 Pin 243.

Code	KNC	Designation	SPN	FMI	Alarm text	Information text What kind of error has occurred?	Error diagnosis text
027	B028	Tipping cylinder angle sensor Signal 1 error	517027	2	Signal faulty or implausible	B028: Tipping cylinder angle sensor both signals – data faulty or not plausible	1. Check signal line of tipping cylinder angle sensor B028 Pin 4 up to control unit N004 Pin 234. 2. Check signal line of tipping cylinder angle sensor B028 Pin 8 up to control unit N004 Pin 217 (GND 1). 3. Check signal line of tipping cylinder angle sensor B028 Pin 5 up to control unit N004 Pin 130.
				3	Signal range exceeded or short circuit against positive supply voltage	B028: Tipping cylinder angle sensor Signal 1 – short circuit to plus or high voltage	
				12	Control error (controller)	B028: Tipping cylinder angle sensor Signal 1 – control error (controller)	1. Change ignition 2. Check software version and update if necessary. 3. Recalibrate sensor 4. Read error memory with KADIAS, check whether additional error codes have been entered, save error memory. 5. Repeat ignition change.
				13	Calibration faulty / not executed	B028: Tipping cylinder angle sensor both signals – calibration faulty/not performed	1. Recalibrate sensor 2. Change ignition
				24	Logical error/software	B028: Tipping cylinder angle sensor both signals – logical error/software	1. Change ignition 2. Check software version and update if necessary. 3. Check signal line of tipping cylinder angle sensor B028 Pin 4 up to control unit N004 Pin 234. 4. Check signal line of tipping cylinder angle sensor B028 Pin 8 up to control unit N004 Pin 217 (GND 1). 5. Check signal line of tipping cylinder angle sensor B028 Pin 5 up to control unit N004 Pin 130. 6. Recalibrate tipping cylinder angle sensor 7. Repeat ignition change.
				26	Signal outside the valid range	B028: Tipping cylinder angle sensor Signal 1 – control error (controller)	1. Change ignition 2. Check software version and update if necessary. 3. Check signal line of tipping cylinder angle sensor B028 Pin 4 up to control unit N004 Pin 234. 4. Check signal line of tipping cylinder angle sensor B028 Pin 8 up to control unit N004 Pin 217 (GND 1). 5. Check signal line of tipping cylinder angle sensor B028 Pin 5 up to control unit N004 Pin 130. 6. Exchange cab controller.
				27	Open circuit or short circuit to ground.	B028: Tipping cylinder angle sensor Signal 1 – open wiring or short circuit to ground.	1. Check signal line of tipping cylinder angle sensor B028 Pin 4 up to control unit N004 Pin 234. 2. Check signal line of tipping cylinder angle sensor B028 Pin 8 up to control unit N004 Pin 217 (GND 1). 3. Check signal line of tipping cylinder angle sensor B028 Pin 5 up to control unit N004 Pin 130.
030	B031	Error CAN reception AMB1 – outside temperature sensor	517030	9	Abnormal update rate	B031: Outside temperature sensor – time-out/ abnormal clock rate	1. Change ignition 2. Check the terminal resistance from CAN 0 on diagnostic connector X001 between Pin 2 (CAN 0 H) and Pin 1 (CAN 0 L). This should be 120 ohm. 3. Check the sensor connections
				19	Faulty communication between components	B031: Outside temperature sensor – data reception with active error status	1. Change ignition 2. Check the terminal resistance from CAN 0 on diagnostic connector X001 between Pin 2 (CAN 0 H) and Pin 1 (CAN 0 L). This should be 120 ohm. 3. Check the sensor connections

Code	KNC	Designation	SPN	FMI	Alarm text	Information text What kind of error has occurred?	Error diagnosis text
056	B057	Error CAN reception IC1 – intake air temperature sensor	517056	9	Abnormal update rate	B057: Intake air temperature sensor – time-out/ abnormal clock rate	1. Change ignition 2. Check the terminal resistance from CAN 0 on diagnostic connector X001 between Pin 2 (CAN 0 H) and Pin 1 (CAN 0 L). This should be 120 ohm. 3. Check the sensor connections 4. Contact manufacturer.
				19	Faulty communication between components	B057: Intake air temperature sensor – data reception with active error status	
101	B102	Triangle load pressure sensor error	517101	3	Signal range exceeded or short circuit against positive supply voltage	B102: Triangle rear lifting mechanism load pressure sensor – signal range exceeded or short circuit against positive supply voltage	1. Check the signal line of triangle rear lifting mechanism load pressure sensor B102 Pin 2 via fuse F028 (3A) up to main fuse board 12V64A X2. 2. Check signal line of triangle rear lifting mechanism load pressure sensor B102 Pin 3 up to control unit N004 Pin 111. 3. Check the signal line of triangle rear lifting mechanism load pressure sensor B102 Pin 1 to ground.
				12	Control error (controller)	B102: Triangle rear lifting mechanism load pressure sensor – control error (controller)	1. Change ignition 2. Check software version and update if necessary. 3. Check the signal line of triangle rear lifting mechanism load pressure sensor B102 Pin 2 via fuse F028 (3A) up to clamp 15. 4. Check the signal line of triangle rear lifting mechanism load pressure sensor B102 Pin 1 to ground. 5. Check the signal line of triangle rear lifting mechanism load pressure sensor B102 Pin 3 up to control unit N004 Pin 111. 6. Exchange cab controller.
				26	Signal outside the valid range	B102: Triangle rear lifting mechanism load pressure sensor – signal outside valid range	1. Check the signal line of triangle rear lifting mechanism load pressure sensor B102 Pin 2 via fuse F028 (3A) up to main fuse board 12V64A X2. 2. Check signal line of triangle rear lifting mechanism load pressure sensor B102 Pin 3 up to control unit N004 Pin 111. 3. Check the signal line of triangle rear lifting mechanism load pressure sensor B102 Pin 1 to ground.
				27	Open circuit or short circuit to ground.	B102: Triangle rear lifting mechanism load pressure sensor – open circuit or short circuit to ground.	
103	B104	Speed sensor error	517103	9	Abnormal update rate	B104: Speed sensor – time-out/abnormal clock rate	1. Change ignition 2. Check the terminal resistance from CAN 0 on diagnostic connector X001 between Pin 2 (CAN 0 H) and Pin 1 (CAN 0 L). This should be 120 ohm. 3. Check the sensor connections
				19	Faulty communication between components	B104: Speed sensor – data reception with active error status	

Code	KNC	Designation	SPN	FMI	Alarm text	Information text What kind of error has occurred?	Error diagnosis text
104	B105	Triangle potentiometer – Signal 1 – error	517104	2	Signal faulty or implausible	B105 Triangle potentiometer – both signals – data faulty or implausible	1. Check signal line at triangle potentiometer B105 Pin 1 up to control unit N004 Pin 247. 2. Check signal line at triangle potentiometer B105 Pin 3 up to control unit N004 Pin 257. 3. Check signal line at triangle potentiometer B105 Pin 2 up to control unit N004 Pin 113.
				3	Signal range exceeded or short circuit against positive supply voltage	B105 Triangle potentiometer – Signal 1 – short circuit to plus/high voltage	
				12	Control error (controller)	B105 Triangle potentiometer – control error (controller)	1. Change ignition 2. Check software version and update if necessary. 3. Check the signal line of triangle potentiometer B105 Pin 1 up to control unit N004 Pin 247. 4. Check the signal line of triangle potentiometer B105 Pin 4 up to control unit N004 Pin 247. 5. Check the signal line of from potentiometer B105 Pin 3 up to control unit N004 Pin 257. 6. Check the signal line of triangle potentiometer B105 Pin 6 up to control unit N004 Pin 258. 7. Check the signal line of triangle potentiometer B105 Pin 2 up to control unit N004 Pin 113. 8. Check the signal line of triangle potentiometer B105 Pin 5 up to control unit N004 Pin 137. 9. Exchange cab controller.
				26	Signal outside the valid range	B105 Triangle potentiometer – both signals out-side valid range	1. Check signal line at triangle potentiometer B105 Pin 1 up to control unit N004 Pin 247. 2. Check signal line at triangle potentiometer B105 Pin 3 up to control unit N004 Pin 257. 3. Check signal line at triangle potentiometer B105 Pin 2 up to control unit N004 Pin 113.
				27	Open circuit or short circuit to ground.	B105 Triangle potentiometer – Signal 1 – open wiring or short circuit to Ground	
113	B028	Tipping cylinder angle sensor Signal 2 error	517113	3	Signal range exceeded or short circuit against positive supply voltage	B028: Tipping cylinder angle sensor Signal 2 – short circuit to plus or high voltage	1. Check signal line of tipping cylinder angle sensor B028 Pin 1 up to control unit N004 Pin 247. 2. Check signal line of tipping cylinder angle sensor B028 Pin 7 up to control unit N004 Pin 230 (GND 2). 3. Check signal line of tipping cylinder angle sensor B028 Pin 5 up to control unit N004 Pin 106.
				27	Open circuit or short circuit to ground.	B028: Tipping cylinder angle sensor Signal 2 – open circuit or short circuit to ground.	
114	B105	Triangle potentiometer – Signal 2 – error	517114	3	Signal range exceeded or short circuit against positive supply voltage	B105 Triangle potentiometer – Signal 2 – short circuit to plus/high voltage	1. Check signal line at triangle potentiometer B105 Pin 4 up to control unit N004 Pin 247. 2. Check signal line at triangle potentiometer B105 Pin 6 up to control unit N004 Pin 258. 3. Check signal line at triangle potentiometer B105 Pin 5 up to control unit N004 Pin 137.
				27	Open circuit or short circuit to ground.	B105 Triangle potentiometer – Signal 2 – open wiring or short circuit to Ground	

Code	KNC	Designation	SPN	FMI	Alarm text	Information text What kind of error has occurred?	Error diagnosis text
551		Flash memory	517551	19	Faulty communication between components	E60: system function monitoring, control unit flash memory – memory error – Data reception with active error status	1. Change ignition 2. Check the control unit connector, clean contacts, check pins for discoloura-tion 3. Read error memory with KADIAS, check whether additional error codes have been entered, save error memory. 4. Repeat ignition change.
				24	Logical error/software	AppInit: system function monitoring, control software object initialisation – wrong machine configuration (object initialisation failed) – logi-cal error (software error)	1. Change ignition 2. Check the control unit connector, clean contacts, check pins for discoloura-tion 3. Read error memory with KADIAS, check whether additional error codes have been entered, save error memory. 4. Repeat ignition change.
900		Control error	517900	12	Control error (controller)	CPU: system function monitoring, central pro-cessor unit control unit error	1. Change ignition 2. Check the control unit connector, clean contacts, check pins for discoloura-tion 3. Read error memory with KADIAS, check whether additional error codes have been entered, save error memory. 4. Repeat ignition change.
901		Control error	517901	12	Control error (controller)	WD: system function monitoring, watchdog control unit error	1. Change ignition 2. Check the control unit connector, clean contacts, check pins for discoloura-tion 3. Read error memory with KADIAS, check whether additional error codes have been entered, save error memory. 4. Repeat ignition change.
902		Control unit communication error	517902	2	Signal faulty or implausible	HST: System function monitoring, control unit communication error	1. Change ignition 2. Check the control unit connector, clean contacts, check pins for discoloura-tion 3. Read error memory with KADIAS, check whether additional error codes have been entered, save error memory. 4. Repeat ignition change.
903		Control unit safety switch error	517903	2	Signal faulty or implausible	K15: system function monitoring, machine con-trol MVCU control unit – both signals – incorrect or implausible data	1. Change ignition 2. Check the control unit connector, clean contacts, check pins for discoloura-tion 3. Read error memory with KADIAS, check whether additional error codes have been entered, save error memory. 4. Repeat ignition change.

Code	KNC	Designation	SPN	FMI	Alarm text	Information text What kind of error has occurred?	Error diagnosis text
903		Control unit safety switch error	517903	27	Open circuit or short circuit to ground.	POWENA: system function monitoring, safety power supply for outputs control unit – both signals – open wiring or short circuit to Ground or SW 0: System function monitoring, safety switch control unit – Signal 1 – open wiring or short circuit to Ground or SW 1: System function monitoring, safety switch control unit – Signal 2 – open wiring or short circuit to Ground or SW 2: System function monitoring, safety switch control unit – Signal 3 – open wiring or short circuit to Ground	1. Change ignition 2. Check the control unit connector, clean contacts, check pins for discoloura-tion 3. Read error memory with KADIAS, check whether additional error codes have been entered, save error memory. 4. Repeat ignition change.
904		VCU error	517904	9	Abnormal update rate	TIME: system function monitoring, central processor unit control unit – time-out/abnormal clock rate.	1. Change ignition 2. Check the control unit connector, clean contacts, check pins for discoloura-tion 3. Read error memory with KADIAS, check whether additional error codes have been entered, save error memory. 4. Repeat ignition change.
				16	Threshold passed	UBAT: system function monitoring, monitoring control unit – Signal 1 – threshold exceeded	
				18	Below threshold	UBAT: system function monitoring, monitoring control unit – Signal 1 – threshold undershot	
905		VCU error	517905	16	Threshold passed	TEMP: System function monitoring, monitoring control unit – voltage supply too low – Signal 2 – signal very low	1. Change ignition 2. Check the control unit connector, clean contacts, check pins for discoloura-tion 3. Read error memory with KADIAS, check whether additional error codes have been entered, save error memory. 4. Repeat ignition change.
				18	Below threshold	TEMP: System function monitoring, monitoring control unit – controller temperature too low – Signal 2 – signal very high	

Code	KNC	Designation	SPN	FMI	Alarm text	Information text What kind of error has occurred?	Error diagnosis text
906		Sensor supply voltage	517906	16	Threshold passed	SenS1: system function monitoring, sensor power supply 1 monitoring – Signal 1 – threshold exceeded or 'SenS2: system function monitoring, sensor power supply 2 monitoring – Signal 2 – threshold exceeded or 'VarSenS3: system function monitoring, sensor power supply 3 monitoring – Signal 2 – threshold exceeded	1. Change ignition 2. Check the control unit connector, clean contacts, check pins for discoloura-tion 3. Read error memory with KADIAS, check whether additional error codes have been entered, save error memory. 4. Repeat ignition change.
				18	Below threshold	SenS1: system function monitoring, sensor power supply 1 monitoring – Signal 1 – threshold undershot or 'SenS2: system function monitoring, sensor power supply 2 monitoring – Signal 2 – threshold undershot or 'VarSenS3: system function monitoring, sensor power supply 3 monitoring – Signal 2 – threshold undershot	1. Change ignition 2. Check the control unit connector, clean contacts, check pins for discoloura-tion 3. Read error memory with KADIAS, check whether additional error codes have been entered, save error memory. 4. Repeat ignition change.
907		CAN Bus	517907	19	Faulty communication between components	E64: system function monitoring, Control unit CAN BUS 0 – transmit buffer overflow Data reception with active error status or E65: system function monitoring, Control unit CAN BUS 0 – receive buffer overflow Data reception with active error status or E61: system function monitoring, CAN BUS 0 control unit – BUS Off – No signal/missing component	1. Change ignition 2. Check the control unit connector, clean contacts, check pins for discoloura-tion 3. Read error memory with KADIAS, check whether additional error codes have been entered, save error memory. 4. Repeat ignition change.
908		Eeprom	517908	12	Control error (controller)	E1: system function monitoring, control unit Eeprom memory error	1. Change ignition 2. Check the control unit connector, clean contacts, check pins for discoloura-tion 3. Read error memory with KADIAS, check whether additional error codes have been entered, save error memory. 4. Repeat ignition change.
				19	Faulty communication between components	E64: system function monitoring, Control unit CAN BUS 0 – transmit buffer overflow Data reception with active error status or E65: system function monitoring, Control unit CAN BUS 0 – receive buffer overflow Data reception with active error status	

Code	KNC	Designation	SPN	FMI	Alarm text	Information text What kind of error has occurred?	Error diagnosis text
909		RAM	517909	12	Control error (controller)	E2: system function monitoring, control unit RAM memory error	1. Change ignition 2. Check the control unit connector, clean contacts, check pins for discoloura-tion 3. Read error memory with KADIAS, check whether additional error codes have been entered, save error memory. 4. Repeat ignition change.
910		Eeprom	517910	12	Control error (controller)	E3: system function monitoring, control unit Eeprom memory error	1. Change ignition 2. Check the control unit connector, clean contacts, check pins for discoloura-tion 3. Read error memory with KADIAS, check whether additional error codes have been entered, save error memory. 4. Repeat ignition change.
911		Eeprom	517911	12	Control error (controller)	E4: system function monitoring, control unit Eeprom memory error	1. Change ignition 2. Check the control unit connector, clean contacts, check pins for discoloura-tion 3. Read error memory with KADIAS, check whether additional error codes have been entered, save error memory. 4. Repeat ignition change.
912		Eeprom	517912	12	Control error (controller)	E5: system function monitoring, control unit Eeprom memory error	1. Change ignition 2. Check the control unit connector, clean contacts, check pins for discoloura-tion 3. Read error memory with KADIAS, check whether additional error codes have been entered, save error memory. 4. Repeat ignition change.
913		RAM	517913	12	Control error (controller)	E2: system function monitoring, control unit RAM memory error	1. Change ignition 2. Check the control unit connector, clean contacts, check pins for discoloura-tion 3. Read error memory with KADIAS, check whether additional error codes have been entered, save error memory. 4. Repeat ignition change.
916		RAM	517916	12	Control error (controller)	E2: system function monitoring, control unit RAM memory error	1. Change ignition 2. Check the control unit connector, clean contacts, check pins for discoloura-tion 3. Read error memory with KADIAS, check whether additional error codes have been entered, save error memory. 4. Repeat ignition change.
919		CAN BUS 0	517919	19	Faulty communication between components	E61: system function monitoring, Control unit CAN BUS 0 – drive – BUS Off - No signal/missing component or E61: system function monitoring, Control unit CAN BUS 0 – work hydraulicspe-riphery – BUS Off - No signal/missing component	1. Change ignition 2. Check the control unit connector, clean contacts, check pins for discoloura-tion 3. Read error memory with KADIAS, check whether additional error codes have been entered, save error memory. 4. Repeat ignition change.
040	P011	CAN communication to display error	518040	9	Abnormal update rate	P011: CAN – faulty communication to display – abnormal update rate	1. Check the connections and the cabling of the P011 display 2. Check the terminal resistance from CAN 0 on diagnostic connector X001 between Pin 2 (CAN 0 H) and Pin 1 (CAN 0 L). This should be 120 ohm. 3. Exchange P011 display.

Code	KNC	Designation	SPN	FMI	Alarm text	Information text What kind of error has occurred?	Error diagnosis text
060	N023	Jog dial error	518060	9	Abnormal update rate	N023: Jog dial – abnormal update rate	1. Check the signal line of jog dial N023 Pin 1 via fuse F032 (5A) to clamp 15. 2. Check the signal line of jog dial N023 Pin 2 to ground. 3. Check the terminal resistance from CAN 1 on diagnostic connector X001 between Pin 4 (CAN 1 H) and Pin 3 (CAN 1 L). This should be 120 ohm. 4. Exchange jog dial N023.
061	N023	Jog dial F1 touch button error	518061	7	Missing response of mechanical system or incorrect setting	N023: F1 touch button, jog dial – mechanics do not respond/jammed actuated	1. Check the signal line of jog dial N023 Pin 1 via fuse F032 (5A) to clamp 15. 2. Check the signal line of jog dial N023 Pin 2 to ground. 3. Check the terminal resistance from CAN 1 on diagnostic connector X001 between Pin 4 (CAN 1 H) and Pin 3 (CAN 1 L). This should be 120 ohm. 4. Exchange jog dial N023.
062	N023	Jog dial F2 touch button error	518062	7	Missing response of mechanical system or incorrect setting	N023: F2 touch button, jog dial – mechanics do not respond/jammed actuated	1. Check the signal line of jog dial N023 Pin 1 via fuse F032 (5A) to clamp 15. 2. Check the signal line of jog dial N023 Pin 2 to ground. 3. Check the terminal resistance from CAN 1 on diagnostic connector X001 between Pin 4 (CAN 1 H) and Pin 3 (CAN 1 L). This should be 120 ohm. 4. Exchange jog dial N023.
063	N023	Jog dial F3 touch button error	518063	7	Missing response of mechanical system or incorrect setting	N023: F3 touch button, jog dial – mechanics do not respond/jammed actuated	1. Check the signal line of jog dial N023 Pin 1 via fuse F032 (5A) to clamp 15. 2. Check the signal line of jog dial N023 Pin 2 to ground. 3. Check the terminal resistance from CAN 1 on diagnostic connector X001 between Pin 4 (CAN 1 H) and Pin 3 (CAN 1 L). This should be 120 ohm. 4. Exchange jog dial N023.
064	N023	Jog dial 4 back touch button error	518064	7	Missing response of mechanical system or incorrect setting	N023: 4 back touch button, jog dial – mechanics do not respond/jammed actuated	1. Check the signal line of jog dial N023 Pin 1 via fuse F032 (5A) to clamp 15. 2. Check the signal line of jog dial N023 Pin 2 to ground. 3. Check the terminal resistance from CAN 1 on diagnostic connector X001 between Pin 4 (CAN 1 H) and Pin 3 (CAN 1 L). This should be 120 ohm. 4. Exchange jog dial N023.
065	N023	Jog dial 5 home touch button error	518065	7	Missing response of mechanical system or incorrect setting	N023: 5 home touch button, jog dial – mechanics do not respond/jammed actuated	1. Check the signal line of jog dial N023 Pin 1 via fuse F032 (5A) to clamp 15. 2. Check the signal line of jog dial N023 Pin 2 to ground. 3. Check the terminal resistance from CAN 1 on diagnostic connector X001 between Pin 4 (CAN 1 H) and Pin 3 (CAN 1 L). This should be 120 ohm. 4. Exchange jog dial N023.
066	N023	Jog dial print rotating wheel error	518066	7	Missing response of mechanical system or incorrect setting	N023: Press rotary wheel, jog dial – mechanics do not respond/jammed actuated	1. Check the signal line of jog dial N023 Pin 1 via fuse F032 (5A) to clamp 15. 2. Check the signal line of jog dial N023 Pin 2 to ground. 3. Check the terminal resistance from CAN 1 on diagnostic connector X001 between Pin 4 (CAN 1 H) and Pin 3 (CAN 1 L). This should be 120 ohm. 4. Exchange jog dial N023.
067	N023	Jog dial right rotating wheel error	518067	7	Missing response of mechanical system or incorrect setting	N023: Rotate rotary wheel right, jog dial – mechanics do not respond/jammed actuated	1. Check the signal line of jog dial N023 Pin 1 via fuse F032 (5A) to clamp 15. 2. Check the signal line of jog dial N023 Pin 2 to ground. 3. Check the terminal resistance from CAN 1 on diagnostic connector X001 between Pin 4 (CAN 1 H) and Pin 3 (CAN 1 L). This should be 120 ohm. 4. Exchange jog dial N023.
068	N023	Jog dial left rotating wheel error	518068	7	Missing response of mechanical system or incorrect setting	N023: Rotate rotary wheel left, jog dial – mechanics do not respond/jammed actuated	1. Check the signal line of jog dial N023 Pin 1 via fuse F032 (5A) to clamp 15. 2. Check the signal line of jog dial N023 Pin 2 to ground. 3. Check the terminal resistance from CAN 1 on diagnostic connector X001 between Pin 4 (CAN 1 H) and Pin 3 (CAN 1 L). This should be 120 ohm. 4. Exchange jog dial N023.

Code	KNC	Designation	SPN	FMI	Alarm text	Information text What kind of error has occurred?	Error diagnosis text
905	P006	Overload warning device error	518905	2	Signal faulty or implausible	P006: OMD – Difference between CAN message and pin signal	1. Check the signal line from OMD P006 Pin 1 via fuse F013 (5A) up to main fuse board 12V64A X2. 2. Check the signal line from OMD P006 Pin 2 to ground. 3. Check signal line from OMD P006 Pin 3 up to control unit N004 Pin 122. 4. Check the signal line from OMD P006 Pin 4 up to load sensor B008 Pin A/3. 5. Check signal line from OMD P006 Pin 5 up to load sensor B008 Pin C/3. 6. Check the signal line from OMD P006 Pin 6 up to load sensor B008 Pin B/3. 7. Check the terminal resistance on the CAN-Bus.
				9	Abnormal update rate	P006: OMD – Time-out while receiving CAN message	1. Ignition change. 2. Check the connections and the cabling of the P006 overload warning device. 3. Check the signal line of overload warning device P006 Pin 1 via fuse F013 (5A) to clamp 15. 4. Check the signal line of overload warning device P006 Pin 2 to ground. 5. Check signal line of overload warning device P006 Pin 3 up to control unit N004 Pin 122. 6. Check signal line of overload warning device P006 Pin 4 up to load sensor B008 Pin A. 7. Check signal line of overload warning device P006 Pin 6 up to load sensor B008 Pin B. 8. Check signal line of overload warning device P006 Pin 5 up to load sensor B008 Pin C. 9. Exchange overload sensor P006.
				19	Faulty communication between components	P006: OMD – data reception with active error status	
960	S011	Parking brake error	518960	2	Signal faulty or implausible	S011: release, parking brake changeover contact – both signals, incorrect or implausible data	1. Check the signal line of hand brake switch S011 Pin 1 via fuse F014 (3A) to clamp 15. 2. Check signal line of hand brake switch S011 Pin 2 up to control unit N004 Pin 243. 3. Check signal line of hand brake switch S011 Pin 3 up to control unit N004 Pin 147. 4. Check signal line of hand brake switch S011 Pin 4 up to control unit N004 Pin 123. If the parking brake is not actuate, the contact between Pin 1 and Pin 4 is open. The contact between Pin 2 and Pin 3 is closed.
974	S025	Differential lock push button error	518974	7	Missing response of mechanical system or incorrect setting	S025: Differential lock touch button – mechanics do not respond/jammed actuated	Check the supply voltage for the joystick: 1. Check the line from joystick D002 Pin 2 to XP03 Pin 7 via fuse F010 (3A) to clamp 30. 2. Check the line from joystick D002 Pin 3 to XP06 Pin 9 via fuse F032 (5A) to clamp 15. 3. Check the line from Joystick D002 Pin 1 to ground. 4. Exchange joystick.
				19	Faulty communication between components	S025: Differential lock touch button – faulty communication between components	Check the supply voltage for the joystick: 1. Check the line from joystick D002 Pin 2 to XP03 Pin 7 via fuse F010 (3A) to clamp 30. 2. Check the line from joystick D002 Pin 3 to XP06 Pin 9 via fuse F032 (5A) to clamp 15. 3. Check the line from Joystick D002 Pin 1 to ground. 4. Check the terminal resistance from CAN 1 on diagnostic connector X001 between Pin 4 (CAN 1 H) and Pin 3 (CAN 1 L). This should be 120 ohm. 5. Exchange joystick.

Code	KNC	Designation	SPN	FMI	Alarm text	Information text What kind of error has occurred?	Error diagnosis text
980	S031	Push button/scroll wheel error	518980	2	Signal faulty or implausible	S031: CAN – Joystick III. Control circuit/quick change plate, lock/unlock scroll wheel (B/A) – data faulty or not plausible	Check the supply voltage for the joystick: 1. Check the line from joystick D002 Pin 2 to XP03 Pin 7 via fuse F010 (3A) to clamp 30. 2. Check the line from joystick D002 Pin 3 to XP06 Pin 9 via fuse F032 (5A) to clamp 15. 3. Check the line from Joystick D002 Pin 1 to ground. 4. Exchange joystick.
				7	Missing response of mechanical system or incorrect setting	S031: CAN – Joystick III. Control circuit/quick change plate, lock/unlock scroll wheel (B/A) – mechanics do not respond/jammed actuated	
				19	Faulty communication between components	S031: CAN – Joystick III. Control circuit/quick change plate, lock/unlock scroll wheel (B/A) – faulty communication between components	Check the supply voltage for the joystick: 1. Check the line from joystick D002 Pin 2 to XP03 Pin 7 via fuse F010 (3A) to clamp 30. 2. Check the line from joystick D002 Pin 3 to XP06 Pin 9 via fuse F032 (5A) to clamp 15. 3. Check the line from Joystick D002 Pin 1 to ground. 4. Check the terminal resistance from CAN 1 on diagnostic connector X001 between Pin 4 (CAN 1 H) and Pin 3 (CAN 1 L). This should be 120 ohm. 5. Exchange joystick.
983	S034	Scroll wheel FWD error	518983	2	Signal faulty or implausible	S034: FNR joystick scroll wheel – data faulty or implausible	Check the supply voltage for the joystick: 1. Check the line from joystick D002 Pin 2 to XP03 Pin 7 via fuse F010 (3A) to clamp 30. 2. Check the line from joystick D002 Pin 3 to XP06 Pin 9 via fuse F032 (5A) to clamp 15. 3. Check the line from Joystick D002 Pin 1 to ground. 4. Exchange joystick.
				7	Missing response of mechanical system or incorrect setting	S034: FNR joystick scroll wheel – mechanics do not respond/jammed actuated	
				19	Faulty communication between components	S034: FNR joystick scroll wheel – faulty communication between components	Check the supply voltage for the joystick: 1. Check the line from joystick D002 Pin 2 to XP03 Pin 7 via fuse F010 (3A) to clamp 30. 2. Check the line from joystick D002 Pin 3 to XP06 Pin 9 via fuse F032 (5A) to clamp 15. 3. Check the line from Joystick D002 Pin 1 to ground. 4. Check the terminal resistance from CAN 1 on diagnostic connector X001 between Pin 4 (CAN 1 H) and Pin 3 (CAN 1 L). This should be 120 ohm. 5. Exchange joystick.
987	S038	Scroll wheel error telescope/ fourth control circuit	518987	2	Signal faulty or implausible	S038: Retract/extend telescopic arm scroll wheel – data faulty or implausible	Check the supply voltage for the joystick: 1. Check the line from joystick D002 Pin 2 to XP03 Pin 7 via fuse F010 (3A) to clamp 30. 2. Check the line from joystick D002 Pin 3 to XP06 Pin 9 via fuse F032 (5A) to clamp 15. 3. Check the line from Joystick D002 Pin 1 to ground. 4. Exchange joystick.
				7	Missing response of mechanical system or incorrect setting	S038: Extend/retract telescopic arm scroll wheel – mechanics do not respond/jammed actuated	
				19	Faulty communication between components	S038: Retract/extend telescopic arm scroll wheel – faulty communication between components	Check the supply voltage for the joystick: 1. Check the line from joystick D002 Pin 2 to XP03 Pin 7 via fuse F010 (3A) to clamp 30. 2. Check the line from joystick D002 Pin 3 to XP06 Pin 9 via fuse F032 (5A) to clamp 15. 3. Check the line from Joystick D002 Pin 1 to ground. 4. Check the terminal resistance from CAN 1 on diagnostic connector X001 between Pin 4 (CAN 1 H) and Pin 3 (CAN 1 L). This should be 120 ohm. 5. Exchange joystick.

Code	KNC	Designation	SPN	FMI	Alarm text	Information text What kind of error has occurred?	Error diagnosis text
989	S040	Error release push button quickhitch unlocking	518989	2	Signal faulty or implausible	S040 Quick hitch facility change-over contact release button – both signals – data faulty or implausible	1. Check the signal line from circuit breaker S040 Pin 3 (touch button n.o. - normally open) to control unit N004 Pin 221 (5…10 V sensor power). 2. Check the signal line from circuit breaker S040 Pin 1 (touch button n.o. - normally open) to control unit N004 Pin 117. 3. Check the signal line from circuit breaker S040 Pin 7 (touch button n.c. - normally closed) to control unit N004 Pin 221 (5…10 V sensor power). 2. Check the signal line from circuit breaker S040 Pin 5 (touch button n.c. - normally closed) to control unit N004 Pin 141.
				3	Signal range exceeded or short circuit against positive supply voltage	S040: SWP release button Signal 1 – short circuit to plus/high voltage or S040: SWP release button Signal 2 – short circuit to plus/high voltage	Signal 1: 1. Check the signal line from circuit breaker S040 Pin 3 (touch button n.o. - normally open) to control unit N004 Pin 221 (5…10 V sensor power). 2. Check the signal line from circuit breaker S040 Pin 1 (touch button n.o. - normally open) to control unit N004 Pin 117. Signal 2: 1. Check the signal line from circuit breaker S040 Pin 7 (touch button n.c. - normally closed) to control unit N004 Pin 221 (5…10 V sensor power). 2. Check the signal line from circuit breaker S040 Pin 5 (touch button n.c. - normally closed) to control unit N004 Pin 141.
				7	Missing response of mechanical system or incorrect setting	S040: Quick hitch facility release button -Signal 2 – missing response of mechanical system or incorrect setting	1. Check the signal line from circuit breaker S040 Pin 7 (touch button n.c. - normally closed) to control unit N004 Pin 221 (5…10 V sensor power). 2. Check the signal line from circuit breaker S040 Pin 5 (touch button n.c. - normally closed) to control unit N004 Pin 141.
015	S066	Neutral push button error	519015	7	Missing response of mechanical system or incorrect setting	S066: Joystick neutral switch – mechanics do not respond/jammed actuated	Check the supply voltage for the joystick: 1. Check the line from joystick D002 Pin 2 to XP03 Pin 7 via fuse F010 (3A) to clamp 30. 2. Check the line from joystick D002 Pin 3 to XP06 Pin 9 via fuse F032 (5A) to clamp 15. 3. Check the line from Joystick D002 Pin 1 to ground. 4. Exchange joystick.
				19	Faulty communication between components	S066: Joystick neutral switch – faulty communication between components	Check the supply voltage for the joystick: 1. Check the line from joystick D002 Pin 2 to XP03 Pin 7 via fuse F010 (3A) to clamp 30. 2. Check the line from joystick D002 Pin 3 to XP06 Pin 9 via fuse F032 (5A) to clamp 15. 3. Check the line from Joystick D002 Pin 1 to ground. 4. Check the terminal resistance from CAN 1 on diagnostic connector X001 between Pin 4 (CAN 1 H) and Pin 3 (CAN 1 L). This should be 120 ohm. 5. Exchange joystick.

Code	KNC	Designation	SPN	FMI	Alarm text	Information text What kind of error has occurred?	Error diagnosis text
033	S084	Bridging switch error	519033	2	Signal faulty or implausible	S084: Bridging of overload change-over contact – both signals – data faulty or implausible	1. Check the signal line from circuit breaker S084 Pin 3 (touch button n.o. - normally open) to control unit N004 Pin 221 (5…10 V sensor power). 2. Check the signal line from circuit breaker S084 Pin 1 (touch button n.o. - normally open) to control unit N004 Pin 116. 3. Check the signal line from circuit breaker S084 Pin 7 (touch button n.c. - normally closed) to control unit N004 Pin 221 (5…10 V sensor power). 4. Check the signal line from circuit breaker S084 Pin 5 (touch button n.c. - normally closed) to control unit N004 Pin 140.
				3	Signal range exceeded or short circuit against positive supply voltage	S084: Bridging of overload change-over contact – Signal 1 – short circuit to plus/high voltage or S084: Bridging of overload change-over contact – Signal 2 – short circuit to plus/high voltage	Signal 1: 1. Check the signal line from circuit breaker S084 Pin 3 (touch button n.o. - normally open) to control unit N004 Pin 221 (5…10 V sensor power). 2. Check the signal line from circuit breaker S084 Pin 1 (touch button n.o. - normally open) to control unit N004 Pin 116. Signal 2: 1. Check the signal line from circuit breaker S084 Pin 7 (touch button n.c. - normally closed) to control unit N004 Pin 221 (5…10 V sensor power). 2. Check the signal line from circuit breaker S084 Pin 5 (touch button n.c. - normally closed) to control unit N004 Pin 140.
				7	Missing response of mechanical system or incorrect setting	S084: Bridging of overload change-over contact – both signals – missing response of mechanical system or incorrect setting	1. Check the signal line from circuit breaker S084 Pin 3 (touch button n.o. - normally open) to control unit N004 Pin 221 (5…10 V sensor power). 2. Check the signal line from circuit breaker S084 Pin 1 (touch button n.o. - normally open) to control unit N004 Pin 116. 3. Check the signal line from circuit breaker S084 Pin 7 (touch button n.c. - normally closed) to control unit N004 Pin 221 (5…10 V sensor power). 4. Check the signal line from circuit breaker S084 Pin 5 (touch button n.c. - normally closed) to control unit N004 Pin 140.
041	S092	Error front socket/bucket repositioning push button	519041	7	Missing response of mechanical system or incorrect setting	S092: Bucket repositioning joystick touch button – mechanics do not respond/jammed actuated	Check the supply voltage for the joystick: 1. Check the line from joystick D002 Pin 2 to XP03 Pin 7 via fuse F010 (3A) to clamp 30. 2. Check the line from joystick D002 Pin 3 to XP06 Pin 9 via fuse F032 (5A) to clamp 15. 3. Check the line from Joystick D002 Pin 1 to ground. 4. Exchange joystick.
				19	Faulty communication between components	S092: Bucket repositioning joystick touch button – faulty communication between components	Check the supply voltage for the joystick: 1. Check the line from joystick D002 Pin 2 to XP03 Pin 7 via fuse F010 (3A) to clamp 30. 2. Check the line from joystick D002 Pin 3 to XP06 Pin 9 via fuse F032 (5A) to clamp 15. 3. Check the line from Joystick D002 Pin 1 to ground. 4. Check the terminal resistance from CAN 1 on diagnostic connector X001 between Pin 4 (CAN 1 H) and Pin 3 (CAN 1 L). This should be 120 ohm. 5. Exchange joystick.

Code	KNC	Designation	SPN	FMI	Alarm text	Information text What kind of error has occurred?	Error diagnosis text
053	S104	Seat contact switch error	519053	2	Signal faulty or implausible	S104 Enabler, both signals, seat switch – signal faulty or implausible	1. Check the signal line from seat contact switch S104 Pin 1 via fuse F038 (25A) up to main fuse board 12V64A X2. 2. Check the signal line from seat contact switch S104 Pin 2 to ground. 3. Check signal line from S104 S1 from Pin 5 up to control unit N004 Pin 104. 4. Check signal line from S104 S1 from Pin 6 up to control unit N004 Pin 244. 5. Check the signal line from S104 S2 from Pin 3 via fuse F014 (3A) to clamp 15. 6. Check signal line from S104 S2 from Pin 4 up to control unit N004 Pin 139. 7. Check the resistor at circuit breaker S104. Control unit N004 must be disconnected: Resistance at S104 S1 when circuit breaker is open: approx. 510 ohm. Resistance at S104 S1 when circuit breaker is closed: approx. 98 ohm. Resistance at S104 S2 when circuit breaker is open: very high Resistance at S104 S2 when circuit breaker is open: very low (resistance specification at S2 0.1/∞)
				4	Under signal range or short circuit against machine ground / sensor ground	S104: Enabler, seat switch Signal 1 – threshold exceeded	1. Check the signal line from seat contact switch S104 Pin 1 via fuse F038 (25A) up to main fuse board 12V64A X2. 2. Check the signal line from seat contact switch S104 Pin 2 to ground. 3. Check signal line from S104 S1 from Pin 5 up to control unit N004 Pin 104. 4. Check signal line from S104 S1 from Pin 6 up to control unit N004 Pin 244. 5. Check the resistor at circuit breaker S104. Control unit N004 must be disconnected: Resistance at S104 S1 when circuit breaker is open: approx. 510 ohm. Resistance at S104 S1 when circuit breaker is closed: approx. 98 ohm.
				26	Signal outside the valid range	S104: Enabler, both signals of seat switch – outside valid range	1. Check the signal line from seat contact switch S104 Pin 1 via fuse F038 (25A) up to main fuse board 12V64A X2. 2. Check the signal line from seat contact switch S104 Pin 2 to ground. 3. Check signal line from S104 S1 from Pin 5 up to control unit N004 Pin 104. 4. Check signal line from S104 S1 from Pin 6 up to control unit N004 Pin 244. 5. Check the signal line from S104 S2 from Pin 3 via fuse F014 (3A) to clamp 15. 6. Check signal line from S104 S2 from Pin 4 up to control unit N004 Pin 139. 7. Check the resistor at circuit breaker S104. Control unit N004 must be disconnected: Resistance at S104 S1 when circuit breaker is open: approx. 510 ohm. Resistance at S104 S1 when circuit breaker is closed: approx. 98 ohm. Resistance at S104 S2 when circuit breaker is open: very high Resistance at S104 S2 when circuit breaker is open: very low (resistance specification at S2 0.1/∞)
053	S104	Seat contact switch error	519053	28	Open circuit or short circuit against positive supply voltage	S104: Enabler, seat switch Signal 1 – open wiring or short circuit to plus	1. Check the signal line from seat contact switch S104 Pin 1 via fuse F038 (25A) up to main fuse board 12V64A X2. 2. Check the signal line from seat contact switch S104 Pin 2 to ground. 3. Check signal line from S104 S1 from Pin 5 up to control unit N004 Pin 104. 4. Check signal line from S104 S1 from Pin 6 up to control unit N004 Pin 244. 5. Check the resistor at circuit breaker S104. Control unit N004 must be disconnected: Resistance at S104 S1 when circuit breaker is open: approx. 510 ohm. Resistance at S104 S1 when circuit breaker is closed: approx. 98 ohm.

Code	KNC	Designation	SPN	FMI	Alarm text	Information text What kind of error has occurred?	Error diagnosis text
058	S109	Error with electric circuit 1 touch button on Weidemann joystick	519058	7	Missing response of mechanical system or incorrect setting	S109: Electric circuit 1 touch button of Weidemann joystick – missing response of mechanical system or incorrect setting	Check the supply voltage for the joystick: 1. Check the line from joystick D002 Pin 2 to XP03 Pin 7 via fuse F010 (3A) to clamp 30. 2. Check the line from joystick D002 Pin 3 to XP06 Pin 9 via fuse F032 (5A) to clamp 15. 3. Check the line from Joystick D002 Pin 1 to ground. 4. Exchange joystick.
				19	Faulty communication between components	S109: Electric circuit 1 touch button of Weidemann joystick – faulty communication between components	
059	S110	Reversing valve touch button error	519059	7	Missing response of mechanical system or incorrect setting	S110: Reversing valve touch button on joystick – mechanics do not respond/jammed actuated	Check the supply voltage for the joystick: 1. Check the line from joystick D002 Pin 2 to XP03 Pin 7 via fuse F010 (3A) to clamp 30. 2. Check the line from joystick D002 Pin 3 to XP06 Pin 9 via fuse F032 (5A) to clamp 15. 3. Check the line from Joystick D002 Pin 1 to ground. 4. Exchange joystick.
				19	Faulty communication between components	S110: Reversing valve touch button on joystick – faulty communication between components	Check the supply voltage for the joystick: 1. Check the line from joystick D002 Pin 2 to XP03 Pin 7 via fuse F010 (3A) to clamp 30. 2. Check the line from joystick D002 Pin 3 to XP06 Pin 9 via fuse F032 (5A) to clamp 15. 3. Check the line from Joystick D002 Pin 1 to ground. 4. Check the terminal resistance from CAN 1 on diagnostic connector X001 between Pin 4 (CAN 1 H) and Pin 3 (CAN 1 L). This should be 120 ohm. 5. Exchange joystick.

Code	KNC	Designation	SPN	FMI	Alarm text	Information text What kind of error has occurred?	Error diagnosis text
065	S116	Telescopic arm terminal switch error	519065	2	Signal faulty or implausible	S116: Telescopic arm change-over contact terminal switch – both signals – data faulty or implausible	1. Check signal line from circuit breaker S116 Pin 3 (circuit breaker n.o.) to R023 Pin 7 GND. 2. Check signal line from circuit breaker S116 Pin 4 (circuit breaker n.o.) up to control unit N004 Pin 238. 3. Check signal line from circuit breaker S116 Pin 1 (circuit breaker n.c.) to R023 Pin 8 GND. 4. Check signal line from circuit breaker S116 Pin 2 (circuit breaker n.c.) up to control unit N004 Pin 251.
				3	Signal range exceeded or short circuit against positive supply voltage	S116: Telescopic arm change-over contact terminal switch – Signal 1 – short circuit to plus/ high voltage or S116: Telescopic arm change-over contact terminal switch – Signal 2 – short circuit to plus/ high voltage	Signal 1: 1. Check signal line from circuit breaker S116 Pin 3 (circuit breaker n.o.) to R023 Pin 7 GND. 2. Check signal line from circuit breaker S116 Pin 4 (circuit breaker n.o.) up to control unit N004 Pin 238. Signal 2: 1. Check signal line from circuit breaker S116 Pin 1 (circuit breaker n.c.) to R023 Pin 8 GND. 2. Check signal line from circuit breaker S116 Pin 2 (circuit breaker n.c.) up to control unit N004 Pin 251.
				24	Logical error/software	S116: Telescopic arm change-over contact terminal switch, Signal 2 – logical error/software	1. Change ignition 2. Check software version and update if necessary. 3. Check signal line from circuit breaker S116 Pin 1 (circuit breaker n.c.) up to control unit N004 Pin 217. 4. Check signal line from circuit breaker S116 Pin 2 (circuit breaker n.c.) up to control unit N004 Pin 251. 5. Check signal line from circuit breaker S116 Pin 3 (circuit breaker n.o.) up to control unit N004 Pin 251. 6. Check signal line from circuit breaker S116 Pin 4 (circuit breaker n.o.) up to control unit N004 Pin 238. 7. Repeat ignition change.
072	S123	Belt contact switch error	519072	3	Signal range exceeded or short circuit against positive supply voltage	S123: Belt contact switch – short circuit to plus/ high voltage	1. Check the signal line of belt contact switch S123 Pin A via fuse F014 (3A) up to clamp 15. 2. Check the signal line of belt contact switch S123 Pin B via resistor R936 (3K6) up to control unit N004 Pin 115. For checking the resistance of R936, control unit N004 must be disconnected. 3. Check signal line of belt contact switch S123 Pin C up to relay K110 Pin 3.
				26	Signal outside the valid range	S123: Belt contact switch – outside valid range	
				27	Open circuit or short circuit to ground.	S123: Belt contact switch – open wiring or short circuit to ground.	

Code	KNC	Designation	SPN	FMI	Alarm text	Information text What kind of error has occurred?	Error diagnosis text
084	S135	Snail travel mode joystick touch button error	519084	7	Missing response of mechanical system or incorrect setting	S135: Snail joystick touch button – missing response of mechanical system or incorrect setting	Check the supply voltage for the joystick: 1. Check the line from joystick D002 Pin 2 to XP03 Pin 7 via fuse F010 (3A) to clamp 30. 2. Check the line from joystick D002 Pin 3 to XP06 Pin 9 via fuse F032 (5A) to clamp 15. 3. Check the line from Joystick D002 Pin 1 to ground. 4. Exchange joystick.
				19	Faulty communication between components	S135: Snail joystick touch button – faulty communication between components	Check the supply voltage for the joystick: 1. Check the line from joystick D002 Pin 2 to XP03 Pin 7 via fuse F010 (3A) to clamp 30. 2. Check the line from joystick D002 Pin 3 to XP06 Pin 9 via fuse F032 (5A) to clamp 15. 3. Check the line from Joystick D002 Pin 1 to ground. 4. Check the terminal resistance from CAN 1 on diagnostic connector X001 between Pin 4 (CAN 1 H) and Pin 3 (CAN 1 L). This should be 120 ohm. 5. Exchange joystick.
085	S136	Hare travel mode joystick touch button error	519085	7	Missing response of mechanical system or incorrect setting	S136: Hare joystick touch button – missing response of mechanical system or incorrect setting	Check the supply voltage for the joystick: 1. Check the line from joystick D002 Pin 2 to XP03 Pin 7 via fuse F010 (3A) to clamp 30. 2. Check the line from joystick D002 Pin 3 to XP06 Pin 9 via fuse F032 (5A) to clamp 15. 3. Check the line from Joystick D002 Pin 1 to ground. 4. Exchange joystick.
				19	Faulty communication between components	S136: Hare joystick touch button – faulty communication between components	Check the supply voltage for the joystick: 1. Check the line from joystick D002 Pin 2 to XP03 Pin 7 via fuse F010 (3A) to clamp 30. 2. Check the line from joystick D002 Pin 3 to XP06 Pin 9 via fuse F032 (5A) to clamp 15. 3. Check the line from Joystick D002 Pin 1 to ground. 4. Check the terminal resistance from CAN 1 on diagnostic connector X001 between Pin 4 (CAN 1 H) and Pin 3 (CAN 1 L). This should be 120 ohm. 5. Exchange joystick.
086	S137	Auto hitch position switch error	519086	2	Signal faulty or implausible	S137: Auto hitch position switch – both signals – data faulty or implausible	1. Check the signal line of auto hitch position switch S137 Pin 4 via fuse F028 (3A) up to main fuse board 12V64A X2. 2. Check the signal line of auto hitch position switch S137 Pin 3 to ground. 3. Check signal line of auto hitch position switch S137 Pin 2 up to control unit N004 Pin 133. 4. Check signal line of auto hitch position switch S137 Pin 1 up to control unit N004 Pin 109.

Code	KNC	Designation	SPN	FMI	Alarm text	Information text What kind of error has occurred?	Error diagnosis text
109	S159	Raise triangle rear button error	519109	3	Signal range exceeded or short circuit against positive supply voltage	S159: Lifting mechanism, raise rear button – signal range exceeded or short circuit against positive supply voltage	1. Check the signal line of raise lifting mechanism rear button S159 Pin 1 via fuse F028 (3A) up to main fuse board 12V64A X2. 2. Check the signal line of raise lifting mechanism rear button S159 Pin 2 via resistor R933 (3K6) up to control unit N004 Pin 107. 3. If S159 is not actuated, a resistance of approx. 18 kOhm can be measured at the touch button for a disconnected control unit. This is internally connected in parallel to the touch button and resistor R933.
				7	Missing response of mechanical system or incorrect setting	S159: Lifting mechanism, raise rear button – mechanics do not respond/jammed actuated	
				26	Signal outside the valid range	S159: Rear lifting mechanism, raise rear button – outside valid range	
				27	Open circuit or short circuit to ground.	S159: Lifting mechanism, raise rear button – open circuit or short circuit to ground.	
110	S160	Lower triangle rear button error	519110	3	Signal range exceeded or short circuit against positive supply voltage	S160: Lifting mechanism, lower rear button – signal range exceeded or short circuit against positive supply voltage	1. Check the signal line of lifting mechanism rear button lower S160 Pin 1 via fuse F028 (3A) up to main fuse board 12V64A X2. 2. Check the signal line of lifting mechanism rear button lower S160 Pin 2 via resistor R934 (3K6) up to control unit N004 Pin 131. 3. If S160 is not actuated, a resistance of approx. 18 kOhm can be measured at the touch button for a disconnected control unit. This is internally connected in parallel to the touch button and resistor R933.
				7	Missing response of mechanical system or incorrect setting	S160: Lifting mechanism, lower rear button – mechanics do not respond/jammed actuated	
				26	Signal outside the valid range	S160: Rear lifting mechanism, raise rear button – outside valid range	
				27	Open circuit or short circuit to ground.	S160: Lifting mechanism, lower rear button – open circuit or short circuit to ground.	
120	S172	Bridging switch error	519120	4	Under signal range or short circuit against machine ground / sensor ground	S172: Crab steering mode lever switch- short circuit to ground./low voltage	1. Check the signal lines of crab steering mode lever switch S172 Pin A/2 up to control unit N004 Pin 230. 2. Check the signal line of crab steering mode lever switch S172 Pin 2 up to control unit N004 Pin 128.
				26	Signal outside the valid range	S172: Crab steering mode switch – outside valid range	
				28	Open circuit or short circuit against positive supply voltage	S172: Crab steering mode switch – open wiring or short circuit to plus	
123	S175	PTO ON/OFF rear button error	519123	3	Signal range exceeded or short circuit against positive supply voltage	S175: PTO rear button – short circuit to plus or high voltage	1. Check signal line from PTO rear button S175 Pin 1 to control unit N004 Pin 247. 2. Check the signal line from position PTO rear button S175 Pin 2 via resistor R935 (3K6) up to control unit N004 Pin 112. 3. Check the resistance at the touch button when this is not actuated and the control unit is disconnected. The resistance is approx. 18 kOhm.
				7	Missing response of mechanical system or incorrect setting	S175: PTO rear button – missing response of mechanical system or incorrect setting	
				26	Signal outside the valid range	S175: PTO rear button – outside valid range	
				27	Open circuit or short circuit to ground.	S175: PTO rear button – open wiring or short circuit to ground.	

Code	KNC	Designation	SPN	FMI	Alarm text	Information text What kind of error has occurred?	Error diagnosis text
303		14-pole front socket error	519303	2	Signal faulty or implausible	SA 0x22: 14-pole front socket, control unit machine control MVCU – data faulty or implausible	1. Check signal line from 14-pole front socket XX03 Pin G up to relay K095 Pin 2. 2. Check signal line from 14-pole front socket XX03 Pin H up to relay K096 Pin 2. 3. Check signal line from the 14-pole front socket XX03 Pin C up to relay K097 Pin 2. 4. Check signal line from the 14-pole front socket XX03 Pin D up to relay K098 Pin 2. 5. Check signal line from the 14-pole front socket XX03 Pin F up to relay K100 Pin 2. 6. Check signal line from the 14-pole front socket XX03 Pin E up to relay K101 Pin 2. 7. Check signal line from the 14-pole front socket XX03 Pin J up to relay K102 Pin 2.
				7	Missing response of mechanical system or incorrect setting	SA 0x22: 14-pole front socket, control unit machine control MVCU – mechanics do not respond/jammed actuated	
				9	Abnormal update rate	SA 0x22: 14-pole front socket, control unit machine control MVCU – time-out/abnormal clock rate	
				19	Faulty communication between components	SA 0x22: 14-pole front socket, control unit machine control MVCU – data reception with active error status	
351		Error Can reception AUX – XID 0x41 drive mode	519351	9	Abnormal update rate	AUX – XID 0x42: Gear shift, Can-Bus communication – time-out/abnormal clock rate	1. Ignition change. 2. Check the terminal resistance from CAN 1 on diagnostic connector X001 between Pin 4 (CAN 1 H) and Pin 3 (CAN 1 L). This should be 120 ohm.
				19	Faulty communication between components	AUX – XID 0x42: Gear shift, Can-Bus communication – data reception with active error status	
358	Y009	Error differential lock solenoid valve	519358	3	Signal range exceeded or short circuit against positive supply voltage	Y009: differential lock, lock changeover valve – short circuit against positive/high voltage	1. Check signal line from solenoid valve Y009 Pin 2 up to control unit N004 Pin 182. 2. Check the signal line from solenoid valve Y009 Pin 1 to ground.
				4	Under signal range or short circuit against machine ground / sensor ground	Y009: differential lock, lock changeover valve – short circuit against ground/low voltage	
				12	Control error (controller)	Y009: differential lock, lock changeover valve – internal error of control unit	1. Change ignition 2. Check software version and update if necessary. 3. Check the control unit connection, clean contacts 4. Read error memory with KADIAS, check whether additional error codes have been entered, save error memory. 5. Repeat ignition change.
				28	Open circuit or short circuit against positive supply voltage	Y009: Differential lock, lock changeover valve - Open wiring or short circuit to plus	1. Check signal line from solenoid valve Y009 Pin 2 up to control unit N004 Pin 182. 2. Check the signal line from solenoid valve Y009 Pin 1 to ground.
365	Y016	Solenoid valve 3rd control circuit, lock quickhitch error	519365	6	Current too high or short circuit against machine ground	Y016: III. Control circuit/quick change plate, lock proportional valve – current too high or short circuit against vehicle ground	1. Check signal line from solenoid valve Y016 Pin 2 up to control unit N004 Pin 154. 2. Check the signal line from solenoid valve Y016 Pin 1 to ground.
				12	Control error (controller)	Y016: III. Control circuit/quick change plate, lock proportional valve – internal error of control unit	1. Change ignition 2. Check software version and update if necessary. 3. Check the control unit connection, clean contacts 4. Read error memory with KADIAS, check whether additional error codes have been entered, save error memory. 5. Repeat ignition change.
				26	Signal outside the valid range	Y016: III. Control circuit/quick change plate, lock proportional valve – outside valid range	1. Check signal line from solenoid valve Y016 Pin 2 up to control unit N004 Pin 154. 2. Check the signal line from solenoid valve Y016 Pin 1 to ground.
				28	Open circuit or short circuit against positive supply voltage	Y016: III. Control circuit/quick change plate, lock proportional valve – open wiring/current low	

Code	KNC	Designation	SPN	FMI	Alarm text	Information text What kind of error has occurred?	Error diagnosis text
366	Y017	Solenoid valve 3rd control circuit, unlock quickhitch error	519366	6	Current too high or short circuit against machine ground	Y017: III. Control circuit/quick change plate, unlock proportional valve – current too high or short circuit against vehicle ground	1. Check signal line from solenoid valve Y017 Pin 2 up to control unit N004 Pin 178. 2. Check the signal line from solenoid valve Y017 Pin 1 to ground.
				12	Control error (controller)	Y017: III. Control circuit/quick change plate, unlock proportional valve – internal error of control unit	1. Change ignition 2. Check software version and update if necessary. 3. Check the control unit connection, clean contacts 4. Read error memory with KADIAS, check whether additional error codes have been entered, save error memory. 5. Repeat ignition change.
				26	Signal outside the valid range	Y017: III. Control circuit/quick change plate, unlock proportional valve – outside valid range	1. Check signal line from solenoid valve Y017 Pin 2 up to control unit N004 Pin 178. 2. Check the signal line from solenoid valve Y017 Pin 1 to ground.
				28	Open circuit or short circuit against positive supply voltage	Y017: III. Control circuit/quick change plate, unlock proportional valve – open wiring/current low	
369	Y020	Load stabiliser solenoid valve error	519369	3	Signal range exceeded or short circuit against positive supply voltage	Y020: load stabiliser, changeover valve activation – short circuit to plus/high voltage	1. Check signal line from solenoid valve Y020 Pin 2 up to control unit N004 Pin 177. 2. Check the signal line from solenoid valve Y020 Pin 1 to ground.
				4	Under signal range or short circuit against machine ground / sensor ground	Y020: load stabiliser, activation changeover valve – short circuit against ground/low voltage	
				12	Control error (controller)	Y020: load stabiliser, activation changeover valve – internal error of control unit	1. Change ignition 2. Check software version and update if necessary. 3. Check the control unit connection, clean contacts 4. Read error memory with KADIAS, check whether additional error codes have been entered, save error memory. 5. Repeat ignition change.
				28	Open circuit or short circuit against positive supply voltage	Y020: Load stabiliser, activation changeover valve - open wiring or short circuit to plus	1. Check signal line from solenoid valve Y020 Pin 2 up to control unit N004 Pin 177. 2. Check the signal line from solenoid valve Y020 Pin 1 to ground.
370	Y021	Load stabiliser solenoid valve error	519370	3	Signal range exceeded or short circuit against positive supply voltage	Y021: load stabiliser, activation changeover valve – short circuit against positive/high voltage	1. Check signal line from solenoid valve Y021 Pin 2 up to control unit N004 Pin 156. 2. Check the signal line from solenoid valve Y021 Pin 1 to ground.
				4	Under signal range or short circuit against machine ground / sensor ground	Y021: load stabiliser, activation changeover valve – short circuit against ground/low voltage	
				12	Control error (controller)	Y021: load stabiliser, activation changeover valve – internal error of control unit	1. Change ignition 2. Check software version and update if necessary. 3. Check the control unit connection, clean contacts 4. Read error memory with KADIAS, check whether additional error codes have been entered, save error memory. 5. Repeat ignition change.
				28	Open circuit or short circuit against positive supply voltage	Y021: Load stabiliser, activation changeover valve - open wiring or short circuit to plus	1. Check signal line from solenoid valve Y021 Pin 2 up to control unit N004 Pin 156. 2. Check the signal line from solenoid valve Y021 Pin 1 to ground.

Code	KNC	Designation	SPN	FMI	Alarm text	Information text What kind of error has occurred?	Error diagnosis text
372	Y023	Solenoid valve (retract telescopic boom) error	519372	2	Signal faulty or implausible	Y023: Retract telescope, proportional valve – signal faulty or implausible	1. Check signal line from solenoid valve Y023 Pin 2 up to control unit N004 Pin 165. 2. Check the signal line from solenoid valve Y023 Pin 1 to ground.
				6	Current too high or short circuit against machine ground	Y023: Telescopic boom, retract proportional valve - short circuit to ground / high current	
				12	Control error (controller)	Y023: Telescopic boom, retract proportional valve - internal control unit error	1. Change ignition 2. Check software version and update if necessary. 3. Check the control unit connection, clean contacts 4. Read error memory with KADIAS, check whether additional error codes have been entered, save error memory. 5. Repeat ignition change.
				26	Signal outside the valid range	Y023: Retract telescope, proportional valve – outside valid range	1. Check signal line from solenoid valve Y023 Pin 2 up to control unit N004 Pin 165. 2. Check the signal line from solenoid valve Y023 Pin 1 to ground.
				28	Open circuit or short circuit against positive supply voltage	Y023: Telescopic boom, retract proportional valve - open wiring or short circuit to plus	
373	Y024	Solenoid valve (extend telescopic boom) error	519373	6	Current too high or short circuit against machine ground	Y024: Telescope, extend proportional valve – short circuit to ground./low voltage	1. Check signal line from solenoid valve Y023 Pin 2 up to control unit N004 Pin 165. 2. Check the signal line from solenoid valve Y023 Pin 1 to ground.
				12	Control error (controller)	Y024: Telescopic boom, extend proportional valve - internal control unit error	1. Change ignition 2. Check software version and update if necessary. 3. Check the control unit connection, clean contacts 4. Read error memory with KADIAS, check whether additional error codes have been entered, save error memory. 5. Repeat ignition change.
				26	Signal outside the valid range	Y024: Extend telescope, proportional valve – outside valid range	1. Change ignition 2. Check software version and update if necessary. 3. Check the solenoid valve. 4. Check the plug connection on the solenoid valve and the wiring harness for damage
				28	Open circuit or short circuit against positive supply voltage	Y024: Telescopic boom, extend proportional valve - open wiring or short circuit to plus	
374	Y025	Solenoid valve for quickhitch unlock error	519374	3	Signal range exceeded or short circuit against positive supply voltage	Y025: Quick hitch system, release relay valve lock – signal range exceeded or short circuit against positive supply voltage	1. Check signal line from solenoid valve Y025 Pin 2 up to control unit N004 Pin 184. 2. Check the signal line from solenoid valve Y025 Pin 1 to ground.
				4	Under signal range or short circuit against machine ground / sensor ground	Y025: quickhitch lock, lock-release changeover valve – short circuit against ground/low voltage	
				12	Control error (controller)	Y025: quickhitch lock, lock-release changeover valve – internal error of control unit	1. Change ignition 2. Check software version and update if necessary. 3. Check the control unit connection, clean contacts 4. Read error memory with KADIAS, check whether additional error codes have been entered, save error memory. 5. Repeat ignition change.
				28	Open circuit or short circuit against positive supply voltage	Y025: Quickhitch lock, lock release changeover valve - open wiring or short circuit to plus	1. Check signal line from solenoid valve Y025 Pin 2 up to control unit N004 Pin 184. 2. Check the signal line from solenoid valve Y025 Pin 1 to ground.

Code	KNC	Designation	SPN	FMI	Alarm text	Information text What kind of error has occurred?	Error diagnosis text
384	Y035	Fan solenoid valve error	519384	3	Signal range exceeded or short circuit against positive supply voltage	Y035: Fan solenoid valve – signal range exceeded or short circuit against positive supply voltage	1. Check signal line at fan solenoid valve Y035 Pin 2 up to control unit N004 Pin 157. 2. Check signal line at fan solenoid valve Y035 Pin 1 to ground.
				4	Under signal range or short circuit against machine ground / sensor ground	Y035: Fan solenoid valve – signal range undershot or circuit against machine ground/sensor ground	
				12	Control error (controller)	Y035: Fan solenoid valve – internal error of control unit	1. Change ignition 2. Check software version and update if necessary. 3. Check the control unit connection, clean contacts 4. Read error memory with KADIAS, check whether additional error codes have been entered, save error memory. 5. Repeat ignition change.
				28	Open circuit or short circuit against positive supply voltage	Y035: Fan solenoid valve – open wiring or short circuit to plus	1. Check signal line at fan solenoid valve Y035 Pin 2 up to control unit N004 Pin 157. 2. Check signal line at fan solenoid valve Y035 Pin 1 to ground.
386	Y037	Reversing fan solenoid valve error	519386	3	Signal range exceeded or short circuit against positive supply voltage	Y037: Reversing fan solenoid valve – signal range exceeded or short circuit against positive supply voltage	1. Check signal line at solenoid valve reversible fan Y037 Pin 2 up to control unit N004 Pin 163. 2. Check the signal line at solenoid valve reversible fan Y037 Pin 1 to ground.
				4	Under signal range or short circuit against machine ground / sensor ground	Y037: Reversing fan solenoid valve- short circuit to ground./low voltage	
				12	Control error (controller)	Y037: Reversing fan solenoid valve – internal error of control unit	1. Change ignition 2. Check software version and update if necessary. 3. Check the control unit connection, clean contacts 4. Read error memory with KADIAS, check whether additional error codes have been entered, save error memory. 5. Repeat ignition change.
				28	Open circuit or short circuit against positive supply voltage	Y037: Reversing fan solenoid valve – open wiring or short circuit to plus	1. Check signal line at solenoid valve reversible fan Y037 Pin 2 up to control unit N004 Pin 163. 2. Check the signal line at solenoid valve reversible fan Y037 Pin 1 to ground.
393	Y044	Raise tipper/hitch solenoid valve error	519393	6	Current too high or short circuit against machine ground	Y044: Raise tipper/hitch solenoid valve – current too high or short circuit against vehicle ground	1. Check signal line at raise tipper/hitch solenoid valve Y044 Pin 2 up to control unit N004 Pin 183. 2. Check the signal line at raise tipper/hitch solenoid valve Y044 Pin 1 to ground.
				12	Control error (controller)	Y044: Raise tipper/hitch solenoid valve – internal error of control unit	1. Change ignition 2. Check software version and update if necessary. 3. Check the control unit connection, clean contacts 4. Read error memory with KADIAS, check whether additional error codes have been entered, save error memory. 5. Repeat ignition change.
				26	Signal outside the valid range	Y044: Raise tipper/hitch solenoid valve – outside valid range	1. Check signal line at raise tipper/hitch solenoid valve Y044 Pin 2 up to control unit N004 Pin 183. 2. Check the signal line at raise tipper/hitch solenoid valve Y044 Pin 1 to ground.
				28	Open circuit or short circuit against positive supply voltage	Y044: Raise tipper/hitch solenoid valve – open wiring or current low	

Code	KNC	Designation	SPN	FMI	Alarm text	Information text What kind of error has occurred?	Error diagnosis text
394	Y045	Solenoid valve tipper/lower hitch error	519394	6	Current too high or short circuit against machine ground	Y045: Lower tipper/hitch solenoid valve – current too high or short circuit against vehicle ground	1. Check signal line at solenoid valve tipper/lower hitch Y045 Pin 2 up to control unit N004 Pin 186. 2. Check the signal line solenoid valve tipper/lower hitch Y045 Pin 1 to ground.
				12	Control error (controller)	Y045: Solenoid valve tipper/lower hitch – internal error of control unit	1. Change ignition 2. Check software version and update if necessary. 3. Check the control unit connection, clean contacts 4. Read error memory with KADIAS, check whether additional error codes have been entered, save error memory. 5. Repeat ignition change.
				26	Signal outside the valid range	Y045: Lower tipper/hitch solenoid valve – outside valid range	1. Check signal line at solenoid valve tipper/lower hitch Y045 Pin 2 up to control unit N004 Pin 186. 2. Check the signal line at solenoid valve tipper/lower hitch Y045 Pin 1 to ground.
				28	Open circuit or short circuit against positive supply voltage	Y045: Lower tipper/hitch solenoid valve – open wiring or current low	
395	Y046	Rear hydraulics reversing valve error	519395	3	Signal range exceeded or short circuit against positive supply voltage	Y046: Rear hydraulics reversing valve – short circuit to plus/high voltage	1. Check signal line at rear hydraulics solenoid valve Y046 Pin 2 up to control unit N004 Pin 159. 2. Check the signal line at rear hydraulics solenoid valve Y046 Pin 1 to ground.
				4	Under signal range or short circuit against machine ground / sensor ground	Y046: Rear hydraulics reversing valve – signal range undershot or circuit against machine ground/sensor ground	
				12	Control error (controller)	Y046: Rear hydraulics reversing valve – internal error of control unit	1. Change ignition 2. Check software version and update if necessary. 3. Check the control unit connection, clean contacts 4. Read error memory with KADIAS, check whether additional error codes have been entered, save error memory. 5. Repeat ignition change.
				28	Open circuit or short circuit against positive supply voltage	Y046: Rear hydraulics reversing valve – open wiring or current low	1. Check signal line at rear hydraulics solenoid valve Y046 Pin 2 up to control unit N004 Pin 159. 2. Check the signal line at rear hydraulics solenoid valve Y046 Pin 1 to ground.
396	Y047	Unlock auto hitch solenoid valve error	519396	3	Signal range exceeded or short circuit against positive supply voltage	Y047: Unlock auto hitch solenoid valve- short circuit to plus/voltage high	1. Check signal line at raise triangle solenoid valve Y047 Pin 2 up to control unit N004 Pin 166. 2. Check the signal line at raise triangle solenoid valve Y047 Pin 1 to ground.
				4	Under signal range or short circuit against machine ground / sensor ground	Y047: Unlock auto hitch solenoid valve- short circuit to ground./low voltage	
				12	Control error (controller)	Y047: Unlock auto hitch solenoid valve – internal error of control unit	1. Change ignition 2. Check software version and update if necessary. 3. Check the control unit connection, clean contacts 4. Read error memory with KADIAS, check whether additional error codes have been entered, save error memory. 5. Repeat ignition change.
				28	Open circuit or short circuit against positive supply voltage	Y047: Unlock auto hitch solenoid valve – open wiring or short circuit to plus	1. Check signal line at raise triangle solenoid valve Y047 Pin 2 up to control unit N004 Pin 166. 2. Check the signal line at raise triangle solenoid valve Y047 Pin 1 to ground.

Code	KNC	Designation	SPN	FMI	Alarm text	Information text What kind of error has occurred?	Error diagnosis text
400	Y051	Error with reversing valve of third Control circuit	519400	3	Signal range exceeded or short circuit against positive supply voltage	YO51 Reversing valve of third Control circuit – signal range exceeded or short circuit against positive supply voltage	1. Check signal line from solenoid valve Y051 Pin 2 up to control unit N004 Pin 190. 2. Check the signal line from solenoid valve Y051 Pin 1 to ground.
				4	Under signal range or short circuit against machine ground / sensor ground	YO51 Reversing valve of third Control circuit – short circuit to ground./low voltage	
				12	Control error (controller)	YO51 Reversing valve of third Control circuit – internal error of control unit	1. Change ignition 2. Check software version and update if necessary. 3. Check the control unit connection, clean contacts 4. Read error memory with KADIAS, check whether additional error codes have been entered, save error memory. 5. Repeat ignition change.
				28	Open circuit or short circuit against positive supply voltage	YO51 Reversing valve of third Control circuit – open wiring/low current	1. Check signal line from solenoid valve Y051 Pin 2 up to control unit N004 Pin 190. 2. Check the signal line from solenoid valve Y051 Pin 1 to ground.
415	Y066	Raise lifting arm solenoid valve error	519415	6	Current too high or short circuit against machine ground	Y066: Raise lifting arm solenoid valve – short circuit to ground./current high	1. Check signal line at raise lifting arm solenoid valve Y066 Pin 2 up to control unit N004 Pin 192. 2. Check the signal line at raise lifting arm solenoid valve Y066 Pin 1 to ground.
				12	Control error (controller)	Y066: Raise lifting arm solenoid valve – internal error of control unit	1. Change ignition 2. Check software version and update if necessary. 3. Check the control unit connection, clean contacts 4. Read error memory with KADIAS, check whether additional error codes have been entered, save error memory. 5. Repeat ignition change.
				26	Signal outside the valid range	Y066: Raise lifting arm solenoid valve – outside valid range	1. Check signal line at raise lifting arm solenoid valve Y066 Pin 2 up to control unit N004 Pin 192. 2. Check the signal line at raise lifting arm solenoid valve Y066 Pin 1 to ground. 3. Calibrate lifting arm. 4. Change ignition
				28	Open circuit or short circuit against positive supply voltage	Y066: Raise lifting arm solenoid valve – open wiring or short circuit to plus	1. Check signal line at raise lifting arm solenoid valve Y066 Pin 2 up to control unit N004 Pin 192. 2. Check the signal line at raise lifting arm solenoid valve Y066 Pin 1 to ground.

Code	KNC	Designation	SPN	FMI	Alarm text	Information text What kind of error has occurred?	Error diagnosis text
416	Y067	Lower lifting arm solenoid valve error	519416	6	Current too high or short circuit against machine ground	Y067: Lower lifting arm solenoid valve – short circuit to ground./current high	1. Check signal line at lower lifting arm solenoid valve Y067 Pin 2 up to control unit N004 Pin 168. 2. Check signal line at hydraulics solenoid valve Raise trailer brake Y067 Pin 1 to ground.
				12	Control error (controller)	Y067: Lower lifting arm solenoid valve – internal error of control unit	1. Change ignition 2. Check software version and update if necessary. 3. Check the control unit connection, clean contacts 4. Read error memory with KADIAS, check whether additional error codes have been entered, save error memory. 5. Repeat ignition change.
				26	Signal outside the valid range	Y067: Lower lifting arm solenoid valve – outside valid range	1. Check signal line at lower lifting arm solenoid valve Y067 Pin 2 up to control unit N004 Pin 168. 2. Check signal line at hydraulics solenoid valve Raise trailer brake Y067 Pin 1 to ground. 3. Calibrate lifting arm. 4. Change ignition
				28	Open circuit or short circuit against positive supply voltage	Y067: Lower lifting arm solenoid valve – open wiring or short circuit to plus	1. Check signal line at lower lifting arm solenoid valve Y067 Pin 2 up to control unit N004 Pin 168. 2. Check signal line at hydraulics solenoid valve Raise trailer brake Y067 Pin 1 to ground.
417	Y068	Fill shovel solenoid valve error	519417	6	Current too high or short circuit against machine ground	Y068: Fill shovel solenoid valve – short circuit to ground./current high	1. Check the signal line at empty shovel solenoid valve Y068 Pin 2 up to control unit N004 Pin 195. 2. Check the signal line at empty shovel solenoid valve Y068 Pin 1 to ground.
				12	Control error (controller)	Y068: Fill shovel solenoid valve error internal error of control unit	1. Change ignition 2. Check software version and update if necessary. 3. Check the control unit connection, clean contacts 4. Read error memory with KADIAS, check whether additional error codes have been entered, save error memory. 5. Repeat ignition change.
				26	Signal outside the valid range	Y068: Fill shovel solenoid valve error – outside valid range	1. Check the signal line at empty shovel solenoid valve Y068 Pin 2 up to control unit N004 Pin 195. 2. Check the signal line at empty shovel solenoid valve Y068 Pin 1 to ground.
				28	Open circuit or short circuit against positive supply voltage	Y068: Fill shovel solenoid valve – open wiring or short circuit to plus	
418	Y069	Empty shovel solenoid valve error	519418	6	Current too high or short circuit against machine ground	Y069: Empty shovel solenoid valve – short circuit to ground./current high	1. Check the signal line at empty shovel solenoid valve Y069 Pin 2 up to control unit N004 Pin 171. 2. Check the signal line at empty shovel solenoid valve Y069 Pin 1 to ground.
				12	Control error (controller)	Y069: Empty shovel solenoid valve – internal error of control unit	1. Change ignition 2. Check software version and update if necessary. 3. Check the control unit connection, clean contacts 4. Read error memory with KADIAS, check whether additional error codes have been entered, save error memory. 5. Repeat ignition change.
				26	Signal outside the valid range	Y069: Empty shovel solenoid valve – outside valid range	1. Check the signal line at empty shovel solenoid valve Y069 Pin 2 up to control unit N004 Pin 171. 2. Check the signal line at empty shovel solenoid valve Y069 Pin 1 to ground.
				28	Open circuit or short circuit against positive supply voltage	Y069: Empty shovel solenoid valve – open wiring or short circuit to plus	

Code	KNC	Designation	SPN	FMI	Alarm text	Information text What kind of error has occurred?	Error diagnosis text
461	Y113	Hydraulics solenoid valve error Trailer brake	519461	3	Signal range exceeded or short circuit against positive supply voltage	Y113: Hydraulics solenoid valve Trailer brake – short circuit to positive / voltage high	1. Check signal line at hydraulics solenoid valve Raise trailer brake Y113 Pin 2 up to control unit N004 Pin 160. 2. Check signal line at hydraulics solenoid valve Raise trailer brake Y113 Pin 1 to ground.
				4	Under signal range or short circuit against machine ground / sensor ground	Y113: Hydraulics solenoid valve Trailer brake – short circuit to ground./voltage low	
				12	Control error (controller)	Y113: Hydraulics solenoid valve Trailer brake – internal error of control unit	1. Change ignition 2. Check software version and update if necessary. 3. Check the control unit connection, clean contacts 4. Read error memory with KADIAS, check whether additional error codes have been entered, save error memory. 5. Repeat ignition change.
				28	Open circuit or short circuit against positive supply voltage	Y113: Hydraulics solenoid valve Trailer brake – open wiring or short circuit to plus	1. Check signal line at hydraulics solenoid valve Raise trailer brake Y113 Pin 2 up to control unit N004 Pin 160. 2. Check signal line at hydraulics solenoid valve Raise trailer brake Y113 Pin 1 to ground.
464	Y116	Lower tipper solenoid valve error	519464	3	Signal range exceeded or short circuit against positive supply voltage	Y116: Lower tipper solenoid valve – short circuit to plus/voltage high	1. Check signal line at lower tipper solenoid valve Y116 Pin 2 up to control unit N004 Pin 181. 2. Check the signal line at empty shovel solenoid valve Y116 Pin 1 to ground.
				4	Under signal range or short circuit against machine ground / sensor ground	Y116: Lower tipper solenoid valve – signal range undershot or circuit against machine ground/sensor ground	
				12	Control error (controller)	Y116: Lower tipper solenoid valve – internal error of control unit	1. Change ignition 2. Check software version and update if necessary. 3. Check the control unit connection, clean contacts 4. Read error memory with KADIAS, check whether additional error codes have been entered, save error memory. 5. Repeat ignition change.
				28	Open circuit or short circuit against positive supply voltage	Y116: Lower tipper solenoid valve – open wiring or current low	1. Check signal line at lower tipper solenoid valve Y116 Pin 2 up to control unit N004 Pin 181. 2. Check the signal line at empty shovel solenoid valve Y116 Pin 1 to ground.
465	Y117	Raise triangle solenoid valve error	519465	6	Current too high or short circuit against machine ground	Y117: Raise triangle solenoid valve – short circuit to ground./current high	1. Check signal line at raise triangle solenoid valve Y117 Pin 2 up to control unit N004 Pin 172. 2. Check the signal line at raise triangle solenoid valve Y117 Pin 1 to ground.
				12	Control error (controller)	Y117: Raise triangle solenoid valve – control error (controller)	1. Change ignition 2. Check software version and update if necessary. 3. Check the control unit connection, clean contacts 4. Read error memory with KADIAS, check whether additional error codes have been entered, save error memory. 5. Repeat ignition change.
				28	Open circuit or short circuit against positive supply voltage	Y117: Raise triangle solenoid valve – open wiring or short circuit to plus	1. Check signal line at raise triangle solenoid valve Y117 Pin 2 up to control unit N004 Pin 172. 2. Check the signal line at raise triangle solenoid valve Y117 Pin 1 to ground.

Code	KNC	Designation	SPN	FMI	Alarm text	Information text What kind of error has occurred?	Error diagnosis text
466	Y118	Lower triangle solenoid valve error	519466	6	Current too high or short circuit against machine ground	Y118: Lower triangle solenoid valve – short circuit to ground./current high	1. Check signal line at lower triangle solenoid valve Y118 Pin 2 up to control unit N004 Pin 172. 2. Check the signal line at lower triangle solenoid valve Y118 Pin 1 to ground.
				12	Control error (controller)	Y118: Lower triangle – control error (controller)	1. Change ignition 2. Check software version and update if necessary. 3. Check the control unit connection, clean contacts 4. Read error memory with KADIAS, check whether additional error codes have been entered, save error memory. 5. Repeat ignition change.
				28	Open circuit or short circuit against positive supply voltage	Y118: Lower triangle solenoid valve – open wiring or short circuit to plus	1. Check signal line at lower triangle solenoid valve Y118 Pin 2 up to control unit N004 Pin 172. 2. Check the signal line at lower triangle solenoid valve Y118 Pin 1 to ground.
468	Y120	PTO solenoid valve error	519468	6	Current too high or short circuit against machine ground	Y120: PTO solenoid valve – short circuit to ground./current high	1. Check signal line at PTO solenoid valve Y120 Pin 2 up to control unit N004 Pin 193. 2. Check the signal line at empty shovel solenoid valve Y120 Pin 1 to ground.
				12	Control error (controller)	Y120: PTO solenoid valve – internal error of control unit	1. Change ignition 2. Check software version and update if necessary. 3. Check the control unit connection, clean contacts 4. Read error memory with KADIAS, check whether additional error codes have been entered, save error memory. 5. Repeat ignition change.
				26	Signal outside the valid range	Y120: PTO solenoid valve – outside valid range	1. Check signal line at PTO solenoid valve Y120 Pin 2 up to control unit N004 Pin 193. 2. Check the signal line at empty shovel solenoid valve Y120 Pin 1 to ground.
				28	Open circuit or short circuit against positive supply voltage	Y120: PTO solenoid valve – open wiring or short circuit to plus	
477	Y129	Rear hydraulics lowering mode solenoid valve error	519477	3	Signal range exceeded or short circuit against positive supply voltage	Y129: Rear hydraulics lowering mode solenoid valve – short circuit to plus/voltage high	1. Check signal line at rear hydraulics lowering mode solenoid valve Y129 Pin 2 up to control unit N004 Pin 162. 2. Check the signal line at rear hydraulics lowering mode solenoid valve Y129 Pin 1 to ground.
				4	Under signal range or short circuit against machine ground / sensor ground	Y129: Rear hydraulics lowering mode solenoid valve – short circuit to ground./low voltage	
				12	Control error (controller)	Y129: Rear hydraulics lowering mode solenoid valve – internal error of control unit	1. Change ignition 2. Check software version and update if necessary. 3. Check the control unit connection, clean contacts 4. Read error memory with KADIAS, check whether additional error codes have been entered, save error memory. 5. Repeat ignition change.
				28	Open circuit or short circuit against positive supply voltage	Y129: Rear hydraulics lowering mode solenoid valve – open wiring or short circuit to plus	1. Check signal line at rear hydraulics lowering mode solenoid valve Y129 Pin 2 up to control unit N004 Pin 162. 2. Check the signal line at rear hydraulics lowering mode solenoid valve Y129 Pin 1 to ground.
850	K101	Chute UP switching relay error	519850	2	Signal faulty or implausible	K101: 7-pole front socket of switching relay Chute UP – Signal faulty or erratic	1. Check signal line of switching relay 7-pole front socket K101 Pin 3 up to control unit N004 Pin 155. 2. Check the signal line of switching relay 7-pole front socket K101 Pin 5 to ground.

Code	KNC	Designation	SPN	FMI	Alarm text	Information text What kind of error has occurred?	Error diagnosis text
851	K102	Step-by-step relay touch button error	519851	2	Signal faulty or implausible	K102: 7-pole front socket of step-by-step relay touch button – signal faulty or erratic	1. Check signal line of switching relay 7-pole front socket K101 Pin 3 up to control unit N004 Pin 179. 2. Check the signal line of switching relay 7-pole front socket K101 Pin 5 to ground.
902	R002	Error CAN reception (inching pedal position)	519902	9	Abnormal update rate	R002: Service brake, Can bus communication - timeout / abnormal clock rate	1. Ignition change. 2. Recalibrate inching pedal 3. Check the connections and the cabling of the inching pedal 4. Check signal line of inching pedal R002 Pin 1 and Pin 4 up to control unit N001 Pin 5. 5. Check signal line of inching pedal R002 Pin 7 and Pin 8 up to control unit N001 Pin 6. 6. Check signal line of inching pedal R002 Pin 2 up to control unit N001 Pin 7. 7. Check signal line of inching pedal R002 Pin 5 up to control unit N001 Pin 1. 8. Exchange inching pedal sensor.
				19	Faulty communication between components	R002: Service brake, Can bus communication - data reception with active error status	
911	R011	Accelerator pedal signal 1 error	519911	2	Signal faulty or implausible	R011: travel direction, potentiometer pedal – both signals, incorrect or implausible data	Check the signal lines of gas pedal potentiometer R011 S1: 1. Check from R011 Pin 1 to control unit N004 Pin 247 (5V Sensor +). 2. Check from R011 Pin 3 up to control unit N004 Pin 245 (Sensor GND). 3. Check from R011 Pin 2 up to control unit N004 Pin 110. Check the signal lines of gas pedal potentiometer R011 S2: 4. Check from R011 Pin 6 to control unit N004 Pin 247 (5V Sensor +). 5. Check from R011 Pin 4 up to control unit N004 Pin 256 (Sensor GND). 6. Check from R011 Pin 5 up to control unit N004 Pin 134.
				3	Signal range exceeded or short circuit against positive supply voltage	R011: Travel direction, pedal potentiometer - Signal 1 short circuit to positive / high voltage	Check the signal lines of gas pedal potentiometer R011 S1: 1. Check from R011 Pin 1 to control unit N004 Pin 247 (5V Sensor +). 2. Check from R011 Pin 3 up to control unit N004 Pin 245 (Sensor GND). 3. Check from R011 Pin 2 up to control unit N004 Pin 110.
				12	Control error (controller)	R011: Travel direction, pedal potentiometer – both signals – internal error of the control unit	1. Change ignition 2. Check software version and update if necessary. 3. Check the terminal resistance from CAN 0 on diagnostic connector X001 between Pin 2 (CAN 0 H) and Pin 1 (CAN 0 L). This should be 120 ohm. 4. Check the control unit connection, clean contacts. 5. Read error memory with KADIAS, check whether additional error codes have been entered, save error memory.
				26	Signal outside the valid range	R011: Travel direction, pedal potentiometer – outside valid range	Check the signal lines of gas pedal potentiometer R011 S1: 1. Check from R011 Pin 1 to control unit N004 Pin 247 (5V Sensor +). 2. Check from R011 Pin 3 up to control unit N004 Pin 245 (Sensor GND). 3. Check from R011 Pin 2 up to control unit N004 Pin 110. Check the signal lines of gas pedal potentiometer R011 S2: 4. Check from R011 Pin 6 to control unit N004 Pin 247 (5V Sensor +). 5. Check from R011 Pin 4 up to control unit N004 Pin 256 (Sensor GND). 6. Check from R011 Pin 5 up to control unit N004 Pin 134.
				27	Open circuit or short circuit to ground.	R011: Travel direction, pedal potentiometer - Signal 1 open wiring or short circuit to Ground	Check the signal lines of gas pedal potentiometer R011 S1: 1. Check from R011 Pin 1 to control unit N004 Pin 247 (5V Sensor +). 2. Check from R011 Pin 3 up to control unit N004 Pin 245 (Sensor GND). 3. Check from R011 Pin 2 up to control unit N004 Pin 110.

Code	KNC	Designation	SPN	FMI	Alarm text	Information text What kind of error has occurred?	Error diagnosis text
912	R012	Hand gas potentiometer error	519912	2	Signal faulty or implausible	R012: Hand gas potentiometer – both signals – data faulty or not plausible	Check the supply voltage for the hand gas joystick: 1. Check signal line from joystick R012 Pin 1 up to control unit N004 Pin 234 (5V Sensor +). 2. Check line from joystick R012 Pin 3 up to control unit N004 Pin 257 (SGND). 3. Check signal line from joystick R012 Pin 4 up to control unit N004 Pin 247 (5V Sensor +). 4. Check line from joystick R012 Pin 6 up to control unit N004 Pin 258 (SGND). 5. Check signal line from R012 Pin 2 up to control unit N004 Pin 114 (hand throttle signal 1). 6. Check signal line from R012 Pin 5 up to control unit N004 Pin 138 (hand throttle signal 2).
				3	Signal range exceeded or short circuit against positive supply voltage	R012: Hand gas potentiometer – Signal 1 – short circuit to plus or voltage high	Check the supply voltage for the hand gas joystick: 1. Check signal line from joystick R012 Pin 1 up to control unit N004 Pin 234 (5V Sensor +). 2. Check line from joystick R012 Pin 3 up to control unit N004 Pin 257 (SGND). 3. Check signal line from joystick R012 Pin 4 up to control unit N004 Pin 247 (5V Sensor +). 4. Check signal line from R012 Pin 2 up to control unit N004 Pin 114 (hand throttle signal 1).
				12	Control error (controller)	R012 Hand gas potentiometer – control error (controller)	1. Change ignition 2. Check software version and update if necessary. 3. Check the control unit connection, clean contacts 4. Read error memory with KADIAS, check whether additional error codes have been entered, save error memory. 5. Repeat ignition change.
				26	Signal outside the valid range	R012: Hand gas potentiometer – signal outside valid range	Check the supply voltage for the hand gas joystick: 1. Check signal line from joystick R012 Pin 1 up to control unit N004 Pin 234 (5V Sensor +). 2. Check line from joystick R012 Pin 3 up to control unit N004 Pin 257 (SGND). 3. Check signal line from joystick R012 Pin 4 up to control unit N004 Pin 247 (5V Sensor +). 4. Check signal line from R012 Pin 2 up to control unit N004 Pin 114 (hand throttle signal 1).
				27	Open circuit or short circuit to ground.	R012: Hand gas potentiometer – Signal 1 – open circuit or short circuit to ground.	
913	R013	Fill/empty shovel potentiometer (Joystick) error Signal 1/2	519913	2	Signal faulty or implausible	R013: Fill/empty shovel potentiometer – signal faulty or implausible	Check the supply voltage for the joystick: 1. Check the line from joystick D002 Pin 2 to XP03 Pin 7 via fuse F010 (3A) to clamp 30. 2. Check the line from joystick D002 Pin 3 to XP06 Pin 9 via fuse F032 (5A) to clamp 15. 3. Check the line from Joystick D002 Pin 1 to ground. 4. Exchange joystick.
				7	Missing response of mechanical system or incorrect setting	R013: Fill/empty shovel potentiometer – mechanics do not respond/jammed actuated	
				19	Faulty communication between components	R013: Fill/empty shovel potentiometer – faulty communication between components	
914	R014	Raise/lower potentiometer error (joystick)	519914	2	Signal faulty or implausible	R014: Raise/lower potentiometer – both signals – faulty or implausible	Check the supply voltage for the joystick: 1. Check the line from joystick D002 Pin 2 to XP03 Pin 7 via fuse F010 (3A) to clamp 30. 2. Check the line from joystick D002 Pin 3 to XP06 Pin 9 via fuse F032 (5A) to clamp 15. 3. Check the line from Joystick D002 Pin 1 to ground. 4. Exchange joystick.
				7	Missing response of mechanical system or incorrect setting	R014: Raise/lower potentiometer – mechanics do not respond/jammed actuated	
				19	Faulty communication between components	R014: Raise/lower potentiometer – faulty communication between components	

Code	KNC	Designation	SPN	FMI	Alarm text	Information text What kind of error has occurred?	Error diagnosis text
923	R023	Lifting arm angle sensor Signal 1 error	519923	2	Signal faulty or implausible	R023: Lifting arm angle sensor both signals – data faulty or not plausible	1. Check signal line of lifting arm angle sensor R023 Pin 1 up to control unit N004 Pin 247. 2. Check signal line of lifting arm angle sensor R023 Pin 2 up to control unit N004 Pin 105. 3. Check signal line of lifting arm angle sensor R023 Pin 8 up to control unit N004 Pin 217.
				3	Signal range exceeded or short circuit against positive supply voltage	R023: Lifting arm angle sensor – Signal 1 – short circuit to plus or high voltage	
				12	Control error (controller)	R023: Lifting arm angle sensor – both signals – control error (controller)	1. Ignition change. 2. Recalibrate angle sensor. 3. Check the connections and the cabling of the angle sensor 4. Check signal line of lifting arm angle sensor R023 Pin 1 and Pin 4 up to control unit N004 Pin 234. 5. Check the signal line of lifting arm angle sensor R023 Pin 5 up to control unit N004 Pin 129. 6. Check the signal line of lifting arm angle sensor R023 Pin 2 up to control unit N004 Pin 105. 7. Check the signal line of lifting arm angle sensor R023 Pin 7 up to control unit N004 Pin 230. 8. Check the signal line of lifting arm angle sensor R023 Pin 8 up to control unit N004 Pin 217. 9. Exchange angle sensor.
				13	Calibration faulty / not executed	R023: Lifting arm angle sensor – both signals – calibration faulty/not performed	1. Recalibrate sensor 2. Change ignition
				24	Logical error/software	R023: Lifting arm angle sensor both signals – logical error/software	1. Change ignition 2. Check software version and update if necessary. 3. Check signal line of lifting arm angle sensor R023 Pin 1 up to control unit N004 Pin 247. 4. Check signal line of lifting arm angle sensor R023 Pin 2 up to control unit N004 Pin 105. 5. Check signal line of lifting arm angle sensor R023 Pin 8 up to control unit N004 Pin 217. 6. Recalibrate lifting arm angle sensor 7. Repeat ignition change.
				26	Signal outside the valid range	R023: Lifting arm angle sensor – both signals – signal outside valid range	1. Check signal line of lifting arm angle sensor R023 Pin 1 up to control unit N004 Pin 247. 2. Check signal line of lifting arm angle sensor R023 Pin 2 up to control unit N004 Pin 105. 3. Check signal line of lifting arm angle sensor R023 Pin 8 up to control unit N004 Pin 217.
				27	Open circuit or short circuit to ground.	R023: Lifting arm angle sensor – Signal 1 – open wiring or short circuit to ground.	
939	R011	Accelerator pedal signal 2 error	519939	3	Signal range exceeded or short circuit against positive supply voltage	R011: Travel direction, pedal potentiometer - Signal 2 short circuit to positive / high voltage	1. Check the signal lines of gas pedal potentiometer R011 S2: Check from R011 Pin 6 to control unit N004 Pin 247 (5V Sensor +). Check from R011 Pin 4 up to control unit N004 Pin 256 (Sensor GND). Check from R011 Pin 5 up to control unit N004 Pin 134.
				27	Open circuit or short circuit to ground.	R011: Travel direction, pedal potentiometer - Signal 2 open wiring or short circuit to Ground	

Code	KNC	Designation	SPN	FMI	Alarm text	Information text What kind of error has occurred?	Error diagnosis text
940	R012	Hand gas potentiometer Signal 2 error	519940	3	Signal range exceeded or short circuit against positive supply voltage	R012: Hand gas potentiometer – Signal 2 – short circuit to plus or voltage high	Check the supply voltage for the hand gas joystick: 1. Check signal line from joystick R012 Pin 4 up to control unit N004 Pin 247 (5V Sensor +). 2. Check line from joystick R012 Pin 6 up to control unit N004 Pin 258 (SGND). 3. Check signal line from R012 Pin 5 up to control unit N004 Pin 138 (hand throttle signal 2).
				27	Open circuit or short circuit to ground.	R012: Hand gas potentiometer – Signal 2 – open circuit or short circuit to ground.	
948	R023	Lifting arm angle sensor Signal 2 error	519948	3	Signal range exceeded or short circuit against positive supply voltage	R023: Lifting arm angle sensor – Signal 2 – short circuit to plus or high voltage	1. Check signal line of lifting arm angle sensor R023 Pin 4 up to control unit N004 Pin 234. 2. Check signal line of lifting arm angle sensor R023 Pin 5 up to control unit N004 Pin 129. 3. Check signal line of lifting arm angle sensor R023 Pin 7 up to control unit N004 Pin 230.
				27	Open circuit or short circuit to ground.	R023: Lifting arm angle sensor – Signal 2 – open circuit or short circuit to ground.	
951		Error CAN reception main keypad	519951	9	Abnormal update rate	0xC8: Operating mode, Can bus keypad- time-out / abnormal clock rate	1. Ignition change. 2. Check the terminal resistance from CAN 1 on diagnostic connector X001 between Pin 4 (CAN 1 H) and Pin 3 (CAN 1 L). This should be 120 ohm.
952	S003	Keypad 1, Touch button 1, Third control circuit continuous function	519952	7	Missing response of mechanical system or incorrect setting	S033 – D003: Third control circuit, keypad touch button – mechanics do not respond/ jammed actuated	Check the supply voltage of keypad D003: 1. Check the signal line of keypad D003 Pin 1 via fuse F032 (5A) to clamp 15. 2. Check the signal line keypad D003 Pin 2 to ground. 3. Replace keypad.
953	S125	Keypad 1, Touch button 2, vertically lower shovel mode	519953	7	Missing response of mechanical system or incorrect setting	S125: Lowering mode, keypad touch button – mechanics do not respond/jammed actuated	Check the supply voltage of keypad D003: 1. Check the signal line of keypad D003 Pin 1 via fuse F032 (5A) to clamp 15. 2. Check the signal line keypad D003 Pin 2 to ground. 3. Replace keypad.
954	S017	Keypad 1, Touch button 3, front work light	519954	7	Missing response of mechanical system or incorrect setting	S017: Work light, keypad touch button – mechanics do not respond/jammed actuated	Check the supply voltage of keypad D003: 1. Check the signal line of keypad D003 Pin 1 via fuse F032 (5A) to clamp 15. 2. Check the signal line keypad D003 Pin 2 to ground. 3. Replace keypad.
955	S125	Keypad 1, Touch button 4, stacking mode	519955	7	Missing response of mechanical system or incorrect setting	S125: Lowering mode, keypad touch button – mechanics do not respond/jammed actuated	Check the supply voltage of keypad D003: 1. Check the signal line of keypad D003 Pin 1 via fuse F032 (5A) to clamp 15. 2. Check the signal line keypad D003 Pin 2 to ground. 3. Replace keypad.
956	S016	Keypad 1, Touch button 5, rear work light	519956	7	Missing response of mechanical system or incorrect setting	S016: Work light, keypad touch button – mechanics do not respond/jammed actuated	Check the supply voltage of keypad D003: 1. Check the signal line of keypad D003 Pin 1 via fuse F032 (5A) to clamp 15. 2. Check the signal line keypad D003 Pin 2 to ground. 3. Replace keypad.
957	S125	Keypad 1, Touch button 6, manual mode	519957	7	Missing response of mechanical system or incorrect setting	S125: Lowering mode, keypad touch button – mechanics do not respond/jammed actuated	Check the supply voltage of keypad D003: 1. Check the signal line of keypad D003 Pin 1 via fuse F032 (5A) to clamp 15. 2. Check the signal line keypad D003 Pin 2 to ground. 3. Replace keypad.
958	S060	Keypad 1, Touch button 7, telescope work light	519958	7	Missing response of mechanical system or incorrect setting	S060: Telescope work light, keypad telescope – mechanics do not respond/jammed actuated	Check the supply voltage of keypad D003: 1. Check the signal line of keypad D003 Pin 1 via fuse F032 (5A) to clamp 15. 2. Check the signal line keypad D003 Pin 2 to ground. 3. Replace keypad.

Code	KNC	Designation	SPN	FMI	Alarm text	Information text What kind of error has occurred?	Error diagnosis text
959	S085	Keypad 1, Touch button 8, lock for long-haul travel	519959	7	Missing response of mechanical system or incorrect setting	S085: Lock for long-haul travel, keypad touch button – mechanics do not respond/jammed actuated	Check the supply voltage of keypad D003: 1. Check the signal line of keypad D003 Pin 1 via fuse F032 (5A) to clamp 15. 2. Check the signal line keypad D003 Pin 2 to ground. 3. Replace keypad.
001		CAN Reception Keypad 2 optional error	520001	9	Abnormal update rate	0xC9: Operating mode, Can bus keypad- time-out / abnormal clock rate	1. Ignition change. 2. Check the terminal resistance from CAN 1 on diagnostic connector X001 between Pin 4 (CAN 1 H) and Pin 3 (CAN 1 L). This should be 120 ohm.
002	S047	Keypad 2, Touch button 1, tipping cylinder lock	520002	7	Missing response of mechanical system or incorrect setting	S047: Tipping cylinder lock, keypad touch button – mechanics do not respond/jammed actuated	Check the supply voltage of keypad D004: 1. Check the signal line of keypad D004 Pin 1 via fuse F032 (5A) to clamp 15. 2. Check the signal line keypad D004 Pin 2 to ground. 3. Replace keypad.
003	S044	Keypad 2, Touch button 2, load stabiliser	520003	7	Missing response of mechanical system or incorrect setting	S044: Load stabiliser, keypad touch button – mechanics do not respond/jammed actuated	Check the supply voltage of keypad D004: 1. Check the signal line of keypad D004 Pin 1 via fuse F032 (5A) to clamp 15. 2. Check the signal line keypad D004 Pin 2 to ground. 3. Replace keypad.
004	S064	Keypad 2, Touch button 3, reversing fan	520004	7	Missing response of mechanical system or incorrect setting	S064: Reversing fan, keypad touch button – mechanics do not respond/jammed actuated	Check the supply voltage of keypad D004: 1. Check the signal line of keypad D004 Pin 1 via fuse F032 (5A) to clamp 15. 2. Check the signal line keypad D004 Pin 2 to ground. 3. Replace keypad.
005	S018	Keypad 2, Touch button 4, rotating beacon	520005	7	Missing response of mechanical system or incorrect setting	S018: Rotating beacon, keypad touch button – mechanics do not respond/jammed actuated	Check the supply voltage of keypad D004: 1. Check the signal line of keypad D004 Pin 1 via fuse F032 (5A) to clamp 15. 2. Check the signal line keypad D004 Pin 2 to ground. 3. Replace keypad.
006	S180	Keypad 2, Touch button 5, continuous operation front socket Signal 2 or not assigned	520006	7	Missing response of mechanical system or incorrect setting	S180 (assignment of the keypad depends on selected options): front socket, keypad touch button – mechanics do not respond/jammed actuated	Check the supply voltage of keypad D004: 1. Check the signal line of keypad D004 Pin 1 via fuse F032 (5A) to clamp 15. 2. Check the signal line keypad D004 Pin 2 to ground. 3. Replace keypad.
007	S179 S027	Keypad 2, Touch button 6, continuous operation front socket Signal 1 or 14-pole front socket circuit selection (from, 1, 2, 3)	520007	7	Missing response of mechanical system or incorrect setting	S179/S027 (assignment of the keypad depends on selected options): front socket, keypad touch button – mechanics do not respond/ jammed actuated	Check the supply voltage of keypad D004: 1. Check the signal line of keypad D003 Pin 1 via fuse F032 (5A) to clamp 15. 2. Check the signal line keypad D003 Pin 2 to ground. 3. Replace keypad.
008	S182	Keypad 2, Touch button 7, tipping operation front socket Signal 2 or not assigned	520008	7	Missing response of mechanical system or incorrect setting	S182 (assignment of the keypad depends on selected options): front socket, keypad touch button – mechanics do not respond/jammed actuated	Check the supply voltage of keypad D004: 1. Check the signal line of keypad D004 Pin 1 via fuse F032 (5A) to clamp 15. 2. Check the signal line keypad D004 Pin 2 to ground. 3. Replace keypad.
009	S181	Keypad 2, Touch button 8, tipping operation front socket Signal 1 or not assigned	520009	7	Missing response of mechanical system or incorrect setting	S181 (assignment of the keypad depends on selected options): front socket, keypad touch button – mechanics do not respond/jammed actuated	Check the supply voltage of keypad D004: 1. Check the signal line of keypad D004 Pin 1 via fuse F032 (5A) to clamp 15. 2. Check the signal line keypad D004 Pin 2 to ground. 3. Replace keypad.
051		CAN Reception Keypad 2 optional error	520051	9	Abnormal update rate	0xCA: Operating mode, Can-Bus keypad- time-out/abnormal clock rate	1. Ignition change. 2. Check the terminal resistance from CAN 1 on diagnostic connector X001 between Pin 4 (CAN 1 H) and Pin 3 (CAN 1 L). This should be 120 ohm.

Code	KNC	Designation	SPN	FMI	Alarm text	Information text What kind of error has occurred?	Error diagnosis text
052	S070	Keypad 3, Touch button 1, lower tipper	520052	7	Missing response of mechanical system or incorrect setting	S070: Tipper, keypad touch button – mechanics do not respond/jammed actuated	Check the supply voltage of keypad D005: 1. Check the signal line of keypad D005 Pin 1 via fuse F032 (5A) to clamp 15. 2. Check the signal line keypad D005 Pin 2 to ground. 3. Replace keypad.
053	S070	Keypad 3, Touch button 2, raise tipper	520053	7	Missing response of mechanical system or incorrect setting	'S070: Tipper, keypad touch button – mechanics do not respond/jammed actuated	Check the supply voltage of keypad D005: 1. Check the signal line of keypad D005 Pin 1 via fuse F032 (5A) to clamp 15. 2. Check the signal line keypad D005 Pin 2 to ground. 3. Replace keypad.
054	S069	Keypad 3, Touch button 3, additional control circuit rear II	520054	7	Missing response of mechanical system or incorrect setting	S069: Rear additional control circuit, keypad touch button – mechanics do not respond/ jammed actuated	Check the supply voltage of keypad D005: 1. Check the signal line of keypad D005 Pin 1 via fuse F032 (5A) to clamp 15. 2. Check the signal line keypad D005 Pin 2 to ground. 3. Replace keypad.
055	S069	Keypad 3, Touch button 4, additional control circuit rear I	520055	7	Missing response of mechanical system or incorrect setting	S069: Rear additional control circuit, keypad touch button – mechanics do not respond/ jammed actuated	Check the supply voltage of keypad D005: 1. Check the signal line of keypad D005 Pin 1 via fuse F032 (5A) to clamp 15. 2. Check the signal line keypad D005 Pin 2 to ground. 3. Replace keypad.
056	S131 S183	Keypad 3, Touch button 5, lower auto hitch or rear lifting mechanism floating position	520056	7	Missing response of mechanical system or incorrect setting	S131/S183 Triangle/auto hitch, keypad touch button: – mechanics do not respond/jammed actuated	Check the supply voltage of keypad D005: 1. Check the signal line of keypad D005 Pin 1 via fuse F032 (5A) to clamp 15. 2. Check the signal line keypad D005 Pin 2 to ground. 3. Replace keypad.
057	S131 S184	Keypad 3, Touch button 6, raise auto hitch or Unlock rear lifting mechanism and PTO	520057	7	Missing response of mechanical system or incorrect setting	S131/S184: Triangle/auto hitch, keypad touch button – mechanics do not respond/jammed actuated	Check the supply voltage of keypad D005: 1. Check the signal line of keypad D005 Pin 1 via fuse F032 (5A) to clamp 15. 2. Check the signal line keypad D005 Pin 2 to ground. 3. Replace keypad.
058		Keypad 3, Touch button 7, not assigned	520058	7	Missing response of mechanical system or incorrect setting	Keypad touch button – mechanics do not respond/jammed actuated	Check the supply voltage of keypad D005: 1. Check the signal line of keypad D005 Pin 1 via fuse F032 (5A) to clamp 15. 2. Check the signal line keypad D005 Pin 2 to ground. 3. Replace keypad.
059	S143	Keypad 3, touch button 8, PTO ON/OFF	520059	7	Missing response of mechanical system or incorrect setting	S143: PTO, keypad touch button – mechanics do not respond/jammed actuated	Check the supply voltage of keypad D005: 1. Check the signal line of keypad D005 Pin 1 via fuse F032 (5A) to clamp 15. 2. Check the signal line keypad D005 Pin 2 to ground. 3. Replace keypad.
995		Configuration error / Error in drive function application software	521995	24	Logical error/software	ASW: travel direction, control software, SW function – logical error/software	1. Change ignition 2. Check the control unit connector, clean contacts, check pins for discoloration 3. Read error memory with KADIAS, check whether additional error codes have been entered, save error memory. 4. Repeat ignition change.
195		Configuration error / error in application software of telescopic boom	522195	24	Logical error/software	Application software: Telescopic boom, control software, software function - logical error (software error)	1. Change ignition 2. Check the control unit connector, clean contacts, check pins for discoloration 3. Read error memory with KADIAS, check whether additional error codes have been entered, save error memory. 4. Repeat ignition change.

Code	KNC	Designation	SPN	FMI	Alarm text	Information text What kind of error has occurred?	Error diagnosis text
282		Configuration error / error in application software of 3rd control circuit	522282	24	Logical error/software	ASW: III. Control circuit / quickhitch facility, control software, software function - logical error (software error)	1. Change ignition 2. Check the control unit connector, clean contacts, check pins for discoloura-tion 3. Read error memory with KADIAS, check whether additional error codes have been entered, save error memory. 4. Repeat ignition change.

22.4 Error code drive electronics N001

Code	KCN	Designation	SPN	FMI	Alarm text	Information text What kind of error has occurred?	Error diagnosis text
400	N001	Traction electronics	516400	12	Control error (controller)	Voltage level at control unit N001, connector XE18, PIN 2 is outside the permissible range	1. Check the power supply at control unit N001 connector XE18 PIN 2. Rated voltage = 12V 2. Check charging voltage of generator Rated value voltage = approx. 14 V 3. Check battery voltage Rated voltage with engine off = approx. 12 V
401	N001	Traction electronics	516401	12	Control error (controller)	Sensor voltage at control unit N001, connector XE18, PIN 3 is above the permissible range	1. Check the power supply at control unit N001 connector XE18 PIN 2. Rated voltage = 12V 2. Check charging voltage of generator Rated value voltage = approx. 14 V 3. Check battery voltage Rated voltage with engine off = approx. 12 V
403	N001 S034 S035 S066	Forward-reverse control	516403	12	Control error (controller)	Voltage level at signal input, control unit N001, connector CC1, PIN 6 and PIN 7 and PIN 12 is outside the permissible range.	1. Check signal line between switch S034/S035/S066 connector XS01 PIN 2, PIN 1, PIN 5 and control unit N001 connector CC1 PIN 6, PIN 7 and PIN 12. 2. FNR Forwards switch actuated: Rated voltage at control unit N001 connector CC1 PIN 6 = 12V 3.FNR neutral switch actuated or handbrake applied: Rated voltage at control unit N001 connector CC1 PIN 12 = 12V 4. FNR Reverse switch actuated: Rated voltage at control unit N001 connector CC1 PIN 7 = 12V
404	N001 R002	Inching sensor	516404	12	Control error (controller)	Voltage level at signal input, control unit N001, connector CC2, PIN 1 and PIN 7 is outside the permissible range.	1. Short circuit or open circuit in one of the signal lines. 2. Check signal line between sensor R002, PIN 3, PIN 4 and control unit N001 connector CC2 PIN 1 and PIN 7. Rated voltage at connector CC2 PIN 1 = 4.5 V, PIN 22 = 0.5 V
405	N001 R003	Creep gear potentiometer	516405	12	Control error (controller)	Voltage level at signal input, control unit N001, connector CC1, PIN 10 and PIN 11 is outside the permissible range.	1. Short circuit or open circuit in one of the signal lines. 2. Check signal line between sensor R003, PIN 2, PIN 5 and control unit N001 connector CC1 PIN 10 and PIN 11. Rated voltage at connector CC1 PIN 10 = 4.5 V, PIN 11 = 0.5 V
406	N001 B010	Hydraulic pump speed sensor	516406	12	Control error (controller)	Voltage level at signal input, control unit N001, connector PPU2, PIN 2 is outside the permissible range.	1. Short circuit or open circuit in one of the signal lines. 2. Check signal line between sensor B010, PIN 3, control unit N001 connector PPU2 PIN 2.
407		Hydraulic pump swivel angle sensor	516407	12	Control error (controller)		
408	N001 S021	Speed range switch	516408	12	Control error (controller)	Voltage level at signal input, control unit N001, connector CC1, PIN 10 and PIN 11 is outside the permissible range.	1. Check signal line between switch S021 PIN 7 and control unit N001 connector CC2 PIN 2. Switch is activated: Rated voltage at control unit N001 connector CC2 PIN 2 = 12V Switch is not activated: Rated voltage at control unit N001 connector CC2 PIN 2 = 0V
409	N001 B009	Gearbox speed sensor	516409	12	Control error (controller)	Voltage level at signal input, control unit N001, connector CC1, PIN 5 and connector CC2 PIN 4 is outside the permissible range.	1. Short circuit or open circuit in one of the signal lines. 2. Check signal line between sensor B009, PIN 2, PIN 3 and control unit N001 connector CC1 PIN 5 and CC2 PIN 4.
410	N001 B009	Sensor for direction of rotation of gearbox	516410	12	Control error (controller)	Voltage level at signal input, control unit N001, connector CC1, PIN 5 and connector CC2 PIN 4 is outside the permissible range.	1. Short circuit or open circuit in one of the signal lines. 2. Check signal line between sensor B009, PIN 2, PIN 3 and control unit N001 connector CC1 PIN 5 and CC2 PIN 4.

Code	KCN	Designation	SPN	FMI	Alarm text	Information text What kind of error has occurred?	Error diagnosis text
411	N001 Y005	Forward travel solenoid valve	516411	12	Control error (controller)	Current intensity level at control unit N001, connector PCS, PIN 1 is outside the permissible range.	1. Short circuit or open circuit in one of the current-carrying or grounding lines. 2. Check current-carrying line between solenoid valve Y005, PIN 1 and control unit N001 connector PSC PIN 1. 3. Check grounding line between solenoid valve Y005, PIN 2 and control unit N001 connector PSC PIN 6.
412	N001 Y004	Reverse travel solenoid valve	516412	12	Control error (controller)	Current intensity level at control unit N001, connector PCS, PIN 2 is outside the permissible range.	1. Short circuit or open circuit in one of the current-carrying or grounding lines. 2. Check current-carrying line between solenoid valve Y004, PIN 1 and control unit N001 connector PSC PIN 2. 3. Check grounding line between solenoid valve Y004, PIN 2 and control unit N001 connector PSC PIN 5.
413	N001 Y002	Gearbox solenoid valve	516413	12	Control error (controller)	Current intensity level at control unit N001, connector CC2, PIN 3 is outside the permissible range.	1. Short circuit or open circuit in one of the current-carrying or grounding lines. 2. Check current-carrying line between solenoid valve Y002, PIN 2 and control unit N001 connector CC2 PIN 3. 3. Check grounding line to solenoid valve Y002, PIN 1.
414	N001 K055	Brake light relay	516414	12	Control error (controller)	Current intensity level at control unit N001, connector PCS, PIN 3 and PIN 4 is outside the permissible range.	1. Short circuit or open circuit of the current-carrying line. 2. Check current-carrying line between relay K055 and control unit N001 connector PSC PIN 3.
415	N001 Y043 Y066	Parking brake solenoid valve	516415	12	Control error (controller)	Current intensity level at control unit N001, connector CC2, PIN 9 and PIN 10 is outside the permissible range.	1. Short circuit or open circuit of the current-carrying line. 2. Check current-carrying line between solenoid valve Y043, Y066 and control unit N001 connector CC2 PIN 9 and PIN 10.
416	N001 Y002 Y010	Driving direction identification	516416	12	Control error (controller)	Current intensity level at control unit N001, connector CC2, PIN 8 is outside the permissible range.	1. Short circuit or open circuit in one of the current-carrying or grounding lines. 2. Check current-carrying line between solenoid valve Y010, PIN 2 and control unit N001 connector CC2 PIN 8. 3. Check grounding line to solenoid valve Y002, PIN 1.
417		ECU temperature H1-AC	516417	12	Control error (controller)	Internal control unit temperature of control unit N001 is outside the valid range	1. Check hydraulic oil temperature. 2. Check cooling system.
418	N001 R011	Accelerator pedal	516418	12	Control error (controller)	Voltage level at signal input, control unit N001, connector PPC, PIN 2 and PIN 5 is outside the permissible range.	1. Short circuit or open circuit in one of the signal lines. 2. Check signal line between accelerator pedal R011, PIN 2, PIN 5 and control unit N001 connector PPC PIN 2 and PIN 5. Rated voltage at connector PPC PIN 2 = 4.5 V, PIN 5 = 0.5 V.
419	N001 S022	Steering mode switch	516419	12	Control error (controller)	Voltage level at signal input, control unit N001, connector CC2, PIN 11 is outside the permissible range.	1. Short circuit or open circuit in one of the signal lines. 2. Check signal line between switch S022, PIN 1 and control unit N001 connector CC2 PIN 11. Switch is activated: Rated voltage at connector CC2 PIN 11 = 12 V Switch is not activated: Rated voltage at connector CC2 PIN 11 = 0 V
420		Start protection	516420	12	Control error (controller)	Internal control unit monitoring is active. An error has been detected.	1. Check other error entries.
421	N001 B010	Speed comparison of gearbox speed sensor between H1 and frame controller	516421	12	Control error (controller)	Voltage level at signal input, control unit N001, connector PPU2, PIN 2 is outside the permissible range.	1. Short circuit or open circuit in one of the signal lines. 2. Check signal line between sensor B010, PIN 3, control unit N001 connector PPU2 PIN 2.

22.5 Error code for diesel engine electronics N005

Code	Designation	SPN	FMI	Alarm text	Information text What kind of error has occurred?	Error diagnosis text
027	Exhaust gas recirculation error	27	7	Missing response of mechanical system or incorrect setting	-	1. Visual inspection of the engine wiring harness 2. Change ignition 3. Contact manufacturer
028	ASC accelerator pedal sensor	28	3	Signal range exceeded or short circuit against positive supply voltage	-	1. Visual inspection of the engine wiring harness 2. Change ignition 3. Contact manufacturer
			4	Under signal range or short circuit against machine ground / sensor ground	-	1. Visual inspection of the engine wiring harness 2. Change ignition 3. Contact manufacturer
			20	Signal value deviates upwards	-	1. Visual inspection of the engine wiring harness 2. Change ignition 3. Contact manufacturer
			21	Signal value deviates downwards	-	1. Visual inspection of the engine wiring harness 2. Change ignition 3. Contact manufacturer
029	Accelerator pedal sensor 2	29	3	Signal range exceeded or short circuit against positive supply voltage	-	1. Visual inspection of the engine wiring harness 2. Change ignition 3. Contact manufacturer
			4	Under signal range or short circuit against machine ground / sensor ground	-	1. Visual inspection of the engine wiring harness 2. Change ignition 3. Contact manufacturer
084	Vehicle speed sensor	84	2	Signal is faulty or irregular	-	1. Visual inspection of the engine wiring harness 2. Change ignition 3. Contact manufacturer
			5	Current too low or open wiring	-	1. Visual inspection of the engine wiring harness 2. Change ignition 3. Contact manufacturer
			8	Abnormal frequency, pulse width or period	-	1. Visual inspection of the engine wiring harness 2. Change ignition 3. Contact manufacturer
091	Accelerator pedal sensor 1	91	3	Signal range exceeded or short circuit against positive supply voltage	-	1. Visual inspection of the engine wiring harness 2. Change ignition 3. Contact manufacturer
091	Accelerator pedal sensor 2	91	4	Under signal range or short circuit against machine ground / sensor ground	-	1. Visual inspection of the engine wiring harness 2. Change ignition 3. Contact manufacturer
094	Fuel pressure sensor	94	3	Signal range exceeded or short circuit against positive supply voltage	-	1. Visual inspection of the engine wiring harness 2. Change ignition 3. Contact manufacturer
			6	Current too high or short circuit against machine ground	-	1. Visual inspection of the engine wiring harness 2. Change ignition 3. Contact manufacturer

Code	Designation	SPN	FMI	Alarm text	Information text What kind of error has occurred?	Error diagnosis text
096	Fuel level sensor	96	3	Signal range exceeded or short circuit against positive supply voltage	-	1. Visual inspection of the engine wiring harness 2. Change ignition 3. Contact manufacturer
			4	Under signal range or short circuit against machine ground / sensor ground	-	1. Visual inspection of the engine wiring harness 2. Change ignition 3. Contact manufacturer
097	Detection of water in fuel	97	2	Signal is faulty or irregular	-	1. Visual inspection of the engine wiring harness 2. Change ignition 3. Contact manufacturer
100	Oil pressure	100	1	Well below threshold	-	1. Visual inspection of the engine wiring harness 2. Change ignition 3. Contact manufacturer
102	Charge-air pressure sensor	102	2	Signal is faulty or irregular	-	1. Visual inspection of the engine wiring harness 2. Change ignition 3. Contact manufacturer
			3	Signal range exceeded or short circuit against positive supply voltage	-	1. Visual inspection of the engine wiring harness 2. Change ignition 3. Contact manufacturer
			4	Under signal range or short circuit against machine ground / sensor ground	-	1. Visual inspection of the engine wiring harness 2. Change ignition 3. Contact manufacturer
105	Air intake temperature	105	3	Signal range exceeded or short circuit against positive supply voltage	-	1. Visual inspection of the engine wiring harness 2. Change ignition 3. Contact manufacturer
			4	Under signal range or short circuit against machine ground / sensor ground	-	1. Visual inspection of the engine wiring harness 2. Change ignition 3. Contact manufacturer
107	Pressure-difference sensor	107	2	Signal is faulty or irregular	-	1. Visual inspection of the engine wiring harness 2. Change ignition 3. Contact manufacturer
			3	Signal range exceeded or short circuit against positive supply voltage	-	1. Visual inspection of the engine wiring harness 2. Change ignition 3. Contact manufacturer
			4	Under signal range or short circuit against machine ground / sensor ground	-	1. Visual inspection of the engine wiring harness 2. Change ignition 3. Contact manufacturer
108	Atmospheric pressure	108	3	Signal range exceeded or short circuit against positive supply voltage	-	1. Visual inspection of the engine wiring harness 2. Change ignition 3. Contact manufacturer
			4	Under signal range or short circuit against machine ground / sensor ground	-	1. Visual inspection of the engine wiring harness 2. Change ignition 3. Contact manufacturer

Code	Designation	SPN	FMI	Alarm text	Information text What kind of error has occurred?	Error diagnosis text
110	Coolant temperature sensor	110	0	Threshold widely exceeded	-	1. Check the cable and plug connection, and the connector of the coolant temperature sensor. 2. Visual inspection of the engine wiring harness 3. Change ignition 4. Contact manufacturer
			2	Signal is faulty or irregular	-	1. Check the cable and plug connection, and the connector of the coolant temperature sensor. 2. Visual inspection of the engine wiring harness 3. Change ignition 4. Contact manufacturer
			3	Signal range exceeded or short circuit against positive supply voltage	-	1. Check the cable and plug connection, and the connector of the coolant temperature sensor. 2. Visual inspection of the engine wiring harness 3. Change ignition 4. Contact manufacturer
			4	Under signal range or short circuit against machine ground / sensor ground	-	1. Check the cable and plug connection, and the connector of the coolant temperature sensor. 2. Visual inspection of the engine wiring harness 3. Change ignition 4. Contact manufacturer
156	Rail pressure error	156	2	Signal is faulty or irregular	-	Contact manufacturer
			14	Special error	-	Contact manufacturer
167	Fuel injector	167	1	Well below threshold	Injection valve - overcharging	Contact manufacturer
			31	Fault condition fulfilled	Injection valve - insufficient charging	Contact manufacturer
168	Board voltage of vehicle	168	3	Signal range exceeded or short circuit against positive supply voltage	-	1. Check the battery voltage, the battery connection, and whether the correct batter has been installed. 2. Visual inspection of the engine wiring harness 3. Change ignition 4. Contact manufacturer
			4	Under signal range or short circuit against machine ground / sensor ground	-	1. Check the battery voltage, the battery connection, and whether the correct batter has been installed. 2. Visual inspection of the engine wiring harness 3. Change ignition 4. Contact manufacturer

Code	Designation	SPN	FMI	Alarm text	Information text What kind of error has occurred?	Error diagnosis text
174	Engine fuel temperature sensor	174	0	Threshold widely exceeded	-	1. Visual inspection of the engine wiring harness 2. Change ignition 3. Contact manufacturer
			1	Well below threshold	-	1. Visual inspection of the engine wiring harness 2. Change ignition 3. Contact manufacturer
			2	Signal is faulty or irregular	-	1. Visual inspection of the engine wiring harness 2. Change ignition 3. Contact manufacturer
			3	Signal range exceeded or short circuit against positive supply voltage	-	1. Visual inspection of the engine wiring harness 2. Change ignition 3. Contact manufacturer
			4	Under signal range or short circuit against machine ground / sensor ground	-	1. Visual inspection of the engine wiring harness 2. Change ignition 3. Contact manufacturer
			9	Abnormal update rate	-	1. Visual inspection of the engine wiring harness 2. Change ignition 3. Contact manufacturer
			14	Special error	-	1. Visual inspection of the engine wiring harness 2. Change ignition 3. Contact manufacturer
			15	Threshold slightly exceeded	-	1. Visual inspection of the engine wiring harness 2. Change ignition 3. Contact manufacturer
			16	Threshold passed	-	1. Visual inspection of the engine wiring harness 2. Change ignition 3. Contact manufacturer
			20	Signal value deviates upwards	-	1. Visual inspection of the engine wiring harness 2. Change ignition 3. Contact manufacturer
			31	Fault condition fulfilled	-	1. Visual inspection of the engine wiring harness 2. Change ignition 3. Contact manufacturer
190	Engine speed	190	0	Threshold widely exceeded	-	Contact manufacturer
			2	Signal is faulty or irregular	-	Contact manufacturer
			9	Abnormal update rate	-	Contact manufacturer
430	Start relay	430	3	Signal range exceeded or short circuit against positive supply voltage	-	1. Visual inspection of the engine wiring harness 2. Change ignition 3. Contact manufacturer
			4	Under signal range or short circuit against machine ground / sensor ground	-	1. Visual inspection of the engine wiring harness 2. Change ignition 3. Contact manufacturer
			5	Current too low or open wiring	-	1. Visual inspection of the engine wiring harness 2. Change ignition 3. Contact manufacturer

Code	Designation	SPN	FMI	Alarm text	Information text What kind of error has occurred?	Error diagnosis text
598	Clutch Switch	598	2	Signal is faulty or irregular	-	1. Visual inspection of the engine wiring harness 2. Change ignition 3. Contact manufacturer
604	Gearbox neutral switch	604	2	Signal is faulty or irregular	-	1. Visual inspection of the engine wiring harness 2. Change ignition 3. Contact manufacturer
626	Preheating relay	626	3	Signal range exceeded or short circuit against positive supply voltage	-	1. Visual inspection of the engine wiring harness 2. Change ignition 3. Contact manufacturer
			4	Under signal range or short circuit against machine ground / sensor ground	-	1. Visual inspection of the engine wiring harness 2. Change ignition 3. Contact manufacturer
637	Camshaft position	637	2	Signal is faulty or irregular	-	Contact manufacturer
			8	Abnormal frequency, pulse width or period	-	Contact manufacturer
083	CAN 1	1083	19	Faulty communication between components	-	Contact manufacturer
			31	Fault condition fulfilled	-	Contact manufacturer
084	CAN 2	1084	19	Faulty communication between components	-	Contact manufacturer
127	Turbo loader boost pressure	1127	0	Threshold widely exceeded	-	1. Visual inspection of the engine wiring harness 2. Change ignition 3. Contact manufacturer
			1	Well below threshold	-	1. Visual inspection of the engine wiring harness 2. Change ignition 3. Contact manufacturer
349	Pumps incompletely readjust	1349	2	Signal is faulty or irregular	-	Contact manufacturer
382	Pressure error of fuel filter	1382	0	Threshold widely exceeded	-	1. Visual inspection of the engine wiring harness 2. Change ignition 3. Contact manufacturer
			16	Threshold passed	-	1. Visual inspection of the engine wiring harness 2. Change ignition 3. Contact manufacturer
393	Fuel injector 1	1393	2	Signal is faulty or irregular	-	Contact manufacturer
			5	Current too low or open wiring	-	Contact manufacturer
394	Fuel injector 3	1394	2	Signal is faulty or irregular	-	Contact manufacturer
			5	Current too low or open wiring	-	Contact manufacturer
395	Fuel injector 4	1395	2	Signal is faulty or irregular		Contact manufacturer
			5	Current too low or open wiring		Contact manufacturer
396	Fuel injector 2	1396	2	Signal is faulty or irregular	-	Contact manufacturer
			5	Current too low or open wiring	-	Contact manufacturer

Code	Designation	SPN	FMI	Alarm text	Information text What kind of error has occurred?	Error diagnosis text
397	Fuel injector	1397	3	Signal range exceeded or short circuit against positive supply voltage	Injection valve 1 or injection valve 3	Contact manufacturer
			4	Under signal range or short circuit against machine ground / sensor ground	Injection valve 1 or injection valve 3	Contact manufacturer
			5	Current too low or open wiring	Injection valve 1 and injection valve 4	Contact manufacturer
639	Fan speed	1639	3	Signal range exceeded or short circuit against positive supply voltage	-	1. Visual inspection of the engine wiring harness 2. Change ignition 3. Contact manufacturer
			4	Under signal range or short circuit against machine ground / sensor ground	-	1. Visual inspection of the engine wiring harness 2. Change ignition 3. Contact manufacturer
			5	Current too low or open wiring	-	1. Visual inspection of the engine wiring harness 2. Change ignition 3. Contact manufacturer
			6	Current too high or short circuit against machine ground	-	1. Visual inspection of the engine wiring harness 2. Change ignition 3. Contact manufacturer
			31	Fault condition fulfilled	-	1. Visual inspection of the engine wiring harness 2. Change ignition 3. Contact manufacturer
762	Hydraulic pressure sensor	1762	3	Signal range exceeded or short circuit against positive supply voltage	-	1. Visual inspection of the engine wiring harness 2. Change ignition 3. Contact manufacturer
			4	Under signal range or short circuit against machine ground / sensor ground	-	1. Visual inspection of the engine wiring harness 2. Change ignition 3. Contact manufacturer
791	Exhaust gas recirculation valve 1	2791	2	Signal is faulty or irregular	-	1. Visual inspection of the engine wiring harness 2. Change ignition 3. Contact manufacturer
791	Exhaust gas recirculation valve 2	2791	3	Signal range exceeded or short circuit against positive supply voltage	-	1. Visual inspection of the engine wiring harness 2. Change ignition 3. Contact manufacturer
791	Exhaust gas recirculation valve 3	2791	4	Under signal range or short circuit against machine ground / sensor ground	-	1. Visual inspection of the engine wiring harness 2. Change ignition 3. Contact manufacturer
791	Exhaust gas recirculation valve 4	2791	7	Missing response of mechanical system or incorrect setting	-	1. Visual inspection of the engine wiring harness 2. Change ignition 3. Contact manufacturer

Code	Designation	SPN	FMI	Alarm text	Information text What kind of error has occurred?	Error diagnosis text
791	Exhaust gas recirculation valve 5	2791	13	Calibration faulty / not executed	-	1. Visual inspection of the engine wiring harness 2. Change ignition 3. Contact manufacturer
791	Exhaust gas recirculation valve 6	2791	14	Special error	-	1. Visual inspection of the engine wiring harness 2. Change ignition 3. Contact manufacturer
791	Exhaust gas recirculation valve 7	2791	31	Fault condition fulfilled	-	1. Visual inspection of the engine wiring harness 2. Change ignition 3. Contact manufacturer
802	Data storage errors	2802	9	Abnormal update rate	-	Contact manufacturer
			11	Error description cannot be identified	-	Contact manufacturer
			12	Control error (controller)	-	Contact manufacturer
			13	Calibration faulty / not executed	-	Contact manufacturer
			14	Special error	-	Contact manufacturer
			31	Fault condition fulfilled	-	Contact manufacturer
349	TSC1 error	3349	2	Signal is faulty or irregular	-	Contact manufacturer
			9	Abnormal update rate	-	Contact manufacturer
			10	Abnormal signal modification rate	-	Contact manufacturer
509	Supply voltage sensor 1	3509	3	Signal range exceeded or short circuit against positive supply voltage	-	1. Visual inspection of the engine wiring harness 2. Contact manufacturer
			4	Under signal range or short circuit against machine ground / sensor ground	-	1. Visual inspection of the engine wiring harness 2. Contact manufacturer
510	Supply voltage sensor 2	3510	3	Signal range exceeded or short circuit against positive supply voltage	-	1. Visual inspection of the engine wiring harness 2. Contact manufacturer
			4	Under signal range or short circuit against machine ground / sensor ground	-	1. Visual inspection of the engine wiring harness 2. Contact manufacturer
082	Fuel pump relay error	4082	3	Signal range exceeded or short circuit against positive supply voltage	-	1. Visual inspection of the engine wiring harness 2. Change ignition 3. Contact manufacturer
			4	Under signal range or short circuit against machine ground / sensor ground	-	1. Visual inspection of the engine wiring harness 2. Change ignition 3. Contact manufacturer

22.6 Error code of 14-pole front socket electronics

Code	Designation	SPN	FMI	Alarm text	Information text What kind of error has occurred?	Error diagnosis text
900	Control unit error	517900	12	Control error (controller)	Control unit error	1. Change ignition 2. Check plug connection on the control unit, check pints for discolouration.
901	Control unit error	517901	12	Control error (controller)	Control unit error	1. Change ignition 2. Check plug connection on the control unit, check pints for discolouration.
902	Control unit error	517902	2	Signal faulty or implausible	Control unit - HAST or PTC error	1. Change ignition 2. Check plug connection on the control unit, check pints for discolouration.
906	Control unit error	517906	16	Threshold passed	Control - Sensor Signal 1 very high	1. Change ignition 2. Check plug connection on the control unit, check pints for discolouration.
			18	Below threshold	Control - Sensor Signal 1 very low	1. Change ignition 2. Check plug connection on the control unit, check pints for discolouration.
907	Control unit error	517907	19	Faulty communication between components	Control unit - Reception data with set error status	1. Change ignition 2. Check the terminal resistance from CAN 0 on diagnostic connector X001 between Pin 2 (CAN 0 H) and Pin 1 (CAN 0 L). This should be 120 ohm. 3. Check the plug connection on the control unit as well as the pins for discolouration.
			22	No signal, components not available	Control unit - no signal, CAN Bus off	1. Change ignition 2. Check the terminal resistance from CAN 0 on diagnostic connector X001 between Pin 2 (CAN 0 H) and Pin 1 (CAN 0 L). This should be 120 ohm. 3. Check the plug connection on the control unit as well as the pins for discolouration.
912	Control unit error	517912	12	Control error (controller)	Control unit - RAM error, DB RAM loading error	1. Change ignition 2. Check plug connection on the control unit, check pints for discolouration.
			12	Control error (controller)	Control unit - memory error, DB Nv loading error	1. Change ignition 2. Check plug connection on the control unit, check pints for discolouration.
			12	Control error (controller)	Control unit - loading error, DB Nv memory error	1. Change ignition 2. Check plug connection on the control unit, check pints for discolouration.
914	Control unit error	517914	12	Control error (controller)	Control unit - RAM error, DB RAM loading error	1. Change ignition 2. Check plug connection on the control unit, check pints for discolouration.
			12	Control error (controller)	Control unit - memory error, DB Nv loading error	1. Change ignition 2. Check plug connection on the control unit, check pints for discolouration.
			12	Control error (controller)	Control unit - loading error, DB Nv memory error	1. Change ignition 2. Check plug connection on the control unit, check pints for discolouration.
915	Control unit error	517915	12	Control error (controller)	Control unit - RAM error, DB RAM loading error	1. Change ignition 2. Check plug connection on the control unit, check pints for discolouration.
			12	Control error (controller)	Control unit - memory error, DB Nv loading error	1. Change ignition 2. Check plug connection on the control unit, check pints for discolouration.
			12	Control error (controller)	Control unit - loading error, DB Nv memory error	1. Change ignition 2. Check plug connection on the control unit, check pints for discolouration.

Code	Designation	SPN	FMI	Alarm text	Information text What kind of error has occurred?	Error diagnosis text
919	CAN communication	517919	0	Threshold widely exceeded	CAN communication - HW buffer signal too high	1. Change ignition 2. Check the terminal resistance from CAN 0 on diagnostic connector X001 between Pin 2 (CAN 0 H) and Pin 1 (CAN 0 L). This should be 120 ohm. 3. Check the plug connection on the control unit as well as the pins for discolouration.
			1	Well below threshold	CAN communication - HW buffer signal too low	1. Change ignition 2. Check the terminal resistance from CAN 0 on diagnostic connector X001 between Pin 2 (CAN 0 H) and Pin 1 (CAN 0 L). This should be 120 ohm. 3. Check the plug connection on the control unit as well as the pins for discolouration.
			2	Signal faulty or implausible	CAN communication - HW buffer data implausible	1. Change ignition 2. Check the terminal resistance from CAN 0 on diagnostic connector X001 between Pin 2 (CAN 0 H) and Pin 1 (CAN 0 L). This should be 120 ohm. 3. Check the plug connection on the control unit as well as the pins for discolouration.
			3	Signal range exceeded or short circuit against positive supply voltage	CAN communication - HW buffer short circuit to plus	1. Change ignition 2. Check the terminal resistance from CAN 0 on diagnostic connector X001 between Pin 2 (CAN 0 H) and Pin 1 (CAN 0 L). This should be 120 ohm. 3. Check the plug connection on the control unit as well as the pins for discolouration.
079	CAN communication	518079	8	Abnormal frequency, pulse width or period	CAN communication - abnormal frequency - faulty pulse width or period	1. Change ignition 2. Check the terminal resistance from CAN 0 on diagnostic connector X001 between Pin 2 (CAN 0 H) and Pin 1 (CAN 0 L). This should be 120 ohm. 3. Check the plug connection on the control unit as well as the pins for discolouration.
			9	Abnormal update rate	CAN communication - time out error	1. Change ignition 2. Check the terminal resistance from CAN 0 on diagnostic connector X001 between Pin 2 (CAN 0 H) and Pin 1 (CAN 0 L). This should be 120 ohm. 3. Check the plug connection on the control unit as well as the pins for discolouration.
			10	Abnormal signal modification rate	CAN communication - abnormal rate of change - counter error	1. Change ignition 2. Check the terminal resistance from CAN 0 on diagnostic connector X001 between Pin 2 (CAN 0 H) and Pin 1 (CAN 0 L). This should be 120 ohm. 3. Check the plug connection on the control unit as well as the pins for discolouration.
			19	Faulty communication between components	CAN communication - received data with error status, message memory overflow	1. Change ignition 2. Check the terminal resistance from CAN 0 on diagnostic connector X001 between Pin 2 (CAN 0 H) and Pin 1 (CAN 0 L). This should be 120 ohm. 3. Check the plug connection on the control unit as well as the pins for discolouration.
			24	Logical error/software	CAN communication - logical SW error - faulty message	1. Change ignition 2. Check the terminal resistance from CAN 0 on diagnostic connector X001 between Pin 2 (CAN 0 H) and Pin 1 (CAN 0 L). This should be 120 ohm. 3. Check the plug connection on the control unit as well as the pins for discolouration.

Code	Designation	SPN	FMI	Alarm text	Information text What kind of error has occurred?	Error diagnosis text
080	CAN communication	518080	8	Abnormal frequency, pulse width or period	CAN communication - abnormal frequency - faulty pulse width or period	1. Change ignition 2. Check the terminal resistance from CAN 0 on diagnostic connector X001 between Pin 2 (CAN 0 H) and Pin 1 (CAN 0 L). This should be 120 ohm. 3. Check the plug connection on the control unit as well as the pins for discolouration.
			9	Abnormal update rate	CAN communication - abnormal update rate - time out of cyclical messages	1. Change ignition 2. Check the terminal resistance from CAN 0 on diagnostic connector X001 between Pin 2 (CAN 0 H) and Pin 1 (CAN 0 L). This should be 120 ohm. 3. Check the plug connection on the control unit as well as the pins for discolouration.
			10	Abnormal signal modification rate	CAN communication - abnormal rate of change - counter error	1. Change ignition 2. Check the terminal resistance from CAN 0 on diagnostic connector X001 between Pin 2 (CAN 0 H) and Pin 1 (CAN 0 L). This should be 120 ohm. 3. Check the plug connection on the control unit as well as the pins for discolouration.
			19	Faulty communication between components	CAN communication - received data with error status, message memory overflow	1. Change ignition 2. Check the terminal resistance from CAN 0 on diagnostic connector X001 between Pin 2 (CAN 0 H) and Pin 1 (CAN 0 L). This should be 120 ohm. 3. Check the plug connection on the control unit as well as the pins for discolouration.
			24	Logical error/software	CAN communication - logical SW error - faulty message	1. Change ignition 2. Check the terminal resistance from CAN 0 on diagnostic connector X001 between Pin 2 (CAN 0 H) and Pin 1 (CAN 0 L). This should be 120 ohm. 3. Check the plug connection on the control unit as well as the pins for discolouration.

Code	Designation	SPN	FMI	Alarm text	Information text What kind of error has occurred?	Error diagnosis text
081	CAN communication	518081	8	Abnormal frequency, pulse width or period	CAN communication - abnormal frequency - faulty pulse width or period	1. Change ignition 2. Check the terminal resistance from CAN 0 on diagnostic connector X001 between Pin 2 (CAN 0 H) and Pin 1 (CAN 0 L). This should be 120 ohm. 3. Check the plug connection on the control unit as well as the pins for discolouration.
			9	Abnormal update rate	CAN communication - abnormal update rate - time out of cyclical messages	1. Change ignition 2. Check the terminal resistance from CAN 0 on diagnostic connector X001 between Pin 2 (CAN 0 H) and Pin 1 (CAN 0 L). This should be 120 ohm. 3. Check the plug connection on the control unit as well as the pins for discolouration.
			10	Abnormal signal modification rate	CAN communication - abnormal rate of change - counter error	1. Change ignition 2. Check the terminal resistance from CAN 0 on diagnostic connector X001 between Pin 2 (CAN 0 H) and Pin 1 (CAN 0 L). This should be 120 ohm. 3. Check the plug connection on the control unit as well as the pins for discolouration.
			19	Faulty communication between components	CAN communication - received data with error status, message memory overflow	1. Change ignition 2. Check the terminal resistance from CAN 0 on diagnostic connector X001 between Pin 2 (CAN 0 H) and Pin 1 (CAN 0 L). This should be 120 ohm. 3. Check the plug connection on the control unit as well as the pins for discolouration.
			24	Logical error/software	CAN communication - logical SW error - faulty message	1. Change ignition 2. Check the terminal resistance from CAN 0 on diagnostic connector X001 between Pin 2 (CAN 0 H) and Pin 1 (CAN 0 L). This should be 120 ohm. 3. Check the plug connection on the control unit as well as the pins for discolouration.
082	CAN communication	518082	19	Faulty communication between components	CAN communication - MVCU machine control, received data with error status, message memory overflow	1. Change ignition 2. Check the terminal resistance from CAN 0 on diagnostic connector X001 between Pin 2 (CAN 0 H) and Pin 1 (CAN 0 L). This should be 120 ohm. 3. Check the plug connection on the control unit as well as the pins for discolouration.

Code	Designation	SPN	FMI	Alarm text	Information text What kind of error has occurred?	Error diagnosis text
976	Toggle switch error	518976	3	Signal range exceeded or short circuit against positive supply voltage	S027: Front socket activation switch - short circuit to plus - Signal 1 and 2	Check the supply voltage of keypad D00x: 1. Check the signal line of keypad D00x Pin 1 via fuse F032 (5A) to clamp 15. 2. Check the signal line keypad D00x Pin 2 to earth. 3. Replace keypad.
			7	Missing response of mechanical system or incorrect setting	S027: Front socket activation switch - missing response of mechanical system - Signal 1	Check the supply voltage of keypad D00x: 1. Check the signal line of keypad D00x Pin 1 via fuse F032 (5A) to clamp 15. 2. Check the signal line keypad D00x Pin 2 to earth. 3. Replace keypad.
			26	Signal outside the valid range	S027: Front socket activation switch - signal outside of valid range - Signal 1 and 2	Check the supply voltage of keypad D00x: 1. Check the signal line of keypad D00x Pin 1 via fuse F032 (5A) to clamp 15. 2. Check the signal line keypad D00x Pin 2 to earth. 3. Replace keypad.
			27	Open circuit or short circuit to earth	S027: Front socket activation switch - open circuit or short circuit to ground - Signal 1 and 2	Check the supply voltage of keypad D00x: 1. Check the signal line of keypad D00x Pin 1 via fuse F032 (5A) to clamp 15. 2. Check the signal line keypad D00x Pin 2 to earth. 3. Replace keypad.
			31	Fault condition fulfilled	S027: Front socket activation switch - Signal 2 - error condition satisfied	Check the supply voltage of keypad D00x: 1. Check the signal line of keypad D00x Pin 1 via fuse F032 (5A) to clamp 15. 2. Check the signal line keypad D00x Pin 2 to earth. 3. Replace keypad.
016	Joystick touch button front socket	519016	7	Missing response of mechanical system or incorrect setting	S067: Front socket activation switch - missing response of mechanical system or incorrect setting	Check the supply voltage for the joystick: 1. Check the line from joystick D002 Pin 2 to XP03 Pin 7 via fuse F010 (3A) to clamp 30. 2. Check the line from joystick D002 Pin 3 to XP06 Pin 9 via fuse F032 (5A) to clamp 15. 3. Check the line from Joystick D002 Pin 1 to ground. 4. Exchange joystick.
			26	Signal outside the valid range	S067: Front socket step circuit - signal outside valid range	Check the supply voltage for the joystick: 1. Check the line from joystick D002 Pin 2 to XP03 Pin 7 via fuse F010 (3A) to clamp 30. 2. Check the line from joystick D002 Pin 3 to XP06 Pin 9 via fuse F032 (5A) to clamp 15. 3. Check the line from Joystick D002 Pin 1 to ground. 4. Exchange joystick.
			31	Fault condition fulfilled	S067: Front socket step circuit - Signal - error condition satisfied	Check the supply voltage for the joystick: 1. Check the line from joystick D002 Pin 2 to XP03 Pin 7 via fuse F010 (3A) to clamp 30. 2. Check the line from joystick D002 Pin 3 to XP06 Pin 9 via fuse F032 (5A) to clamp 15. 3. Check the line from Joystick D002 Pin 1 to ground. 4. Exchange joystick.

Code	Designation	SPN	FMI	Alarm text	Information text What kind of error has occurred?	Error diagnosis text
765	Front socket activation error	519765	3	Signal range exceeded or short circuit against positive supply voltage	K016: Front socket activation switch - short circuit to plus	1. Check signal line of the activation relay front socket K016 Pin 3 up to control unit N032 Pin J1 (OUT 0). 2. Check signal line of the activation relay front socket K016 Pin 5 up to control unit N032 outlet Pin B1 (SGND OUT). 3. Check the signal line of the active relay front socket K016 Pin 1 via fuse F059 (30A) to clamp 30. 4. Check signal line of the activation relay front socket K016 Pin 2 up to control unit N032 Pin E3. 5. If the relay has been actuated, there should be a battery voltage at control unit N032 Pin E3.
			4	Under signal range or short circuit against machine ground / sensor ground	K016: Front socket activation switch - short circuit to ground	1. Check signal line of the activation relay front socket K016 Pin 3 up to control unit N032 Pin J1 (OUT 0). 2. Check signal line of the activation relay front socket K016 Pin 5 up to control unit N032 outlet Pin B1 (SGND OUT). 3. Check the signal line of the active relay front socket K016 Pin 1 via fuse F059 (30A) to clamp 30. 4. Check signal line of the activation relay front socket K016 Pin 2 up to control unit N032 Pin E3. 5. If the relay has been actuated, there should be a battery voltage at control unit N032 Pin E3.
844	Switching relay chute FF (G)	519844	3	Signal range exceeded or short circuit against positive supply voltage	K095: Front socket left-right (A-B) - Short circuit to plus	1. Check signal line of the relay front socket K095 Pin 3 up to control unit N032 outlet Pin H1. 2. Check signal line of the relay front socket K095 Pin 5 up to control unit N032 outlet Pin A1 (SGND OUT). 3. Check signal line of the relay front socket K095 Pin 1 up to activation relay K016 Pin 2. 4. Check signal line of the relay front socket K095 Pin 2 up to the 14-pole front socket XX03 Pin G. 5. If activation relay K016 and relay K095 have been actuated, there should be a battery voltage at control unit N032 Pin G.
			4	Under signal range or short circuit against machine ground / sensor ground	K095: Front socket left-right (A-B) - Short circuit to ground	1. Check signal line of the relay front socket K095 Pin 3 up to control unit N032 outlet Pin H1. 2. Check signal line of the relay front socket K095 Pin 5 up to control unit N032 outlet Pin A1 (SGND OUT). 3. Check signal line of the relay front socket K095 Pin 1 up to activation relay K016 Pin 2. 4. Check signal line of the relay front socket K095 Pin 2 up to the 14-pole front socket XX03 Pin G. 5. If activation relay K016 and relay K095 have been actuated, there should be a battery voltage at control unit N032 Pin G.

Code	Designation	SPN	FMI	Alarm text	Information text What kind of error has occurred?	Error diagnosis text
845	Switching relay chute FF (H)	519845	3	Signal range exceeded or short circuit against positive supply voltage	K096: Front socket left-right (A-B) - Short circuit to plus	1. Check signal line of the relay front socket K096 Pin 3 up to control unit N032 outlet Pin G1. 2. Check signal line of the relay front socket K096 Pin 5 up to control unit N032 outlet Pin A1 (SGND OUT). 3. Check signal line of the relay front socket K096 Pin 1 up to activation relay K016 Pin 2. 4. Check signal line of the relay front socket K096 Pin 2 up to the 14-pole front socket XX03 Pin H. 5. If activation relay K016 and relay K096 have been actuated, there should be a battery voltage at control unit N032 Pin H.
			4	Under signal range or short circuit against machine ground / sensor ground	K096: Front socket left-right (A-B) - Short circuit to ground	1. Check signal line of the relay front socket K096 Pin 3 up to control unit N032 outlet Pin G1. 2. Check signal line of the relay front socket K096 Pin 5 up to control unit N032 outlet Pin A1 (SGND OUT). 3. Check signal line of the relay front socket K096 Pin 1 up to activation relay K016 Pin 2. 4. Check signal line of the relay front socket K096 Pin 2 up to the 14-pole front socket XX03 Pin H. 5. If activation relay K016 and relay K096 have been actuated, there should be a battery voltage at control unit N032 Pin H.
846	Switching relay chute RIGHT (C)	519846	3	Signal range exceeded or short circuit against positive supply voltage	K097: Front socket left-right (A-B) - Short circuit to plus	1. Check signal line of the relay front socket K097 Pin 3 up to control unit N032 outlet Pin F1. 2. Check signal line of the relay front socket K097 Pin 5 up to control unit N032 outlet Pin A1 (SGND OUT). 3. Check signal line of the relay front socket K097 Pin 1 up to activation relay K016 Pin 2. 4. Check signal line of the relay front socket K097 Pin 2 up to the 14-pole front socket XX03 Pin C. 5. If activation relay K016 and relay K097 have been actuated, there should be a battery voltage at control unit N032 Pin C.
			4	Under signal range or short circuit against machine ground / sensor ground	K097: Front socket left-right (A-B) - Short circuit to ground	1. Check signal line of the relay front socket K097 Pin 3 up to control unit N032 outlet Pin F1. 2. Check signal line of the relay front socket K097 Pin 5 up to control unit N032 outlet Pin A1 (SGND OUT). 3. Check signal line of the relay front socket K097 Pin 1 up to activation relay K016 Pin 2. 4. Check signal line of the relay front socket K097 Pin 2 up to the 14-pole front socket XX03 Pin C. 5. If activation relay K016 and relay K097 have been actuated, there should be a battery voltage at control unit N032 Pin C.

Code	Designation	SPN	FMI	Alarm text	Information text What kind of error has occurred?	Error diagnosis text
847	Switching relay chute LEFT (D)	519847	3	Signal range exceeded or short circuit against positive supply voltage	K098: Front socket left-right (A-B) - Short circuit to plus	1. Check signal line of the relay front socket K098 Pin 3 up to control unit N032 outlet Pin E1. 2. Check signal line of the relay front socket K098 Pin 5 up to control unit N032 outlet Pin A1 (SGND OUT). 3. Check signal line of the relay front socket K098 Pin 1 up to activation relay K016 Pin 2. 4. Check signal line of the relay front socket K098 Pin 2 up to the 14-pole front socket XX03 Pin D. 5. If activation relay K016 and relay K098 have been actuated, there should be a battery voltage at control unit N032 Pin D.
			4	Under signal range or short circuit against machine ground / sensor ground	K098: Front socket left-right (A-B) - Short circuit to ground	1. Check signal line of the relay front socket K098 Pin 3 up to control unit N032 outlet Pin E1. 2. Check signal line of the relay front socket K098 Pin 5 up to control unit N032 outlet Pin A1 (SGND OUT). 3. Check signal line of the relay front socket K098 Pin 1 up to activation relay K016 Pin 2. 4. Check signal line of the relay front socket K098 Pin 2 up to the 14-pole front socket XX03 Pin D. 5. If activation relay K016 and relay K098 have been actuated, there should be a battery voltage at control unit N032 Pin D.
849	Switching relay chute DOWN (F)	519849	3	Signal range exceeded or short circuit against positive supply voltage	K100: Front socket left-right (A-B) - Short circuit to plus	1. Check signal line of the relay front socket K100 Pin 3 up to control unit N032 outlet Pin D1. 2. Check signal line of the relay front socket K100 Pin 5 up to control unit N032 outlet Pin B1 (SGND OUT). 3. Check signal line of the relay front socket K100 Pin 1 up to activation relay K016 Pin 2. 4. Check signal line of the relay front socket K100 Pin 2 up to the 14-pole front socket XX03 Pin F. 5. If activation relay K016 and relay K100 have been actuated, there should be a battery voltage at control unit N032 Pin F.
			4	Under signal range or short circuit against machine ground / sensor ground	K100: Front socket left-right (A-B) - Short circuit to ground	1. Check signal line of the relay front socket K100 Pin 3 up to control unit N032 outlet Pin D1. 2. Check signal line of the relay front socket K100 Pin 5 up to control unit N032 outlet Pin B1 (SGND OUT). 3. Check signal line of the relay front socket K100 Pin 1 up to activation relay K016 Pin 2. 4. Check signal line of the relay front socket K100 Pin 2 up to the 14-pole front socket XX03 Pin F. 5. If activation relay K016 and relay K100 have been actuated, there should be a battery voltage at control unit N032 Pin F.

Code	Designation	SPN	FMI	Alarm text	Information text What kind of error has occurred?	Error diagnosis text
850	Switching relay chute UP (F)	519850	3	Signal range exceeded or short circuit against positive supply voltage	K101: Front socket left-right (A-B) - Short circuit to plus	1. Check signal line of the relay front socket K101 Pin 3 up to control unit N032 outlet Pin C1. 2. Check signal line of the relay front socket K101 Pin 5 up to control unit N032 outlet Pin B1 (SGND OUT). 3. Check signal line of the relay front socket K101 Pin 1 up to activation relay K016 Pin 2. 4. Check signal line of the relay front socket K101 Pin 2 up to the 14-pole front socket XX03 Pin E. 5. If activation relay K016 and relay K101 have been actuated, there should be a battery voltage at control unit N032 Pin E.
			4	Under signal range or short circuit against machine ground / sensor ground	K101: Front socket left-right (A-B) - Short circuit to ground	1. Check signal line of the relay front socket K101 Pin 3 up to control unit N032 outlet Pin C1. 2. Check signal line of the relay front socket K101 Pin 5 up to control unit N032 outlet Pin B1 (SGND OUT). 3. Check signal line of the relay front socket K101 Pin 1 up to activation relay K016 Pin 2. 4. Check signal line of the relay front socket K101 Pin 2 up to the 14-pole front socket XX03 Pin E. 5. If activation relay K016 and relay K101 have been actuated, there should be a battery voltage at control unit N032 Pin E.
851	Push button step-by-step relay (J)	519851	3	Signal range exceeded or short circuit against positive supply voltage	K102: Front socket step circuit - short circuit to plus	1. Check signal line of the relay front socket K102 Pin 3 up to control unit N032 outlet Pin K1. 2. Check signal line of the relay front socket K102 Pin 5 up to control unit N032 outlet Pin B1 (SGND OUT). 3. Check signal line of the relay front socket K102 Pin 1 up to activation relay K016 Pin 2. 4. Check signal line of the relay front socket K102 Pin 2 up to the 14-pole front socket XX03 Pin J. 5. If activation relay K016 and relay K102 have been actuated, there should be a battery voltage at control unit N032 Pin J.
			4	Under signal range or short circuit against machine ground / sensor ground	K102: Front socket step circuit - short circuit to ground	1. Check signal line of the relay front socket K102 Pin 3 up to control unit N032 outlet Pin K1. 2. Check signal line of the relay front socket K102 Pin 5 up to control unit N032 outlet Pin B1 (SGND OUT). 3. Check signal line of the relay front socket K102 Pin 1 up to activation relay K016 Pin 2. 4. Check signal line of the relay front socket K102 Pin 2 up to the 14-pole front socket XX03 Pin J. 5. If activation relay K016 and relay K102 have been actuated, there should be a battery voltage at control unit N032 Pin J.

23 Central lubrication system

23.1 Central lubrication system

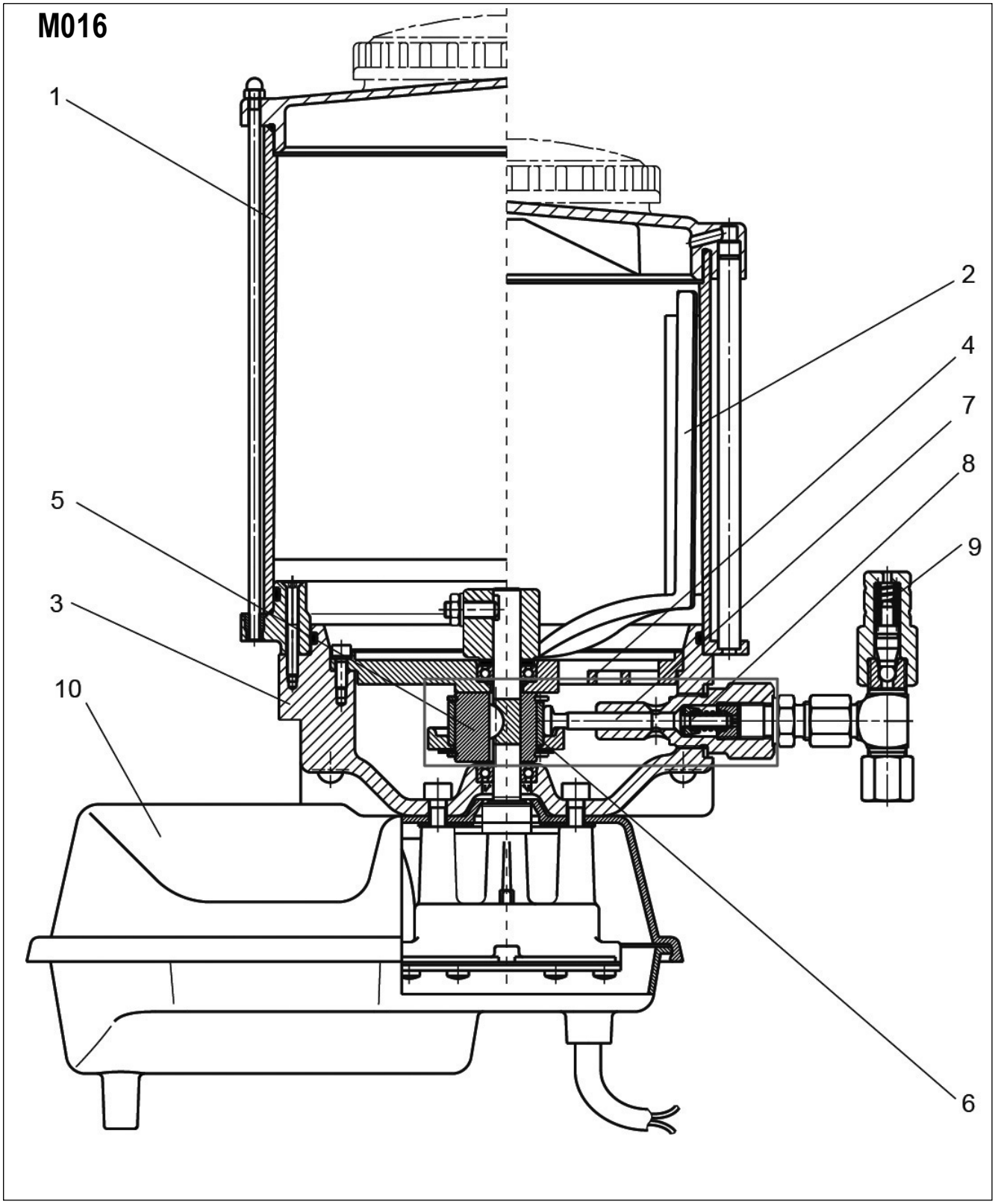

Pos.	Component	Designation
M016	Central lubrication system	BEKA-MAX EP-1 / S-EP 4

Pos.	Component
1	Reservoir
2	Agitator blade
3	Pump housing
4	Screen plate
5	Eccentric
6	Thrust ring
7	Delivery piston
8	Non-return valve
9	Pressure limiting valve
10	DC motor

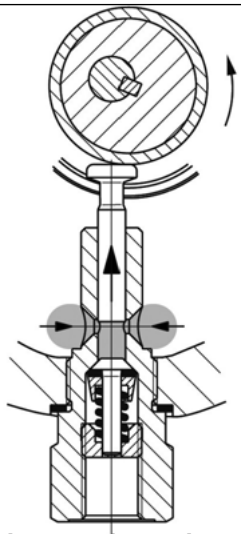

Pump element draws in

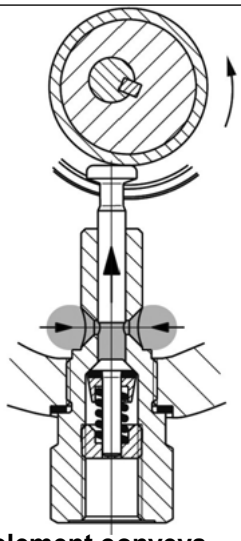

Pump element conveys

Mode of operation of electrical pump EP-1

A DC motor **10** continuously drives the eccentric **5** with thrust ring **6**. The eccentricity produces the suction and pressure stroke of the delivery piston **7** and the integrated non-return valve **8** prevents reverse pumping of the conveyed medium from the main line.

The agitator blade **2** pushes the lubricant out of the reservoir **1**. It is conveyed through a screen plate **4**, which reduces the air bubbles, into the intake area in the pump housing **3**. A wiper on the agitator blade **3** enables visual monitoring of the quantity of grease still present in the transparent reservoir **1**. The overpressure valve **9** is pre-set to 280 bar (4061.1 psi).

Integrated electronic control S-EP 4

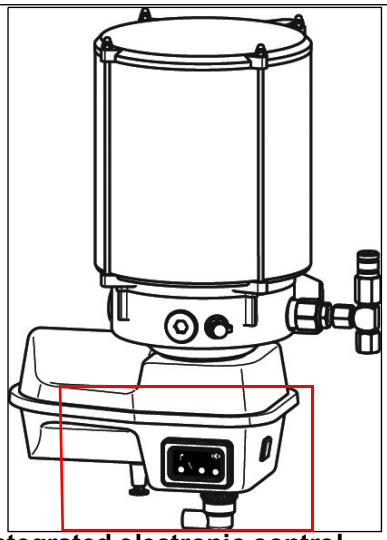

Integrated electronic control

The electronic control unit S-EP 4 enables time-dependent control of the central lubrication system.

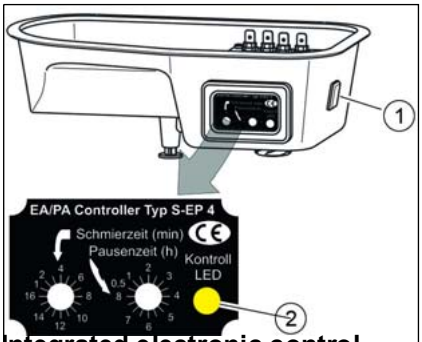

Integrated electronic control

After switching on the ignition, the yellow LED **2** illuminates for 1.5 sec. and indicates that the control is ready for operation (switch-on control).

Whenever the control is initially connected a lubrication process begins, and the yellow LED **2** in the control half-shell is illuminated throughout the lubrication process.

The integrated electronic control unit S-EP 4 has a data memory. This enables the storage of elapsed times, among other things.

The time is taken and saved if the starter is switched off during lubrication or during a break. After restarting the ignition, the remaining lubrication time or break times are read out of the memory and the operating sequence is continued from the point at which it was interrupted. When the ignition is switched on, an intermediate lubrication cycle can be triggered at any time by pressing push button **1** on the side of the pump motor housing. This also enables a functional check. The pump then immediately starts a lubrication cycle, the stored lubrication or break times which have elapsed so far are reset and start again.

If a fault occurs in the lubrication system it can be reset, provided it has been eliminated, by pressing the intermediate lubrication button. The pump starts a new lubrication process.

Time control

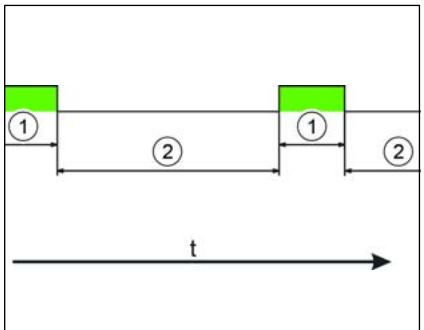

Diagram of the cycle sequence

Break and lubrication times can be set with the time-dependent control of the central lubrication system. Break times are the periods between two lubrication times.

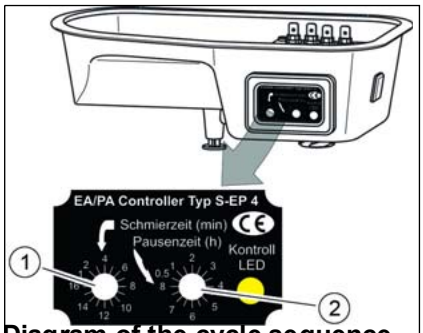

Diagram of the cycle sequence

The break and lubrication times can be set with the aid of indexing switches in the inspection wiindow of the control. To set the time, remove the red frame from the pump motor protective housing with a flat screwdriver, loosen the four cross-head screws, then remove the transparent protective cover. The break and lubrication times can be adjusted with a flat screwdriver. In the event of incorrect wear of the cover, water will be able to penetrate the control, causing irreparable damage. The warranty will become void in this case.

Setting the parameters

Lubrication times 1: 1 to 16 min. (16 notches of 1min each.)

Break times: 0.5 to 8 h (16 notches of 0.5 h each)

Summary of signal indicators

The pump functions are displayed via the yellow LED control indicator in the inspection window of the motor half-shell of the pump.

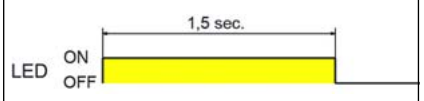

Operational readiness indicator

When the ignition is switched on, the central lubrication system is started via terminal 15. Correct booting of the control is indicated by the yellow LED in the inspection window. This then lights up for 1.5 sec.

Lubrication cycle indicator

During operation the yellow LED lights up when a lubrication operation occurs. When a lubrication cycle is performed, the LED flashes during this period at a 0.5 sec. interval.

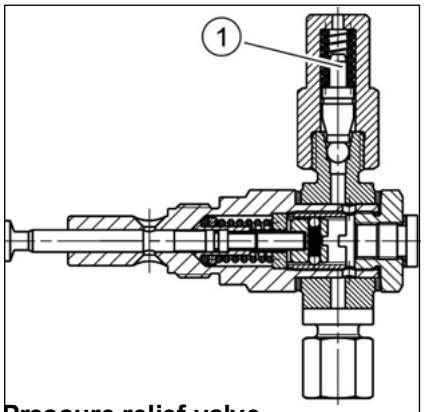

Pressure relief valve

The working pressure of 280 bar (4061.1 psi) is set on the pressure limiting valve in the factory. This setting cannot and must not be changed. A working pressure of 280 bar (4061.1 psi) is more than sufficient for conveying commercially available greases up to NLGI-Cl.2, with an intact lubrication system.

Progressive distributor MX-F

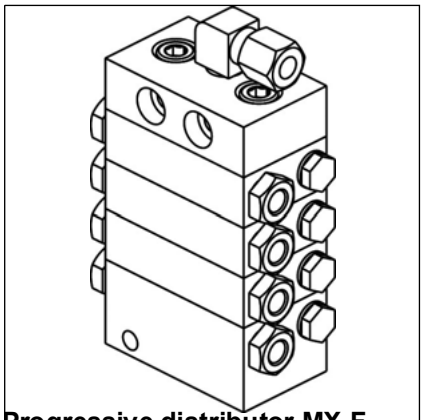

Progressive distributor MX-F

Function description

Progressive piston distributors are distributors with a hydraulic sequential control whose pistons are controlled with fed lubricant, so that the lubricant is forced to emerge from the individual outlets in succession. If faults occur in the course of the lubricant flow, e.g. obstruction of the lubrication lines or lubrication points, then the distributors will lock. This locking is used to monitor the distributors. The lubricant escapes at the pressure limiting valve on automatic pumps, such as electrical pump EP-1.

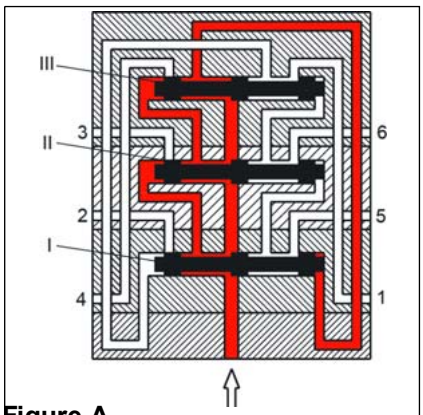

Figure A

The coolant flows via the distributor inlet through all distributor discs to the piston **I** (Fig.. A). Piston **I** is pushed to the left and the lubricant is pressed out of the left pressure chamber of the delivery piston to the outlet **1** (Fig. B)

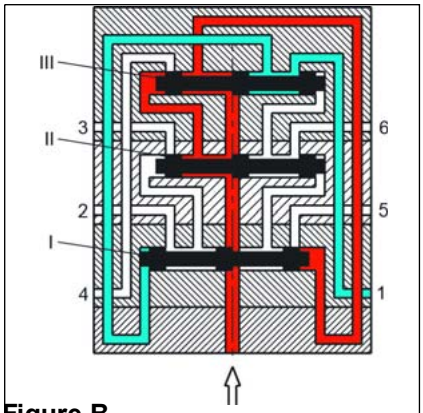

Figure B

The dosing pistons **II** and **III** are then progressively pushed and the lubricant is conveyed to outlets **2** and **3**. After piston **III** has been pushed, the lubricant is conveyed to the left-hand side of the delivery piston **I** (Fig.C) and out of the right pressure chamber of the delivery piston to outlet **4**. Delivery pistons **II** and **III** are then pushed and the lubricant is pressed to outlets **5** and **6**.

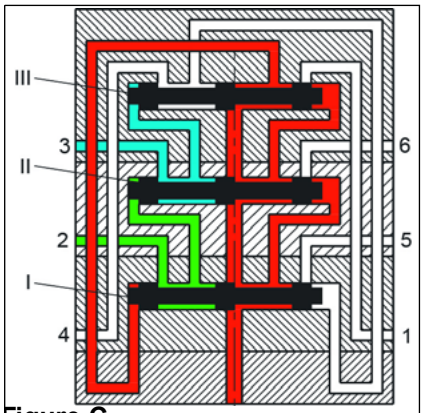

Figure C

After delivery piston III has been pushed, the lubricant is again conveyed to the right-hand side of the delivery piston (Fig .A) and the progressive piston distributor starts a new cycle. The described function is repeated as long as lubricant is fed to the progressive distributor.

23.2 Central lubrication system: Lubrication plan

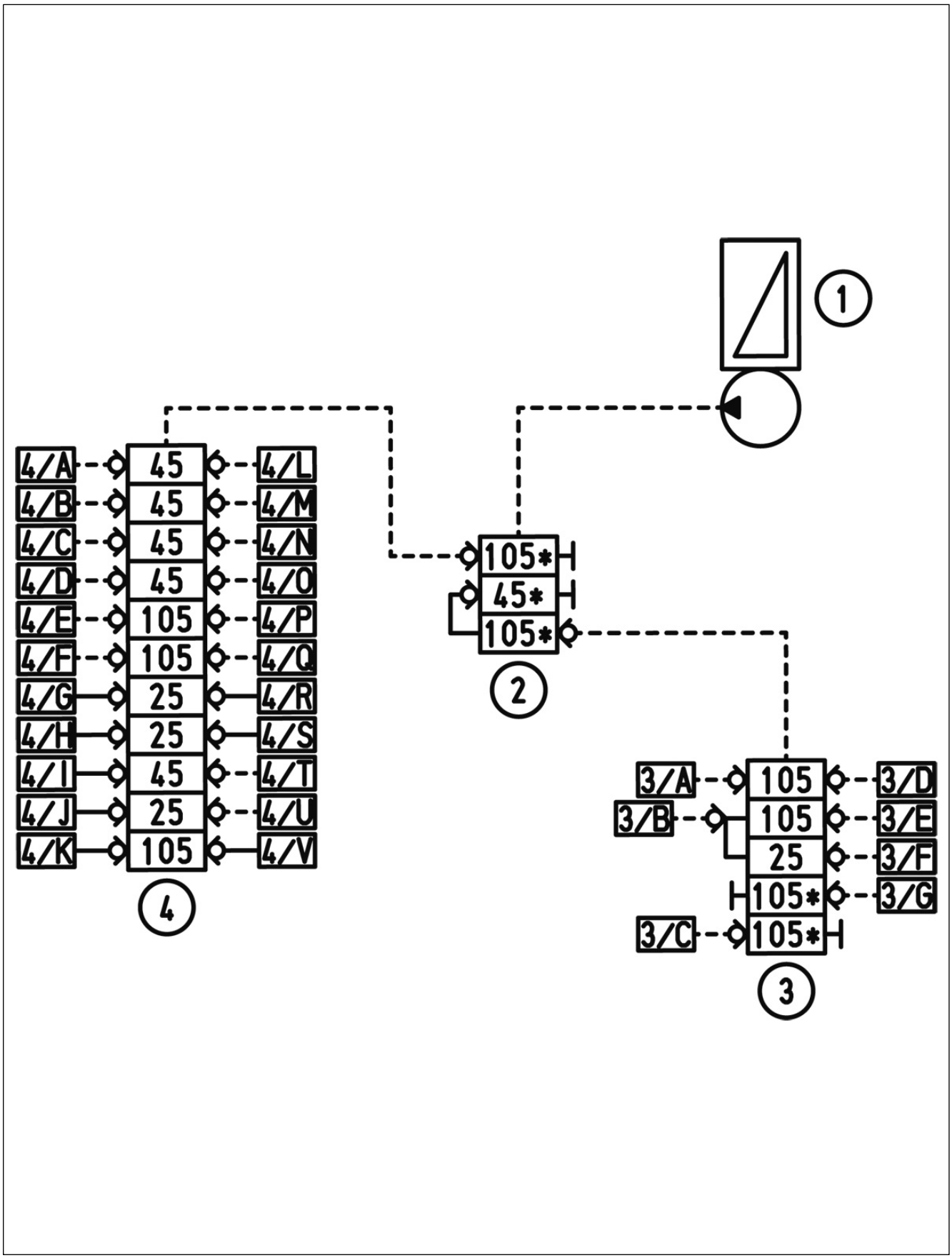

23.3 Central lubrication system: Lubrication points

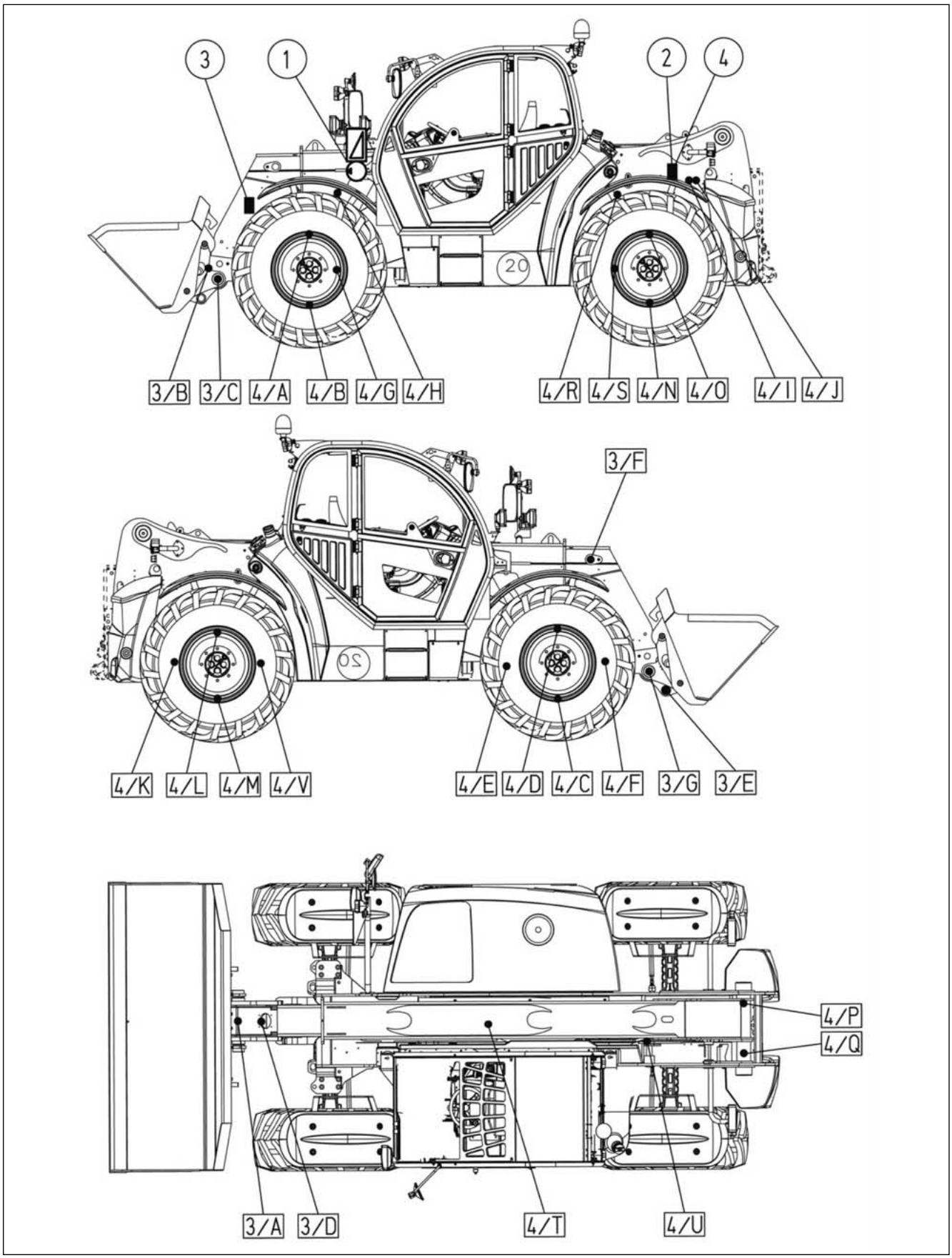

KRAMER-WERKE GmbH keep abreast of the latest technical developments and constantly improve their products. For this reason, we may from time to time need to make changes to figures and descriptions in this documentation that do not reflect products that have already been delivered and that will not be implemented on these machines.

Technical data, dimensions and weights are only given as an indication. Responsibility for errors or omissions not accepted.

No reproduction or translation of this publication, in whole or part, without the written consent of KRAMER-WERKE GmbH.

All rights under the provision of the Copyright Act are reserved.

Kramer-Werke GmbH

Wacker-Neuson-Str. 1

D-88630 Pfullendorf
Germany

Wacker Neuson SE
Preussenstr. 41
D-80809 München
Phone +49 89 35402-0
Fax +49 89 35402-390

Order no. 1000363144
Language [en]